FAULHABER

Drive Systems

Standard product portfolio
Edition 2024, Apr. 15

WE CREATE MOTION

EN

Drive Systems Overview

DC-Motors

- FAULHABER S/G
- FAULHABER SR
- FAULHABER CXR
- FAULHABER CR
- FAULHABER SR-Flat

Brushless DC-Motors

- FAULHABER B-Micro
- FAULHABER B
- FAULHABER BHx
- FAULHABER BX4
- FAULHABER BP4
- FAULHABER B-Flat
- FAULHABER BXT

Motors with integrated Electronics

- FAULHABER BRC
- FAULHABER BX4 SC
- FAULHABER BXT SC
- FAULHABER B-Flat SC
- FAULHABER IMC
- FAULHABER MCS

Stepper Motors

- FAULHABER Steppers

Linear DC-Servomotors

- FAULHABER Linear DC-Servomotors

Precision Gearheads

- Precision Gearheads
- FAULHABER GPT

Linear Components

- Direct Drive Linear Actuators
- Geared Linear Actuators

Encoders

- Incremental encoders
- Absolute encoders

Drive Electronics

- Speed Controllers
- Motion Controllers

Accessories

- Accessories

General Index

DC-Motors

FAULHABER S/G

0615...S	0.17	mNm
1219...G	0.72	mNm
1516...S	0.59	mNm
1624...S	2	mNm
2230...S	4.7	mNm
2233...S	5.9	mNm

FAULHABER SR

0816...SR	0.7	mNm
1016...SR	0.92	mNm
1024...SR	1.6	mNm
1224...SR	1.7	mNm
1319...SR	1.32	mNm
1331...SR	3.44	mNm
1516...SR	0.918	mNm
1524...SR	2.87	mNm
1717...SR	1.86	mNm
1724...SR	4.13	mNm
2224...SR	6.29	mNm
2232...SR	10	mNm

FAULHABER CXR

1336...CXR	3.6	mNm
1727...CXR	4.9	mNm
1741...CXR	8.8	mNm
2237...CXR	12	mNm
2642...CXR	26	mNm
2657...CXR	40	mNm

FAULHABER CR

2342...CR	20.5	mNm
2642...CR	32	mNm
2657...CR	51.1	mNm
2668...CR	70	mNm
3242...CR	41	mNm
3257...CR	73.1	mNm
3272...CR	125	mNm
3863...CR	137	mNm
3890...CR	224	mNm

FAULHABER SR-Flat

1506...SR	0.44	mNm
1506...SR IE2-8	0.4	mNm
1512...SR	30	mNm
1512...SR IE2-8	30	mNm
2607...SR	3.4	mNm
2607...SR IE2-16	2.9	mNm
2619...SR	100	mNm
2619...SR IE2-16	100	mNm

Brushless DC-Motors

FAULHABER B-Micro

0308...B	18	µNm
0515...B	0.13	mNm

FAULHABER B

0620...B	0.36	mNm
0824...B	1.1	mNm
1028...B	2.2	mNm
1218...B	1.2	mNm
1226...B	2.6	mNm
1628...B	3.3	mNm
2036...B	7.2	mNm
2057...B	19.5	mNm
2057...BA	18.7	mNm
2444...B	18	mNm
3056...B	33	mNm
3564...B	66	mNm
4490...B	190	mNm
4490...BS	217	mNm

FAULHABER BHx

1645...BHS	8	mNm
1660...BHS	15.9	mNm
1660...BHT	18.7	mNm

FAULHABER BX4

2232...BX4	18	mNm
2250...BX4	32	mNm
3242...BX4	53	mNm
3268...BX4	96	mNm

FAULHABER BP4

2264...BP4	59	mNm
3274...BP4	158	mNm

FAULHABER B-Flat

1509...B	0.5	mNm
1515...B	30	mNm
2610...B	3.1	mNm
2622...B	100	mNm

FAULHABER BXT

2214...BXT R	10.2	mNm
2214...BXT H	9.7	mNm
3216...BXT R	41.0	mNm
3216...BXT H	38.0	mNm
4221...BXT R	134.0	mNm
4221...BXT H	112.0	mNm

Motors with integrated Electronics

FAULHABER BRC

1525...BRC	1.9	mNm
1935...BRC	4.4	mNm
3153...BRC	36.5	mNm

FAULHABER BX4 SC

2232...BX4 SC	17.5	mNm
2250...BX4 SC	25	mNm
3242...BX4 SC	60	mNm
3242...BX4 SCDC	45	mNm
3268...BX4 SC	99	mNm
3268...BX4 SCDC	60	mNm

FAULHABER BXT SC

2214...BXTH SC	10	mNm
3216...BXTH SC	35	mNm
4221...BXTH SC	92	mNm

FAULHABER B-FLAT SC

2610...B SC	3.12	mNm
2622...B SC	100	mNm

FAULHABER IMC

2232...BX4 IMC RS/CO	18	mNm
2250...BX4 IMC RS/CO	27	mNm

FAULHABER MCS

MCS 3242...BX4 RS/CO	76	mNm
MCS 3242...BX4 ET	76	mNm
MCS 3268...BX4 RS/CO	96	mNm
MCS 3268...BX4 ET	96	mNm
MCS 3274...BP4 RS/CO	160	mNm
MCS 3274...BP4 ET	160	mNm

Stepper Motors

DM0620	0.25	mNm
AM0820	0.65	mNm
AM1020	1.6	mNm
DM1220	2.4	mNm
AM1524	6	mNm
AM2224	22	mNm
AM2224R3	22	mNm
AM3248	85	mNm
DM40100R	62	mNm
DM52100N	200	mNm
DM52100R	180	mNm
DM52100S	116	mNm
DM66200H	307	mNm

Linear DC-Servomotors

LM 0830...01	1.03	N
LM 1247...11	3.6	N
LM 1247...12	3.6	N
LM1483...11	6.2	N
LM1483...12	6.2	N
LM 2070...11	9.2	N
LM 2070...12	9.2	N

Precision Gearheads

03B	0.88	mNm
06A	25	mNm
06/1	25	mNm
08/1	60	mNm
08/2	15	mNm
08/3	15	mNm
10/1	0.1	Nm
12/3	0.03	Nm
12/4	0.3	Nm
12/5	0.03	Nm
13A	0.18	Nm
14/1	0.3	Nm
15A	0.25	Nm
15/5	0.1	Nm
15/5 S	0.1	Nm
15/8	0.1	Nm
15/10	0.35	Nm
16A	0.03	Nm
16/5	0.1	Nm
16/5 S	0.1	Nm
16/7	0.3	Nm
16/8	0.1	Nm
17/1	0.55	Nm
20/1R	0.8	Nm
22E	0.6	Nm
22EKV	1.2	Nm
22/2	0.1	Nm
22/5	0.1	Nm
22/7	0.7	Nm
23/1	0.7	Nm
26A	1	Nm
26/1R	3.5	Nm
30/1	4.5	Nm
30/1 S	4.5	Nm
32/3R	7	Nm
38/1	10	Nm
38/1 S	10	Nm
38/2	10	Nm
38/2 S	10	Nm
44/1	16	Nm

FAULHABER GPT

22GPT	1.8	Nm
32GPT	8	Nm
42GPT	18	Nm

Linear Actuators

M1,2 x 0,25 x L1
M1,6 x 0,35 x L1
M2 x 0,2 x L1
M3 x 0,5 x L1
Options

FAULHABER L

06L ... SL	12	N
06L ... HL	25	N
08L ... SL	23	N
08L ... HL	40	N
10L ... SL	40	N
22L ... ML	425	N
22L ... SB	580	N
22L ... PB	580	N
32L ... TL	1800	N
32L ... ML	1850	N
32L ... SB	1920	N
32L ... PB	1920	N

Encoders

Encoders - 2 Channel
PA2-50
PA2-100
IE2-400
IE2-1024
IEH2-4096
PE22-120
HEDS 5500

Encoders - 3 Channel
HXM3-64
IEM3-1024
IE3-1024
IE3-1024L
IEF3-4096
IEF3-4096L
IEH3-4096
IEH3-4096L
IEP3-4096
IERS3-500
IERS3-500L
IER3-10000
IER3-10000L
HEDL 5540

Encoders - Absolute
AESM-4096
AES-4096L
AEMT-12/16L

Drive Electronics

Speed Controller

SC 1801 P	1	A
SC 1801 F	1	A
SC 1801 S	1	A
SC 2402 P	2	A
SC 2804 S	4	A
SC 5004 P	4	A
SC 5008 S	8	A

Motion Controller

MC 3001 P	1.4	A
MC 3001 B	1	A
MC 3603 S	3	A
MC 5004 P	4	A
MC 5005 S	5	A
MC 5010 S	10	A
MCST 3601	1.1	A

Accessories

Adapter
Cables and other Accessories
Accessory Combination

Electronic filters
EFC 5008
EFM 5001/5003/5008
EFS 5004/3004

Brakes
MBZ
PMB32

Braking Chopper
BC5004

FAULHABER S/G

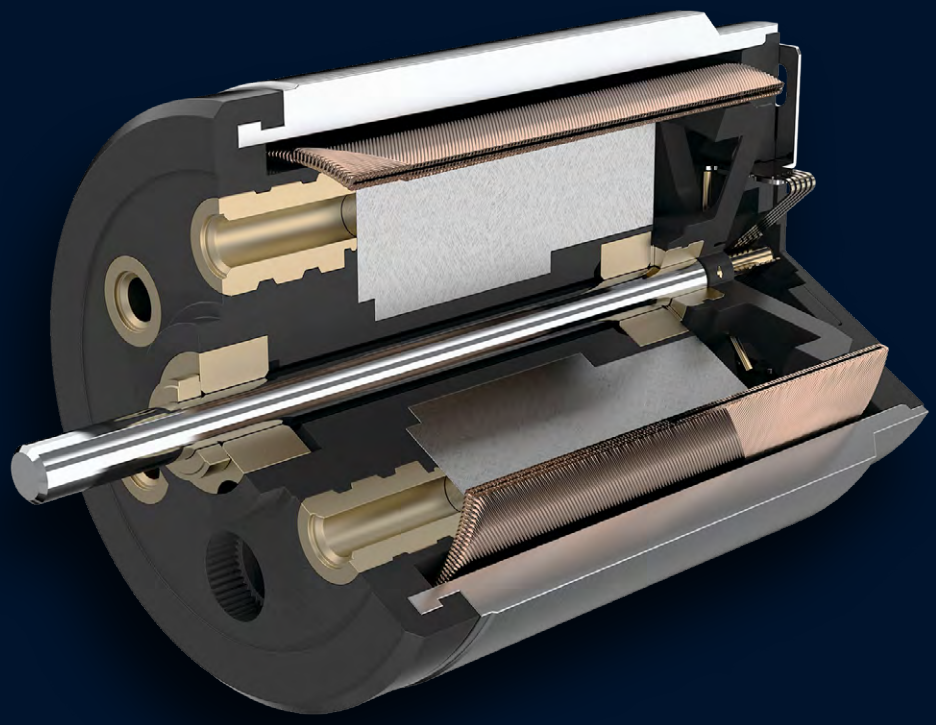

FAULHABER S/G

0615...S	Precious Metal Commutation	0.17 mNm
1219...G	Precious Metal Commutation	0.72 mNm
1516...S	Precious Metal Commutation	0.59 mNm
1624...S	Precious Metal Commutation	2 mNm
2230...S	Precious Metal Commutation	4.7 mNm
2233...S	Precious Metal Commutation	5.9 mNm

Backwards

DC-Micromotors

Precious Metal Commutation

0,17 mNm

0,5 W

Series 0615 ... S

Values at 22°C and nominal voltage	0615 N		1,5 S	003 S	4,5 S	
1 Nominal voltage	U_N		1,5	3	4,5	V
2 Terminal resistance	R		3,9	16,2	37,7	Ω
3 Efficiency, max.	$\eta_{max.}$		52	50	48	%
4 No-load speed	n_0		19 100	20 200	20 000	min^{-1}
5 No-load current, typ. (with shaft ø 0,8 mm)	I_0		0,03	0,016	0,012	A
6 Stall torque	M_H		0,24	0,22	0,21	mNm
7 Friction torque	M_R		0,02	0,02	0,02	mNm
8 Speed constant	k_n		13 840	7 346	4 872	min^{-1}/V
9 Back-EMF constant	k_E		0,072	0,136	0,205	mV/min^{-1}
10 Torque constant	k_M		0,69	1,3	1,96	mNm/A
11 Current constant	k_I		1,449	0,769	0,51	A/mNm
12 Slope of n-M curve	$\Delta n/\Delta M$		78 224	91 538	93 713	min^{-1}/mNm
13 Rotor inductance	L		12	39	95	µH
14 Mechanical time constant	τ_m		8	10	10	ms
15 Rotor inertia	J		0,01	0,01	0,01	gcm^2
16 Angular acceleration	$\alpha_{max.}$		244	221	213	$\cdot 10^3 rad/s^2$
17 Thermal resistance	R_{th1} / R_{th2}	35 / 76				K/W
18 Thermal time constant	τ_{w1} / τ_{w2}	2,6 / 110				s
19 Operating temperature range:						
– motor		-30 ... +85 (optional version -30 ... +125)				°C
– winding, max. permissible		+85 (optional version +125)				°C
20 Shaft bearings		sintered bearings				
21 Shaft load max.:						
– with shaft diameter		0,8				mm
– radial at 3 000 min^{-1} (1,5 mm from bearing)		0,5				N
– axial at 3 000 min^{-1}		0,1				N
– axial at standstill		20				N
22 Shaft play:						
– radial	≤	0,03				mm
– axial	≤	0,15				mm
23 Housing material		steel, black coated				
24 Mass		2				g
25 Direction of rotation		clockwise, viewed from the front face				
26 Speed up to	$n_{max.}$	24 000				min^{-1}
27 Number of pole pairs		1				
28 Magnet material		NdFeB				
Rated values for continuous operation						
29 Rated torque	M_N		0,17	0,16	0,15	mNm
30 Rated current (thermal limit)	I_N		0,29	0,14	0,092	A
31 Rated speed	n_N		2 500	2 500	2 500	min^{-1}

Note: Rated values are calculated with nominal voltage and at a 22°C ambient temperature. The R_{th2} value has been reduced by 0%.

Note:

The diagram indicates the recommended speed in relation to the available torque at the output shaft for a given ambient temperature of 22°C.

The diagram shows the motor in a completely insulated as well as thermally coupled condition (R_{th2} 50% reduced).

The nominal voltage (U_N) curve shows the operating point at nominal voltage in the insulated and thermally coupled condition. Any points of operation above the curve at nominal voltage will require a higher operating voltage. Any points below the nominal voltage curve will require less voltage.

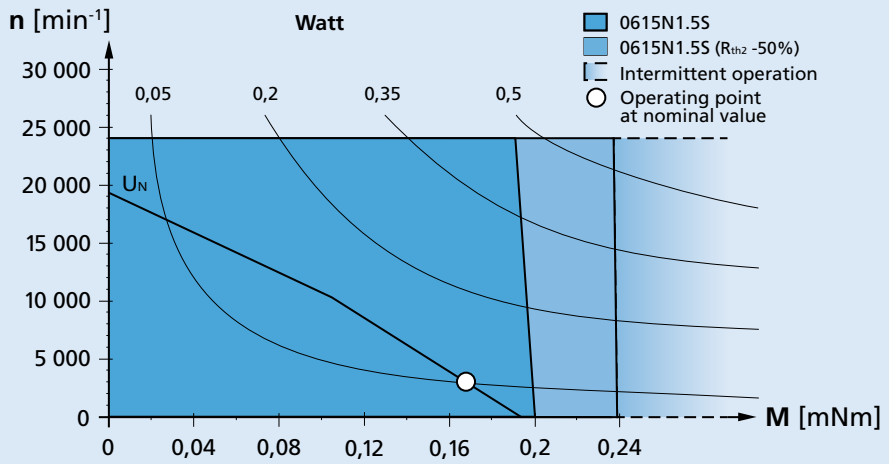

Recommended operation areas (example: nominal voltage 1,5V)

For notes on technical data and lifetime performance refer to "Technical Information".

Backwards

© DR. FRITZ FAULHABER GMBH & CO. KG
Specifications subject to change without notice.

Dimensional drawing

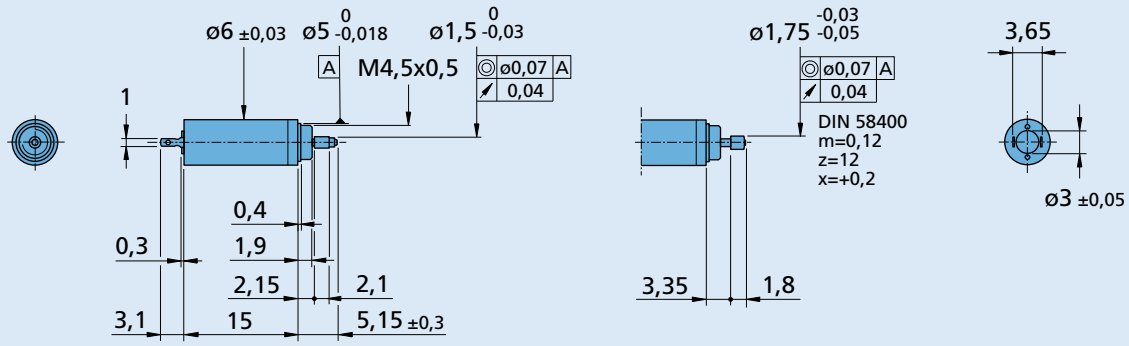

0615 N ... S

0615 C ... S
for Gearhead 06/1

Options

Example product designation: **0615N003S-K179**

Option	Type	Description
K179	Bearing lubrication	For vacuum of 10^{-5} Pa @ 22°C
K4066	Temperature range	Extended temperature range (-30…+125°C)
K1480	Second shaft end	Ø 0,8 mm x 4,5 mm
K1655	Encoder combination	Motor with rear end shaft for combination with Encoder PA2-50
K1707	Encoder combination	Motor with rear end shaft for combination with Encoder HXM3-64

Product combination

Precision Gearheads / Lead Screws	Encoders	Drive Electronics	Cables / Accessories
06/1 06L ... SL 06L ... HL	PA2-50 HXM3-64	SC 1801 P SC 1801 S MC 3001 B MC 3001 P	To view our large range of accessory parts, please refer to the "Accessories" chapter.

© DR. FRITZ FAULHABER GMBH & CO. KG
Specifications subject to change without notice.

DC-Micromotors

Precious Metal Commutation

0,72 mNm

2 W

Series 1219 ... G

Values at 22°C and nominal voltage	1219 N		4,5 G	006 G	012 G	015 G	
1 Nominal voltage	U_N		4,5	6	12	15	V
2 Terminal resistance	R		10,7	17,6	69	131	Ω
3 Efficiency, max.	$\eta_{max.}$		74	73	72	70	%
4 No-load speed	n_0		15 300	16 000	16 000	16 200	min^{-1}
5 No-load current, typ. (with shaft ø 0,8 mm)	I_0		0,008	0,007	0,004	0,003	A
6 Stall torque	M_H		1,14	1,17	1,19	0,96	mNm
7 Friction torque	M_R		0,02	0,02	0,03	0,03	mNm
8 Speed constant	k_n		3 460	2 721	1 364	1 109	min^{-1}/V
9 Back-EMF constant	k_E		0,289	0,368	0,733	0,902	mV/min^{-1}
10 Torque constant	k_M		2,76	3,51	7	8,61	mNm/A
11 Current constant	k_I		0,362	0,285	0,143	0,116	A/mNm
12 Slope of n-M curve	$\Delta n/\Delta M$		13 413	13 642	13 447	16 875	min^{-1}/mNm
13 Rotor inductance	L		150	300	1 200	1 600	µH
14 Mechanical time constant	τ_m		20	20	18	19	ms
15 Rotor inertia	J		0,14	0,14	0,13	0,11	gcm^2
16 Angular acceleration	$\alpha_{max.}$		81	84	92	87	$\cdot 10^3 rad/s^2$
17 Thermal resistance	R_{th1} / R_{th2}	17 / 48					K/W
18 Thermal time constant	τ_{w1} / τ_{w2}	3,5 / 386					s
19 Operating temperature range:							
– motor		-30 ... +85 (optional version -30 ... +125)					°C
– winding, max. permissible		+85 (optional version +125)					°C
20 Shaft bearings		sintered bearings					
21 Shaft load max.:							
– with shaft diameter		0,8					mm
– radial at 3 000 min^{-1} (1,5 mm from bearing)		0,5					N
– axial at 3 000 min^{-1}		0,1					N
– axial at standstill		20					N
22 Shaft play:							
– radial	≤	0,03					mm
– axial	≤	0,2					mm
23 Housing material		steel, nickel plated					
24 Mass		11					g
25 Direction of rotation		clockwise, viewed from the front face					
26 Speed up to	$n_{max.}$	19 000					min^{-1}
27 Number of pole pairs		1					
28 Magnet material		AlNiCo					
Rated values for continuous operation							
29 Rated torque	M_N		0,72	0,71	0,7	0,62	mNm
30 Rated current (thermal limit)	I_N		0,27	0,21	0,11	0,077	A
31 Rated speed	n_N		3 120	3 870	4 040	2 770	min^{-1}

Note: Rated values are calculated with nominal voltage and at a 22°C ambient temperature. The R_{th2} value has been reduced by 0%.

Note:

The diagram indicates the recommended speed in relation to the available torque at the output shaft for a given ambient temperature of 22°C.

The diagram shows the motor in a completely insulated as well as thermally coupled condition (R_{th2} 50% reduced).

The nominal voltage (U_N) curve shows the operating point at nominal voltage in the insulated and thermally coupled condition. Any points of operation above the curve at nominal voltage will require a higher operating voltage. Any points below the nominal voltage curve will require less voltage.

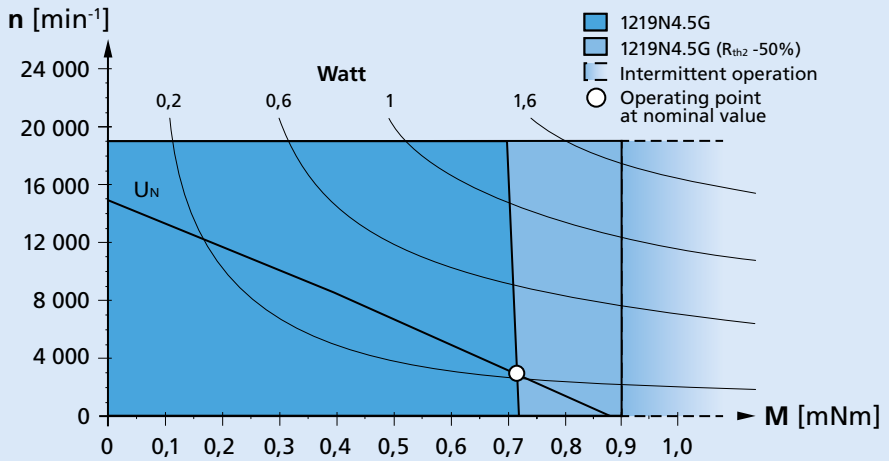

Recommended operation areas (example: nominal voltage 4,5V)

© DR. FRITZ FAULHABER GMBH & CO. KG
Specifications subject to change without notice.

Dimensional drawing

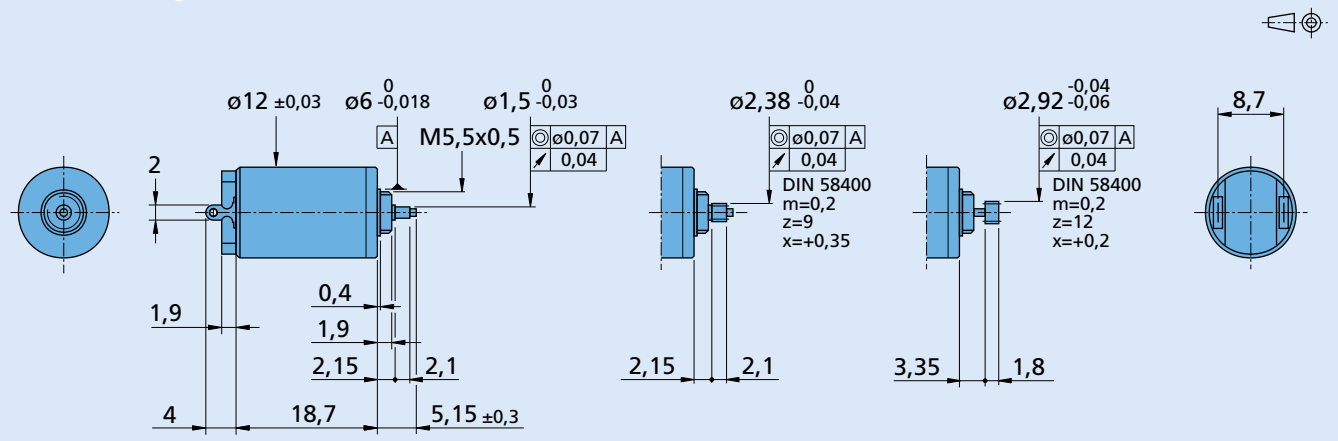

1219 N ... G

1219 E ... G
for Gearhead 12/3

1219 M ... G
for Gearhead 10/1

Options

Example product designation: **1219N012G-K179**

Option	Type	Description
K179	Bearing lubrication	For vacuum of 10^{-5} Pa @ 22°C
K4066	Temperature range	Extended temperature range (-30…+125°C)
K380	Second shaft end	Ø 1 mm x 3 mm
K440	Bearing	Front ball bearing

Product combination

Precision Gearheads / Lead Screws	Encoders	Drive Electronics	Cables / Accessories
10/1 12/3 10L ... SL		SC 1801 P SC 1801 S	To view our large range of accessory parts, please refer to the "Accessories" chapter.

© DR. FRITZ FAULHABER GMBH & CO. KG
Specifications subject to change without notice.

DC-Micromotors

Precious Metal Commutation

0,59 mNm

1,2 W

Series 1516 ... S

Values at 22°C and nominal voltage	1516 T		1,5 S	002 S	4,5 S	006 S	012 S	
1 Nominal voltage	U_N		1,5	2	4,5	6	12	V
2 Terminal resistance	R		1,11	3,25	14,7	31,2	115	Ω
3 Efficiency, max.	$\eta_{max.}$		59	48	50	45	47	%
4 No-load speed	n_0		14 400	14 200	15 000	15 000	15 600	min^{-1}
5 No-load current, typ. (with shaft ø 1,5 mm)	I_0		0,075	0,057	0,027	0,021	0,011	A
6 Stall torque	M_H		1,2	0,68	0,73	0,59	0,62	mNm
7 Friction torque	M_R		0,07	0,07	0,07	0,07	0,07	mNm
8 Speed constant	k_n		10 159	7 827	3 659	2 800	1 445	min^{-1}/V
9 Back-EMF constant	k_E		0,098	0,128	0,273	0,357	0,692	mV/min^{-1}
10 Torque constant	k_M		0,94	1,22	2,61	3,41	6,61	mNm/A
11 Current constant	k_I		1,064	0,82	0,383	0,293	0,151	A/mNm
12 Slope of n-M curve	$\Delta n/\Delta M$		12 000	20 800	20 600	25 600	25 100	min^{-1}/mNm
13 Rotor inductance	L		16	27	140	240	900	µH
14 Mechanical time constant	τ_m		39	45	56	56	60	ms
15 Rotor inertia	J		0,31	0,21	0,26	0,21	0,23	gcm^2
16 Angular acceleration	$\alpha_{max.}$		39	32	28	28	27	$\cdot 10^3 rad/s^2$
17 Thermal resistance	R_{th1} / R_{th2}	8 / 45						K/W
18 Thermal time constant	τ_{w1} / τ_{w2}	2 / 200						s
19 Operating temperature range:								
– motor		-30 ... +65 (optional version -30 ... +125)						°C
– winding, max. permissible		+65 (optional version +125)						°C
20 Shaft bearings		sintered bearings			ball bearings, preloaded			
21 Shaft load max.:		(standard)			(optional version)			
– with shaft diameter		1,5			1,5			mm
– radial at 3 000 min^{-1} (3 mm from bearing)		1,2			5			N
– axial at 3 000 min^{-1}		0,2			0,5			N
– axial at standstill		20			10			N
22 Shaft play:								
– radial	≤	0,03			0,015			mm
– axial	≤	0,2			0			mm
23 Housing material		steel, zinc galvanized and passivated						
24 Mass		10						g
25 Direction of rotation		clockwise, viewed from the front face						
26 Speed up to	$n_{max.}$	18 000						min^{-1}
27 Number of pole pairs		1						
28 Magnet material		AlNiCo						
Rated values for continuous operation								
29 Rated torque	M_N		0,59	0,47	0,49	0,41	0,43	mNm
30 Rated current (thermal limit)	I_N		0,7	0,45	0,21	0,14	0,077	A
31 Rated speed	n_N		6 290	2 500	2 980	2 500	2 500	min^{-1}

Note: Rated values are calculated with nominal voltage and at a 22°C ambient temperature. The R_{th2} value has been reduced by 0%.

Note:

The diagram indicates the recommended speed in relation to the available torque at the output shaft for a given ambient temperature of 22°C.

The diagram shows the motor in a completely insulated as well as thermally coupled condition (R_{th2} 50% reduced).

The nominal voltage (U_N) curve shows the operating point at nominal voltage in the insulated and thermally coupled condition. Any points of operation above the curve at nominal voltage will require a higher operating voltage. Any points below the nominal voltage curve will require less voltage.

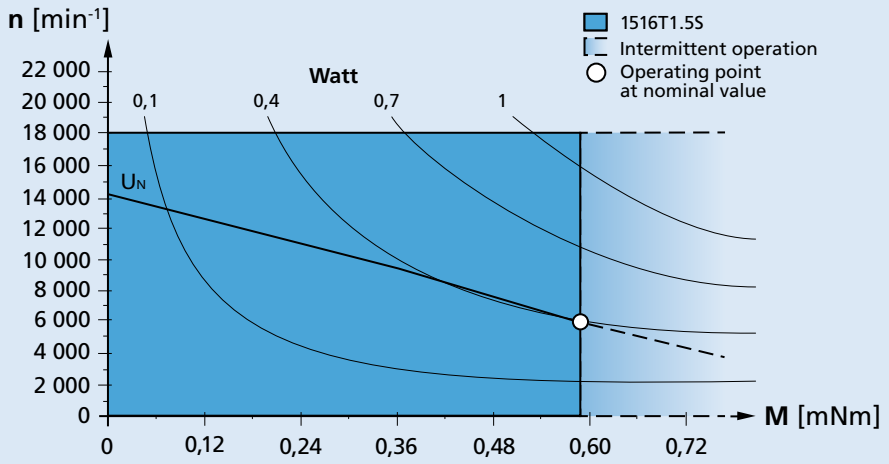

Recommended operation areas (example: nominal voltage 1.5V)

For notes on technical data and lifetime performance refer to "Technical Information".

Backwards

© DR. FRITZ FAULHABER GMBH & CO. KG
Specifications subject to change without notice.

Dimensional drawing

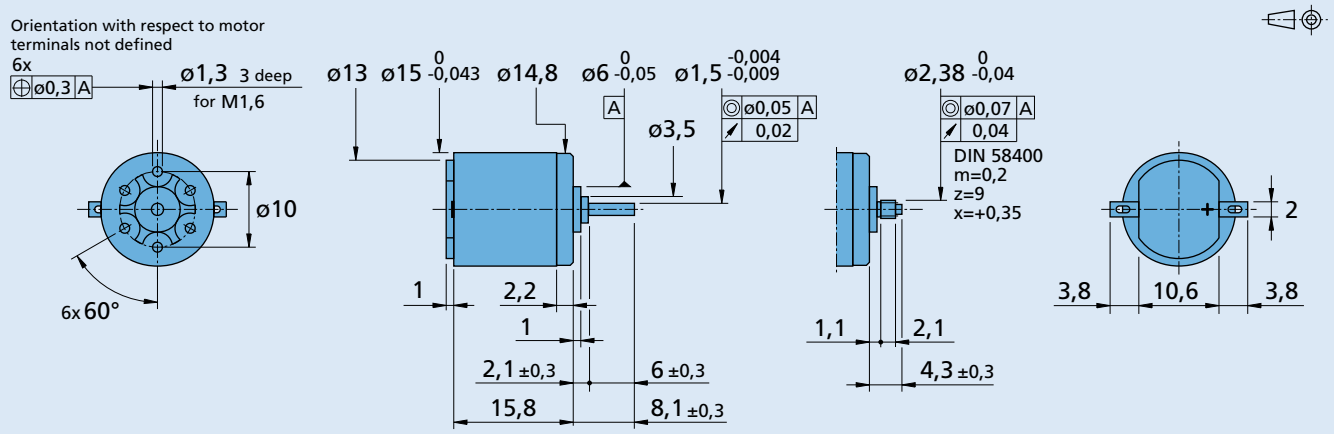

1516 T ... S **1516 E ... S**

Options

Example product designation: **1516T012S-277**

Option	Type	Description
L	Twin Leads	For motors with twin leads (PVC), length 150 mm, red (+) / black (-)
4924	Twin Leads	For motors with twin leads (PVC), length 300 mm, red (+) / black (-)
X4924	Twin Leads	For motors with twin leads (PVC), length 600 mm, red (+) / black (-)
4925	Twin Leads	For motors with twin leads (PVC), length 150 mm, red (+) / black (-), with connector AMP 179228-2
X4925	Twin Leads	For motors with twin leads (PVC), length 300 mm, red (+) / black (-), with connector AMP 179228-2
Y4925	Twin Leads	For motors with twin leads (PVC), length 600 mm, red (+) / black (-), with connector AMP 179228-2
277	Bearings	2 preloaded ball bearings

Product combination

Precision Gearheads / Lead Screws	Encoders	Drive Electronics	Cables / Accessories
15/5 15/5 S 16A		SC 1801 P SC 1801 S	To view our large range of accessory parts, please refer to the "Accessories" chapter.

© DR. FRITZ FAULHABER GMBH & CO. KG
Specifications subject to change without notice.

DC-Micromotors

Precious Metal Commutation

2 mNm

4,5 W

Series 1624 ... S

Values at 22°C and nominal voltage	1624 T	003 S	006 S	009 S	012 S	018 S	024 S	
1 Nominal voltage	U_N	3	6	9	12	18	24	V
2 Terminal resistance	R	1,6	9,1	14,5	24	42	75	Ω
3 Efficiency, max.	$\eta_{max.}$	78	71	75	75	77	76	%
4 No-load speed	n_0	12 000	10 500	11 500	13 000	13 800	14 400	min^{-1}
5 No-load current, typ. (with shaft ø 1,5 mm)	I_0	0,03	0,019	0,012	0,01	0,007	0,006	A
6 Stall torque	M_H	4,33	3,39	4,46	4,23	5,16	4,91	mNm
7 Friction torque	M_R	0,07	0,1	0,09	0,09	0,09	0,09	mNm
8 Speed constant	k_n	4 070	1 800	1 300	1 110	779	611	min^{-1}/V
9 Back-EMF constant	k_E	0,246	0,555	0,767	0,905	1,28	1,64	mV/min^{-1}
10 Torque constant	k_M	2,35	5,3	7,33	8,64	12,3	15,6	mNm/A
11 Current constant	k_I	0,426	0,189	0,136	0,116	0,082	0,064	A/mNm
12 Slope of n-M curve	$\Delta n/\Delta M$	2 770	3 100	2 580	3 070	2 670	2 930	min^{-1}/mNm
13 Rotor inductance	L	85	200	400	750	1 200	3 000	µH
14 Mechanical time constant	τ_m	19	22	19	19	19	24	ms
15 Rotor inertia	J	0,65	0,68	0,7	0,59	0,68	0,78	gcm^2
16 Angular acceleration	$\alpha_{max.}$	66	50	63	72	76	63	$\cdot 10^3 rad/s^2$
17 Thermal resistance	R_{th1} / R_{th2}	8 / 39						K/W
18 Thermal time constant	τ_{w1} / τ_{w2}	4 / 335						s
19 Operating temperature range:								
– motor		-30 ... +85 (optional version -30 ... +125)						°C
– winding, max. permissible		+125						°C
20 Shaft bearings		sintered bearings (standard)			ball bearings, preloaded (optional version)			
21 Shaft load max.:								
– with shaft diameter		1,5			1,5			mm
– radial at 3 000 min^{-1} (3 mm from bearing)		1,2			5			N
– axial at 3 000 min^{-1}		0,2			0,5			N
– axial at standstill		20			10			N
22 Shaft play:								
– radial	≤	0,03			0,015			mm
– axial	≤	0,2			0			mm
23 Housing material		steel, zinc galvanized and passivated						
24 Mass		21						g
25 Direction of rotation		clockwise, viewed from the front face						
26 Speed up to	$n_{max.}$	17 000						min^{-1}
27 Number of pole pairs		1						
28 Magnet material		AlNiCo						

Rated values for continuous operation								
29 Rated torque	M_N	1,6	1,8	2	1,8	2	1,9	mNm
30 Rated current (thermal limit)	I_N	0,7	0,37	0,29	0,22	0,17	0,13	A
31 Rated speed	n_N	6 860	3 050	4 680	5 620	6 890	7 240	min^{-1}

Note: Rated values are calculated with nominal voltage and at a 22°C ambient temperature. The R_{th2} value has been reduced by 0%.

Note:

The diagram indicates the recommended speed in relation to the available torque at the output shaft for a given ambient temperature of 22°C.

The diagram shows the motor in a completely insulated as well as thermally coupled condition (R_{th2} 50% reduced).

The nominal voltage (U_N) curve shows the operating point at nominal voltage in the insulated and thermally coupled condition. Any points of operation above the curve at nominal voltage will require a higher operating voltage. Any points below the nominal voltage curve will require less voltage.

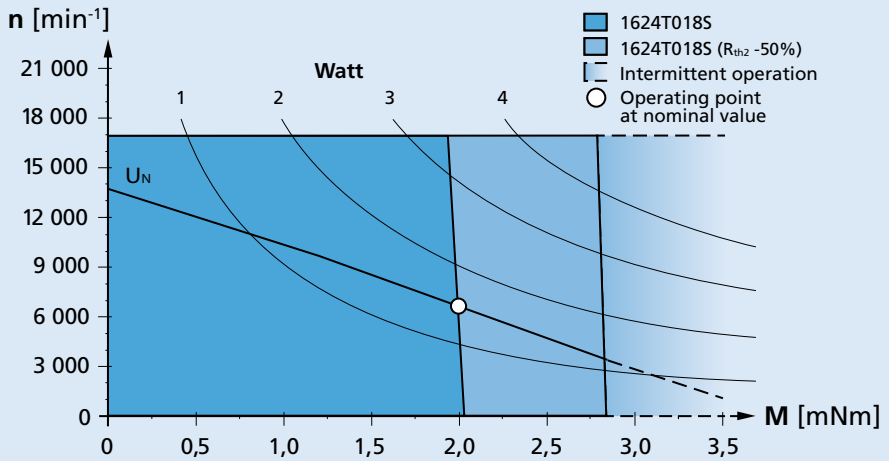

Recommended operation areas (example: nominal voltage 18V)

© DR. FRITZ FAULHABER GMBH & CO. KG
Specifications subject to change without notice.

Dimensional drawing

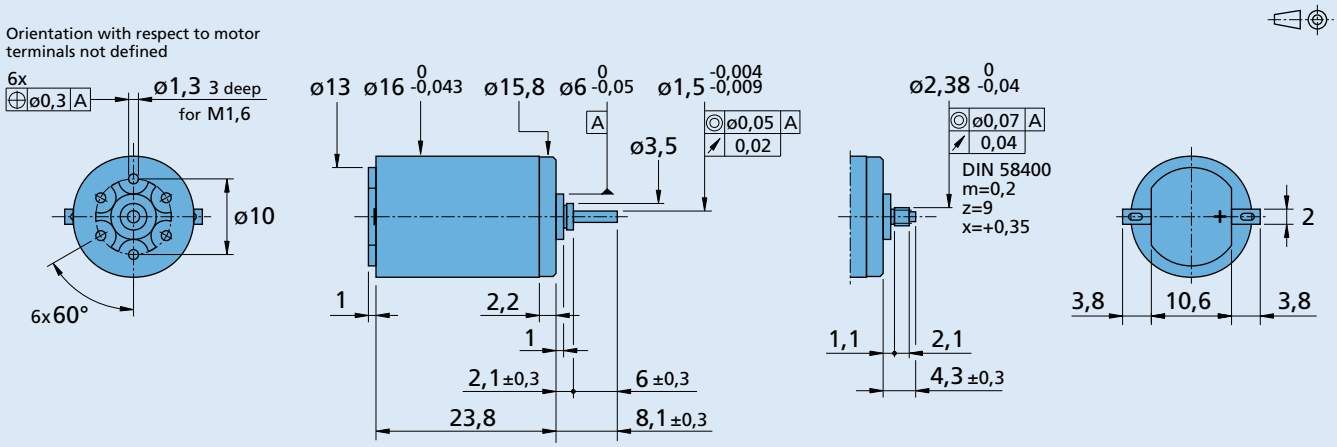

1624 T ... S **1624 E ... S**

Options

Example product designation: **1624T012S-277**

Option	Type	Description
L	Twin Leads	For motors with twin leads (PVC), length 150 mm, red (+) / black (-)
4924	Twin Leads	For motors with twin leads (PVC), length 300 mm, red (+) / black (-)
X4924	Twin Leads	For motors with twin leads (PVC), length 600 mm, red (+) / black (-)
4925	Twin Leads	For motors with twin leads (PVC), length 150 mm, red (+) / black (-), with connector AMP 179228-2
X4925	Twin Leads	For motors with twin leads (PVC), length 300 mm, red (+) / black (-), with connector AMP 179228-2
Y4925	Twin Leads	For motors with twin leads (PVC), length 600 mm, red (+) / black (-), with connector AMP 179228-2
F	Single Leads	For motors with single leads (PTFE), length 150 mm, red (+) / black (-)
277	Bearings	2 preloaded ball bearings

Product combination

Precision Gearheads / Lead Screws	Encoders	Drive Electronics	Cables / Accessories
15A 15/10 16A 16/5 16/5 S 16/7 16/8 17/1		SC 1801 P SC 1801 S	To view our large range of accessory parts, please refer to the "Accessories" chapter.

© DR. FRITZ FAULHABER GMBH & CO. KG
Specifications subject to change without notice.

DC-Micromotors

Precious Metal Commutation

4,7 mNm

7,5 W

Series 2230 ... S

Values at 22°C and nominal voltage	2230 T	003 S	006 S	012 S	015 S	024 S	040 S	
1 Nominal voltage	U_N	3	6	12	15	24	40	V
2 Terminal resistance	R	0,6	3	10,8	21	50	193	Ω
3 Efficiency, max.	$\eta_{max.}$	83	82	83	82	81	78	%
4 No-load speed	n_0	9 600	9 300	9 500	8 400	9 000	8 200	min^{-1}
5 No-load current, typ. (with shaft ø 1,5 mm)	I_0	0,04	0,019	0,01	0,007	0,005	0,003	A
6 Stall torque	M_H	14,7	12,1	13,2	11,9	12	9,37	mNm
7 Friction torque	M_R	0,12	0,12	0,12	0,12	0,13	0,14	mNm
8 Speed constant	k_n	3 230	1 560	799	566	379	208	min^{-1}/V
9 Back-EMF constant	k_E	0,31	0,639	1,25	1,77	2,64	4,81	mV/min^{-1}
10 Torque constant	k_M	2,96	6,1	12	16,9	25,2	45,9	mNm/A
11 Current constant	k_I	0,338	0,164	0,084	0,059	0,04	0,022	A/mNm
12 Slope of n-M curve	$\Delta n/\Delta M$	653	769	720	706	750	875	min^{-1}/mNm
13 Rotor inductance	L	35	150	420	900	2 200	8 000	µH
14 Mechanical time constant	τ_m	25	20	20	20	19	22	ms
15 Rotor inertia	J	3,7	2,5	2,7	2,7	2,4	2,4	gcm^2
16 Angular acceleration	$\alpha_{max.}$	40	49	50	44	50	39	$\cdot 10^3 rad/s^2$
17 Thermal resistance	R_{th1} / R_{th2}	4 / 28						K/W
18 Thermal time constant	τ_{w1} / τ_{w2}	4,5 / 602						s
19 Operating temperature range:								
– motor		-30 ... +85 (optional version -30 ... +125)						°C
– winding, max. permissible		+125						°C
20 Shaft bearings		sintered bearings			ball bearings, preloaded			
21 Shaft load max.:		(standard)			(optional version)			
– with shaft diameter		1,5			2			mm
– radial at 3 000 min^{-1} (3 mm from bearing)		1,2			8			N
– axial at 3 000 min^{-1}		0,2			0,8			N
– axial at standstill		20			10			N
22 Shaft play:								
– radial	≤	0,03			0,015			mm
– axial	≤	0,2			0			mm
23 Housing material		steel, zinc galvanized and passivated						
24 Mass		50						g
25 Direction of rotation		clockwise, viewed from the front face						
26 Speed up to	$n_{max.}$	11 000						min^{-1}
27 Number of pole pairs		1						
28 Magnet material		AlNiCo						
Rated values for continuous operation								
29 Rated torque	M_N	2	4,1	4,6	4,7	4,5	4,2	mNm
30 Rated current (thermal limit)	I_N	0,7	0,7	0,4	0,29	0,18	0,094	A
31 Rated speed	n_N	8 260	5 370	5 210	4 160	4 650	3 490	min^{-1}

Note: Rated values are calculated with nominal voltage and at a 22°C ambient temperature. The R_{th2} value has been reduced by 0%.

Note:

The diagram indicates the recommended speed in relation to the available torque at the output shaft for a given ambient temperature of 22°C.

The diagram shows the motor in a completely insulated as well as thermally coupled condition (R_{th2} 50% reduced).

The nominal voltage (U_N) curve shows the operating point at nominal voltage in the insulated and thermally coupled condition. Any points of operation above the curve at nominal voltage will require a higher operating voltage. Any points below the nominal voltage curve will require less voltage.

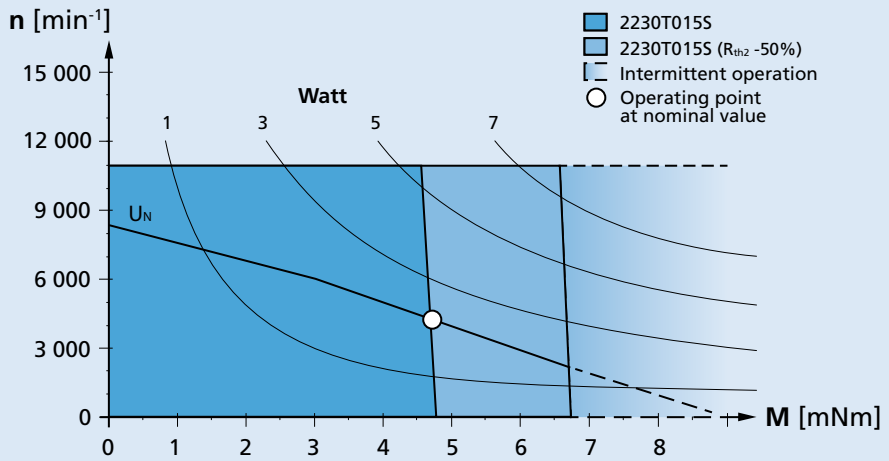

Recommended operation areas (example: nominal voltage 15V)

For notes on technical data and lifetime performance refer to "Technical Information".

© DR. FRITZ FAULHABER GMBH & CO. KG
Specifications subject to change without notice.

Dimensional drawing

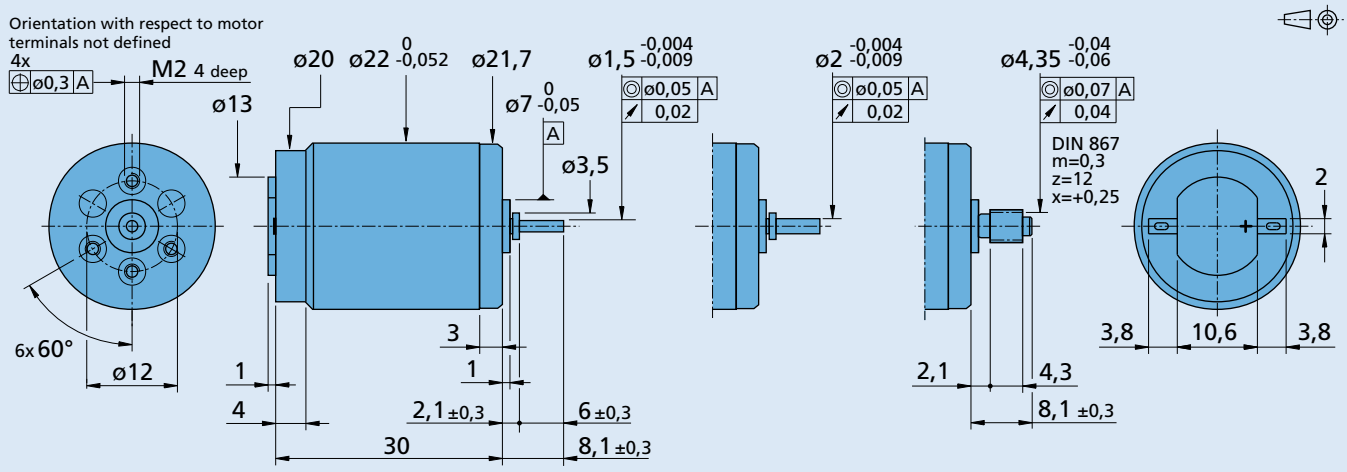

Options

Example product designation: **2230T012S-277**

Option	Type	Description
L	Twin Leads	For motors with twin leads (PVC), length 150 mm, red (+) / black (-)
4924	Twin Leads	For motors with twin leads (PVC), length 300 mm, red (+) / black (-)
X4924	Twin Leads	For motors with twin leads (PVC), length 600 mm, red (+) / black (-)
4925	Twin Leads	For motors with twin leads (PVC), length 150 mm, red (+) / black (-), with connector AMP 179228-2
X4925	Twin Leads	For motors with twin leads (PVC), length 300 mm, red (+) / black (-), with connector AMP 179228-2
Y4925	Twin Leads	For motors with twin leads (PVC), length 600 mm, red (+) / black (-), with connector AMP 179228-2
F	Single Leads	For motors with single leads (PTFE), length 150 mm, red (+) / black (-)
277	Bearings	2 preloaded ball bearings

Product combination

Precision Gearheads / Lead Screws	Encoders	Drive Electronics	Cables / Accessories
22E 22EKV 22/2 22/5 22/7 23/1		SC 1801 P SC 1801 S SC 2402 P SC 2804 S	To view our large range of accessory parts, please refer to the "Accessories" chapter.

© DR. FRITZ FAULHABER GMBH & CO. KG
Specifications subject to change without notice.

DC-Micromotors 5,9 mNm

Precious Metal Commutation 8 W

Series 2233 ... S

Values at 22°C and nominal voltage	2233 T	4,5 S	006 S	012 S	018 S	024 S	030 S	
1 Nominal voltage	U_N	4,5	6	12	18	24	30	V
2 Terminal resistance	R	1,2	2,7	9,6	25	52	97	Ω
3 Efficiency, max.	$\eta_{max.}$	86	85	85	83	83	81	%
4 No-load speed	n_0	8 500	7 700	8 200	9 000	8 400	8 700	min^{-1}
5 No-load current, typ. (with shaft ø 1,5 mm)	I_0	0,02	0,014	0,007	0,005	0,004	0,003	A
6 Stall torque	M_H	20,2	16	17,3	13,4	12,4	9,9	mNm
7 Friction torque	M_R	0,1	0,1	0,1	0,1	0,1	0,1	mNm
8 Speed constant	k_n	1 895	1 296	684	508	354	293	min^{-1}/V
9 Back-EMF constant	k_E	0,528	0,772	1,46	1,97	2,82	3,41	mV/min^{-1}
10 Torque constant	k_M	5,04	7,37	14	18,8	27	32,6	mNm/A
11 Current constant	k_I	0,198	0,136	0,072	0,053	0,037	0,031	A/mNm
12 Slope of n-M curve	$\Delta n/\Delta M$	421	483	472	676	678	877	min^{-1}/mNm
13 Rotor inductance	L	60	120	440	800	1 600	2 400	µH
14 Mechanical time constant	τ_m	11,5	10	11	17	11	12,9	ms
15 Rotor inertia	J	2,6	2	2,2	2,5	1,6	1,4	gcm^2
16 Angular acceleration	$\alpha_{max.}$	77	80	78	54	78	71	$\cdot 10^3 rad/s^2$
17 Thermal resistance	R_{th1} / R_{th2}	4 / 27						K/W
18 Thermal time constant	τ_{w1} / τ_{w2}	4 / 660						s
19 Operating temperature range:								
– motor		-30 ... +85 (optional version -30 ... +125)						°C
– winding, max. permissible		+125						°C
20 Shaft bearings		sintered bearings			ball bearings, preloaded			
21 Shaft load max.:		(standard)			(optional version)			
– with shaft diameter		1,5			2			mm
– radial at 3 000 min^{-1} (3 mm from bearing)		1,2			8			N
– axial at 3 000 min^{-1}		0,2			0,8			N
– axial at standstill		20			10			N
22 Shaft play:								
– radial	≤	0,03			0,015			mm
– axial	≤	0,2			0			mm
23 Housing material		steel, zinc galvanized and passivated						
24 Mass		61						g
25 Direction of rotation		clockwise, viewed from the front face						
26 Speed up to	$n_{max.}$	10 000						min^{-1}
27 Number of pole pairs		1						
28 Magnet material		AlNiCo						

Rated values for continuous operation								
29 Rated torque	M_N	3,4	5	5,9	4,9	4,9	4,3	mNm
30 Rated current (thermal limit)	I_N	0,7	0,7	0,43	0,27	0,19	0,14	A
31 Rated speed	n_N	6 930	4 800	4 600	4 830	4 170	3 860	min^{-1}

Note: Rated values are calculated with nominal voltage and at a 22°C ambient temperature. The R_{th2} value has been reduced by 0%.

Note:

The diagram indicates the recommended speed in relation to the available torque at the output shaft for a given ambient temperature of 22°C.

The diagram shows the motor in a completely insulated as well as thermally coupled condition (R_{th2} 50% reduced).

The nominal voltage (U_N) curve shows the operating point at nominal voltage in the insulated and thermally coupled condition. Any points of operation above the curve at nominal voltage will require a higher operating voltage. Any points below the nominal voltage curve will require less voltage.

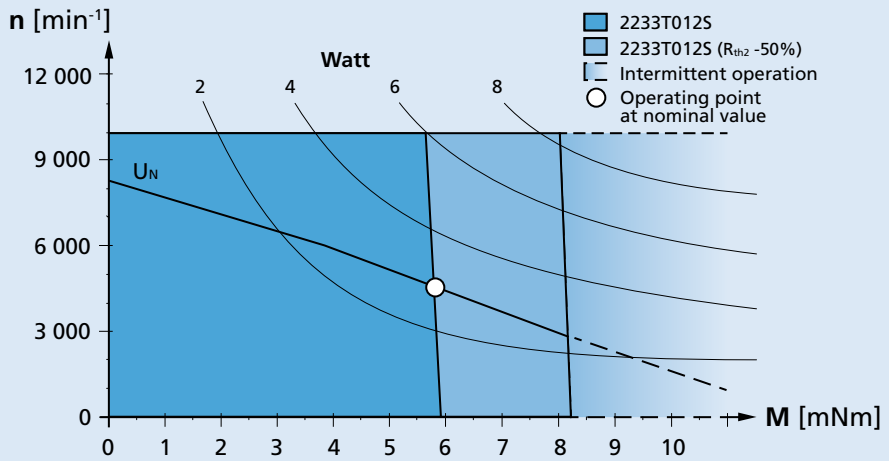

Recommended operation areas (example: nominal voltage 12V)

© DR. FRITZ FAULHABER GMBH & CO. KG
Specifications subject to change without notice.

Dimensional drawing

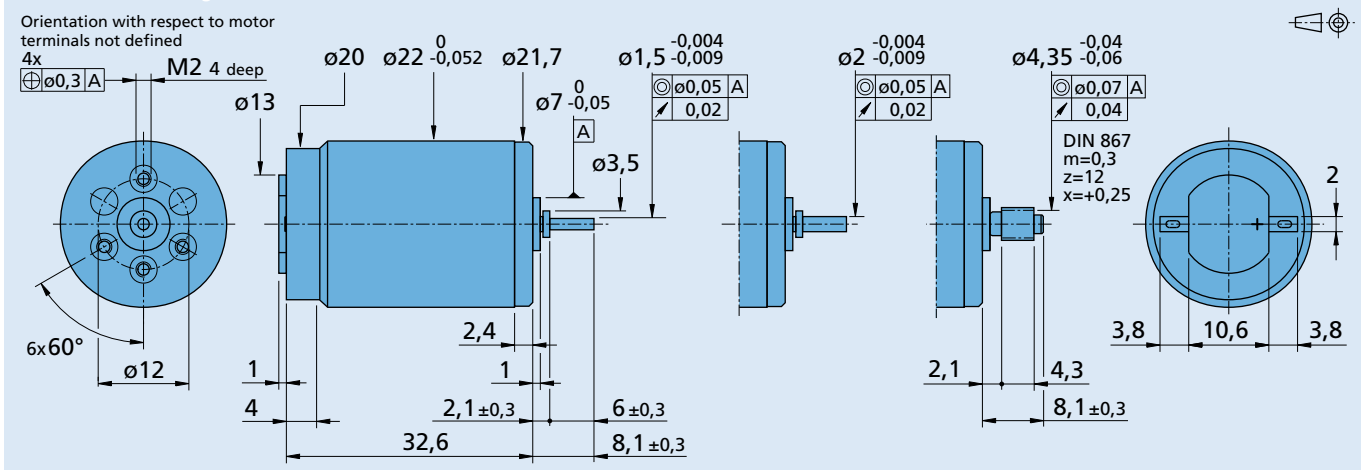

Options

Example product designation: **2233T012S-277**

Option	Type	Description
L	Twin Leads	For motors with twin leads (PVC), length 150 mm, red (+) / black (-)
4924	Twin Leads	For motors with twin leads (PVC), length 300 mm, red (+) / black (-)
X4924	Twin Leads	For motors with twin leads (PVC), length 600 mm, red (+) / black (-)
4925	Twin Leads	For motors with twin leads (PVC), length 150 mm, red (+) / black (-), with connector AMP 179228-2
X4925	Twin Leads	For motors with twin leads (PVC), length 300 mm, red (+) / black (-), with connector AMP 179228-2
Y4925	Twin Leads	For motors with twin leads (PVC), length 600 mm, red (+) / black (-), with connector AMP 179228-2
F	Single Leads	For motors with single leads (PTFE), length 150 mm, red (+) / black (-)
277	Bearings	2 preloaded ball bearings

Product combination

Precision Gearheads / Lead Screws	Encoders	Drive Electronics	Cables / Accessories
22E 22EKV 22/2 22/5 22/7 23/1		SC 1801 P SC 1801 S SC 2402 P SC 2804 S	To view our large range of accessory parts, please refer to the "Accessories" chapter.

© DR. FRITZ FAULHABER GMBH & CO. KG
Specifications subject to change without notice.

Backwards

FAULHABER SR

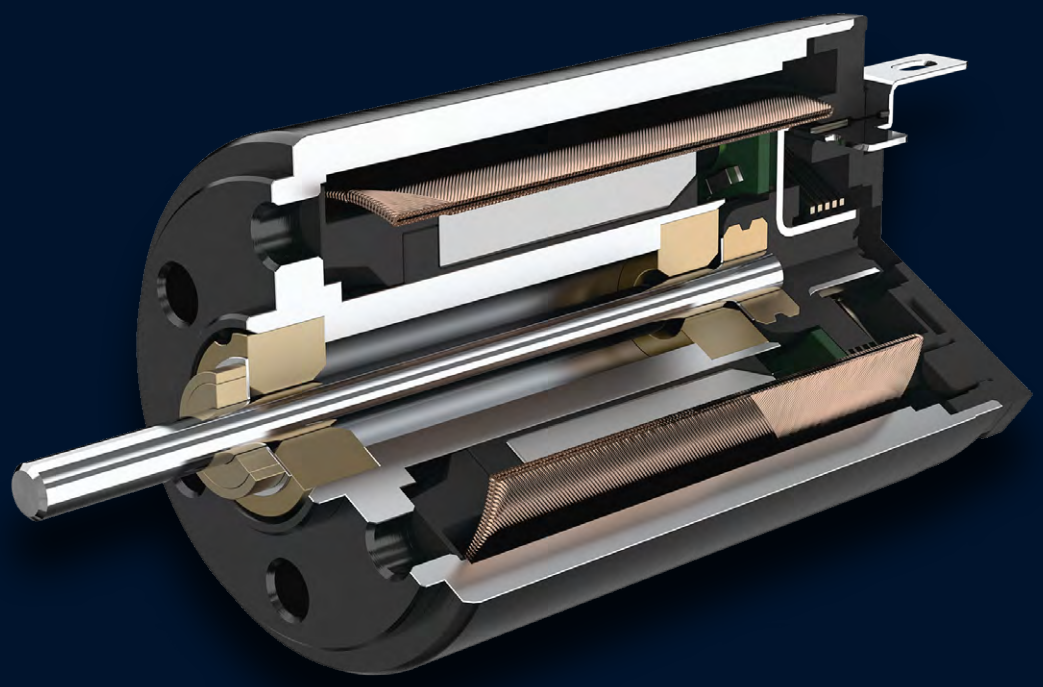

FAULHABER SR

0816...SR	Precious Metal Commutation	0.7 mNm
1016...SR	Precious Metal Commutation	0.92 mNm
1024...SR	Precious Metal Commutation	1.6 mNm
1224...SR	Precious Metal Commutation	1.7 mNm
1319...SR	Precious Metal Commutation	1.32 mNm
1331...SR	Precious Metal Commutation	3.44 mNm
1516...SR	Precious Metal Commutation	0.918 mNm
1524...SR	Precious Metal Commutation	2.9 mNm
1717...SR	Precious Metal Commutation	2.2 mNm
1724...SR	Precious Metal Commutation	4.5 mNm
2224...SR	Precious Metal Commutation	6.8 mNm
2232...SR	Precious Metal Commutation	10 mNm

Backwards

DC-Micromotors

Precious Metal Commutation

0,7 mNm

1,2 W

Series 0816 ... SR

Values at 22°C and nominal voltage		0816 K	003 SR	006 SR	009 SR	012 SR	
1 Nominal voltage	U_N		3	6	9	12	V
2 Terminal resistance	R		5,4	21,2	47	101,8	Ω
3 Efficiency, max.	$\eta_{max.}$		69	69	69	67	%
4 No-load speed	n_0		13 250	13 500	13 500	12 600	min^{-1}
5 No-load current, typ. (with shaft ø 1 mm)	I_0		0,016	0,0083	0,0057	0,0039	A
6 Stall torque	M_H		1,15	1,13	1,15	1	mNm
7 Friction torque	M_R		0,034	0,034	0,035	0,034	mNm
8 Speed constant	k_n		4 526	2 318	1 543	1 085	min^{-1}/V
9 Back-EMF constant	k_E		0,221	0,431	0,648	0,922	mV/min^{-1}
10 Torque constant	k_M		2,11	4,12	6,19	8,8	mNm/A
11 Current constant	k_I		0,474	0,243	0,162	0,114	A/mNm
12 Slope of n-M curve	$\Delta n/\Delta M$		11 475	11 904	11 714	12 553	min^{-1}/mNm
13 Rotor inductance	L		53	217	507	1 033	µH
14 Mechanical time constant	τ_m		6,1	6,5	6,2	6,5	ms
15 Rotor inertia	J		0,051	0,052	0,051	0,049	gcm^2
16 Angular acceleration	$\alpha_{max.}$		229	219	227	203	$\cdot 10^3 rad/s^2$
17 Thermal resistance	R_{th1} / R_{th2}	20 / 48					K/W
18 Thermal time constant	τ_{w1} / τ_{w2}	4,2 / 242					s
19 Operating temperature range:							
– motor		-30 ... +85 (optional version -30 ... +125)					°C
– winding, max. permissible		+85 (optional version +125)					°C
20 Shaft bearings		sintered bearings					
21 Shaft load max.:							
– with shaft diameter		1					mm
– radial at 3 000 min^{-1} (1,5 mm from bearing)		0,7					N
– axial at 3 000 min^{-1}		0,1					N
– axial at standstill		20					N
22 Shaft play:							
– radial	≤	0,02					mm
– axial	≤	0,2					mm
23 Housing material		steel, nickel plated					
24 Mass		4,5					g
25 Direction of rotation		clockwise, viewed from the front face					
26 Speed up to	$n_{max.}$	16 000					min^{-1}
27 Number of pole pairs		1					
28 Magnet material		NdFeB					

Rated values for continuous operation							
29 Rated torque	M_N		0,7	0,69	0,69	0,61	mNm
30 Rated current (thermal limit)	I_N		0,37	0,19	0,13	0,077	A
31 Rated speed	n_N		2 540	2 660	2 790	2 500	min^{-1}

Note: Rated values are calculated with nominal voltage and at a 22°C ambient temperature. The R_{th2} value has been reduced by 0%.

Note:

The diagram indicates the recommended speed in relation to the available torque at the output shaft for a given ambient temperature of 22°C.

The diagram shows the motor in a completely insulated as well as thermally coupled condition (R_{th2} 50% reduced).

The nominal voltage (U_N) curve shows the operating point at nominal voltage in the insulated and thermally coupled condition. Any points of operation above the curve at nominal voltage will require a higher operating voltage. Any points below the nominal voltage curve will require less voltage.

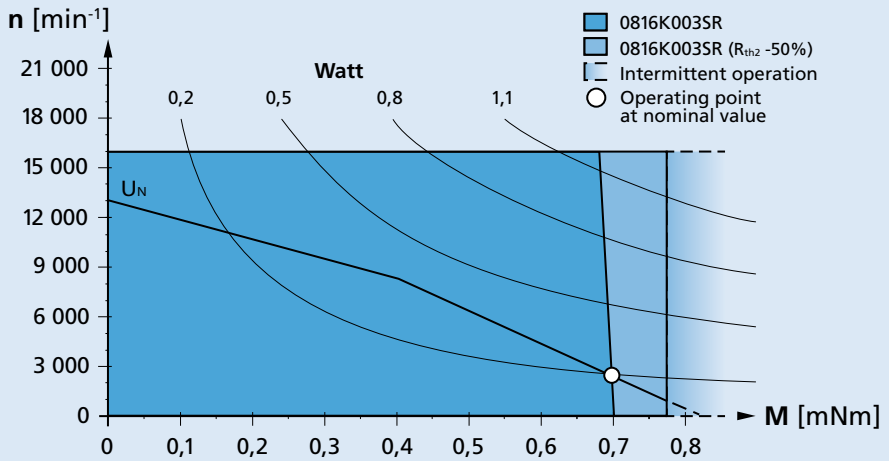

Recommended operation areas (example: nominal voltage 3V)

© DR. FRITZ FAULHABER GMBH & CO. KG
Specifications subject to change without notice.

Dimensional drawing

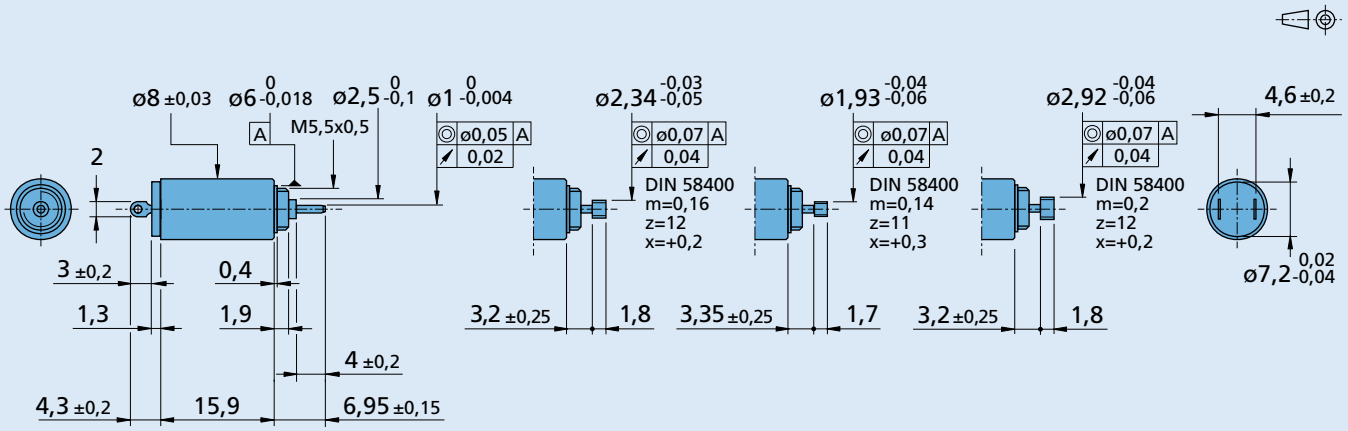

0816 K ... SR

0816 P ... SR
for Gearhead 08/1

0816 D ... SR
for Gearheads 08/2, 08/3

0816 M ... SR
for Gearhead 10/1

Options

Example product designation: **0816K012SR-K2565**

Option	Type	Description
K4180	Encoder combination	Motor with rear end shaft for combination with Encoder IEP3-4096, motor with single leads PVC, length 150 mm
K2565	Encoder combination	Motor with rear end shaft for combination with Encoder PA2-50
K2567	Bearing	Front ball bearing
K2568	Temperature range	Extended temperature range (-30...+125°C)
K2570	Bearing lubrication	For vacuum of 10^{-5} Pa @ 22°C
K2571	Second shaft end	Ø 1 mm x 4,5 mm

Product combination

Precision Gearheads / Lead Screws	Encoders	Drive Electronics	Cables / Accessories
08/1 08/2 08/3 10/1 08L ... SL 08L ... HL 10L ... SL	PA2-50 IEP3-4096	SC 1801 P SC 1801 S MC 3001 B MC 3001 P	To view our large range of accessory parts, please refer to the "Accessories" chapter.

© DR. FRITZ FAULHABER GMBH & CO. KG
Specifications subject to change without notice.

DC-Micromotors

Precious Metal Commutation

0,92 mNm

2 W

Series 1016 ... SR

Values at 22°C and nominal voltage		1016 K	003 SR	006 SR	009 SR	012 SR	
1 Nominal voltage	U_N		3	6	9	12	V
2 Terminal resistance	R		3,1	12,5	27,1	40,7	Ω
3 Efficiency, max.	$\eta_{max.}$		76	74	74	75	%
4 No-load speed	n_0		12 700	12 800	13 000	14 100	min^{-1}
5 No-load current, typ. (with shaft ø 1 mm)	I_0		0,017	0,009	0,007	0,005	A
6 Stall torque	M_H		2,12	2,08	2,11	2,32	mNm
7 Friction torque	M_R		0,037	0,04	0,043	0,042	mNm
8 Speed constant	k_n		4 282	2 175	1 475	1 195	min^{-1}/V
9 Back-EMF constant	k_E		0,234	0,46	0,678	0,837	mV/min^{-1}
10 Torque constant	k_M		2,23	4,39	6,48	7,99	mNm/A
11 Current constant	k_I		0,448	0,228	0,154	0,125	A/mNm
12 Slope of n-M curve	$\Delta n/\Delta M$		5 953	6 166	6 177	6 085	min^{-1}/mNm
13 Rotor inductance	L		42	168	363	547	µH
14 Mechanical time constant	τ_m		8	8	8	8	ms
15 Rotor inertia	J		0,12	0,12	0,12	0,12	gcm^2
16 Angular acceleration	$\alpha_{max.}$		175	171	172	189	$\cdot 10^3 rad/s^2$
17 Thermal resistance	R_{th1} / R_{th2}	17 / 59					K/W
18 Thermal time constant	τ_{w1} / τ_{w2}	5,7 / 176					s
19 Operating temperature range:							
– motor		-30 ... +85 (optional version -30 ... +125)					°C
– winding, max. permissible		+85 (optional version +125)					°C
20 Shaft bearings		sintered bearings					
21 Shaft load max.:							
– with shaft diameter		1					mm
– radial at 3 000 min^{-1} (1,5 mm from bearing)		0,9					N
– axial at 3 000 min^{-1}		0,1					N
– axial at standstill		20					N
22 Shaft play:							
– radial	≤	0,02					mm
– axial	≤	0,15					mm
23 Housing material		steel, nickel plated					
24 Mass		6,5					g
25 Direction of rotation		clockwise, viewed from the front face					
26 Speed up to	$n_{max.}$	16 000					min^{-1}
27 Number of pole pairs		1					
28 Magnet material		NdFeB					

Rated values for continuous operation							
29 Rated torque	M_N		0,92	0,9	0,9	0,91	mNm
30 Rated current (thermal limit)	I_N		0,46	0,23	0,16	0,13	A
31 Rated speed	n_N		5 550	5 620	5 850	7 070	min^{-1}

Note: Rated values are calculated with nominal voltage and at a 22°C ambient temperature. The R_{th2} value has been reduced by 0%.

Note:

The diagram indicates the recommended speed in relation to the available torque at the output shaft for a given ambient temperature of 22°C.

The diagram shows the motor in a completely insulated as well as thermally coupled condition (R_{th2} 50% reduced).

The nominal voltage (U_N) curve shows the operating point at nominal voltage in the insulated and thermally coupled condition. Any points of operation above the curve at nominal voltage will require a higher operating voltage. Any points below the nominal voltage curve will require less voltage.

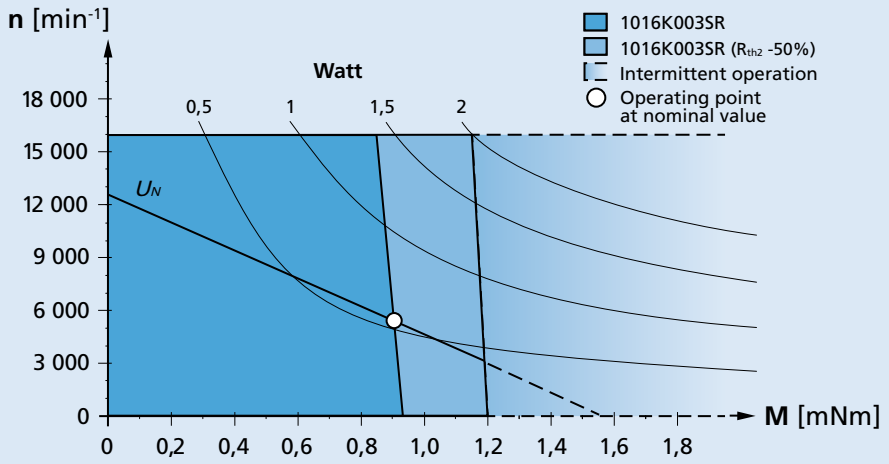

Recommended operation areas (example: nominal voltage 3V)

© DR. FRITZ FAULHABER GMBH & CO. KG
Specifications subject to change without notice.

Dimensional drawing

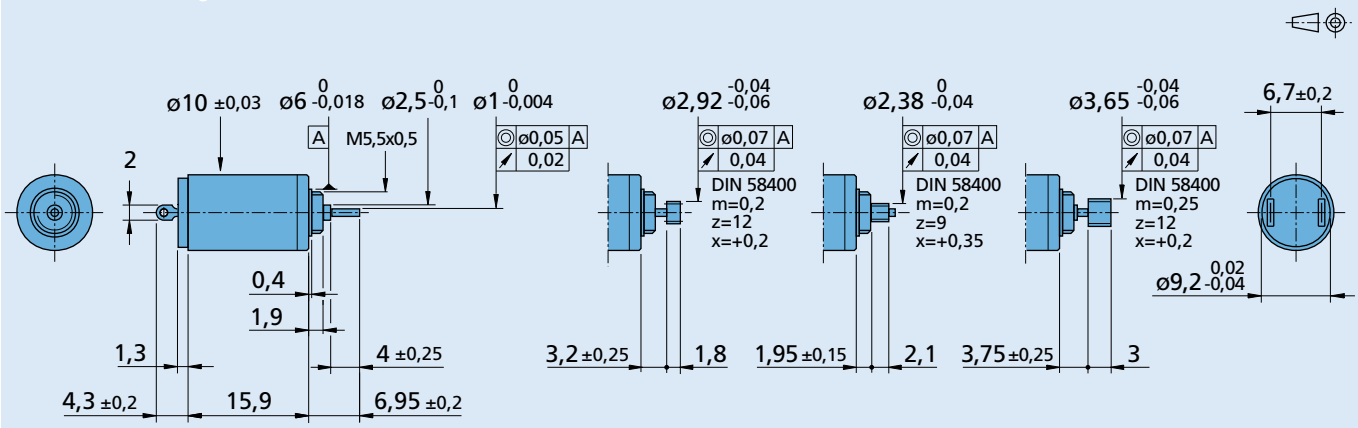

1016 K ... SR

1016 M ... SR
for Gearhead 10/1

1016 E ... SR
for Gearheads 12/3, 12/5

1016 A ... SR
for Gearhead 12/4

Options

Example product designation: **1016K006SR K2565**

Option	Type	Description
K4180	Encoder combination	Motor with rear end shaft for combination with Encoder IEP3-4096, motor with single leads PVC, length 150 mm
K2565	Encoder combination	Motor with rear end shaft for combination with Encoder PA2-100
K2567	Bearing	Front ball bearing
K2568	Temperature range	Extended temperature range (-30…+125°C)
K2570	Bearing lubrication	For vacuum of 10^{-5} Pa @ 22°C
K2571	Second shaft end	Ø 1 mm x 4,5 mm

Product combination

Precision Gearheads / Lead Screws	Encoders	Drive Electronics	Cables / Accessories
10/1 12/3 12/4 12/5 10L ... SL	PA2-100 IEP3-4096	SC 1801 P SC 1801 S MC 3001 B MC 3001 P	To view our large range of accessory parts, please refer to the "Accessories" chapter.

© DR. FRITZ FAULHABER GMBH & CO. KG
Specifications subject to change without notice.

DC-Micromotors 1,6 mNm

Precious Metal Commutation 3,1 W

Series 1024 ... SR

Values at 22°C and nominal voltage		1024 K	003 SR	006 SR	009 SR	012 SR	
1 Nominal voltage	U_N		3	6	9	12	V
2 Terminal resistance	R		1,36	5,96	14,9	23,7	Ω
3 Efficiency, max.	$\eta_{max.}$		84	83	82	82	%
4 No-load speed	n_0		12 200	12 300	12 000	12 800	min^{-1}
5 No-load current, typ. (with shaft ø 1 mm)	I_0		0,016	0,008	0,005	0,004	A
6 Stall torque	M_H		5,1	4,6	4,28	4,45	mNm
7 Friction torque	M_R		0,037	0,037	0,037	0,038	mNm
8 Speed constant	k_n		4 098	2 071	1 337	1 078	min^{-1}/V
9 Back-EMF constant	k_E		0,244	0,483	0,748	0,928	mV/min^{-1}
10 Torque constant	k_M		2,33	4,61	7,14	8,86	mNm/A
11 Current constant	k_I		0,429	0,217	0,14	0,113	A/mNm
12 Slope of n-M curve	$\Delta n/\Delta M$		2 392	2 678	2 791	2 883	min^{-1}/mNm
13 Rotor inductance	L		16	62	151	218	µH
14 Mechanical time constant	τ_m		3	3,4	3,5	3,3	ms
15 Rotor inertia	J		0,12	0,12	0,12	0,11	gcm^2
16 Angular acceleration	$\alpha_{max.}$		425	384	356	404	$\cdot 10^3 rad/s^2$
17 Thermal resistance	R_{th1} / R_{th2}	16 / 51					K/W
18 Thermal time constant	τ_{w1} / τ_{w2}	6,1 / 251					s
19 Operating temperature range:							
– motor		-30 ... +85 (optional version -30 ... +125)					°C
– winding, max. permissible		+85 (optional version +125)					°C
20 Shaft bearings		sintered bearings					
21 Shaft load max.:							
– with shaft diameter		1					mm
– radial at 3 000 min^{-1} (1,5 mm from bearing)		1					N
– axial at 3 000 min^{-1}		0,1					N
– axial at standstill		20					N
22 Shaft play:							
– radial	≤	0,02					mm
– axial	≤	0,15					mm
23 Housing material		steel, nickel plated					
24 Mass		10,8					g
25 Direction of rotation		clockwise, viewed from the front face					
26 Speed up to	$n_{max.}$	15 000					min^{-1}
27 Number of pole pairs		1					
28 Magnet material		NdFeB					
Rated values for continuous operation							
29 Rated torque	M_N		1,6	1,5	1,5	1,4	mNm
30 Rated current (thermal limit)	I_N		0,74	0,35	0,22	0,18	A
31 Rated speed	n_N		7 640	7 460	6 910	7 780	min^{-1}

Note: Rated values are calculated with nominal voltage and at a 22°C ambient temperature. The R_{th2} value has been reduced by 0%.

Note:

The diagram indicates the recommended speed in relation to the available torque at the output shaft for a given ambient temperature of 22°C.

The diagram shows the motor in a completely insulated as well as thermally coupled condition (R_{th2} 50% reduced).

The nominal voltage (U_N) curve shows the operating point at nominal voltage in the insulated and thermally coupled condition. Any points of operation above the curve at nominal voltage will require a higher operating voltage. Any points below the nominal voltage curve will require less voltage.

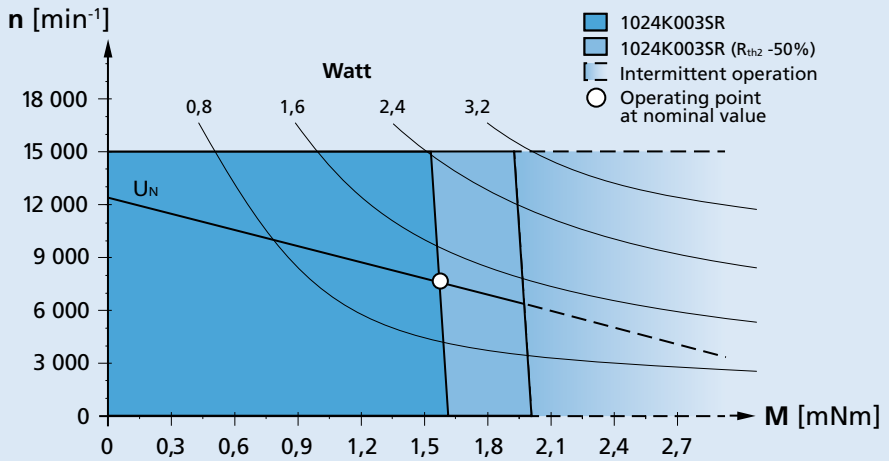

Recommended operation areas (example: nominal voltage 3V)

© DR. FRITZ FAULHABER GMBH & CO. KG
Specifications subject to change without notice.

Dimensional drawing

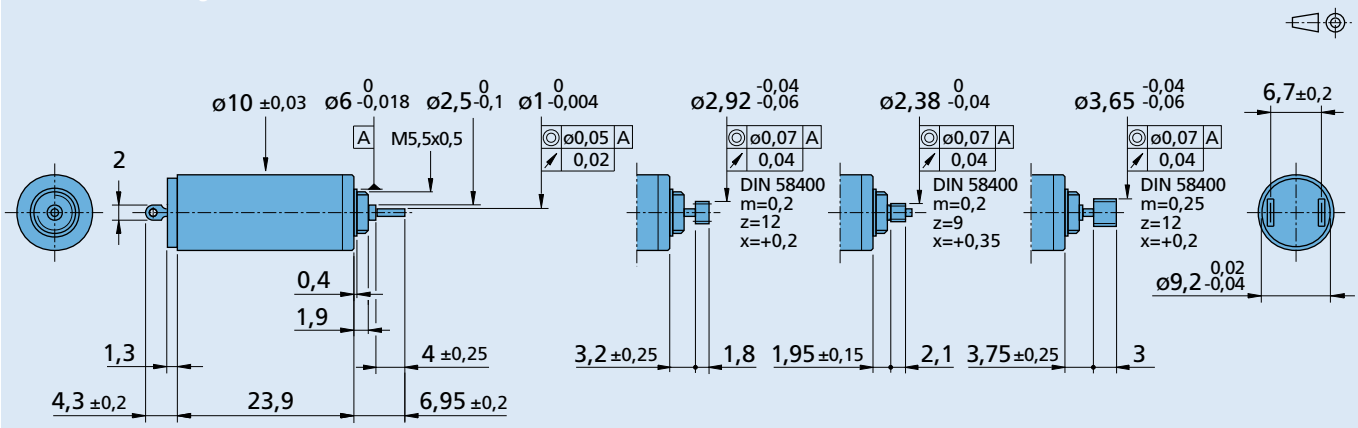

1024 K ... SR

1024 M ... SR
for Gearhead 10/1

1024 E ... SR
for Gearheads 12/3, 12/5

1024 A ... SR
for Gearhead 12/4

Options

Example product designation: **1024K006SR K2565**

Option	Type	Description
K4180	Encoder combination	Motor with rear end shaft for combination with Encoder IEP3-4096, motor with single leads PVC, length 150 mm
K2565	Encoder combination	Motor with rear end shaft for combination with Encoder PA2-100
K2567	Bearing	Front ball bearing
K2568	Temperature range	Extended temperature range (-30...+125°C)
K2570	Bearing lubrication	For vacuum of 10^{-5} Pa @ 22°C
K2571	Second shaft end	Ø 1 mm x 4,5 mm

Product combination

Precision Gearheads / Lead Screws	Encoders	Drive Electronics	Cables / Accessories
10/1 12/3 12/4 12/5 10L ... SL	PA2-100 IEP3-4096	SC 1801 P SC 1801 S MC 3001 B MC 3001 P	To view our large range of accessory parts, please refer to the "Accessories" chapter.

© DR. FRITZ FAULHABER GMBH & CO. KG
Specifications subject to change without notice.

DC-Micromotors 1,7 mNm

Precious Metal Commutation 3,4 W

Series 1224 ... SR

Values at 22°C and nominal voltage		1224 N	006 SR	012 SR	015 SR	
1 Nominal voltage	U_N		6	12	15	V
2 Terminal resistance	R		4,6	18,2	29,4	Ω
3 Efficiency, max.	$\eta_{max.}$		82	83	83	%
4 No-load speed	n_0		13 800	13 700	13 400	min^{-1}
5 No-load current, typ. (with shaft ø 1 mm)	I_0		0,011	0,005	0,004	A
6 Stall torque	M_H		5,31	5,43	5,36	mNm
7 Friction torque	M_R		0,05	0,05	0,05	mNm
8 Speed constant	k_n		2 323	1 151	901	min^{-1}/V
9 Back-EMF constant	k_E		0,43	0,869	1,11	mV/min^{-1}
10 Torque constant	k_M		4,11	8,3	10,6	mNm/A
11 Current constant	k_I		0,243	0,12	0,094	A/mNm
12 Slope of n-M curve	$\Delta n/\Delta M$		2 600	2 523	2 499	min^{-1}/mNm
13 Rotor inductance	L		55	220	350	µH
14 Mechanical time constant	τ_m		5	5	5	ms
15 Rotor inertia	J		0,18	0,18	0,18	gcm^2
16 Angular acceleration	$\alpha_{max.}$		295	302	298	$\cdot 10^3 rad/s^2$
17 Thermal resistance	R_{th1} / R_{th2}	17 / 37				K/W
18 Thermal time constant	τ_{w1} / τ_{w2}	6,5 / 371				s
19 Operating temperature range:						
– motor		-30 ... +85 (optional version -30 ... +125)				°C
– winding, max. permissible		+85 (optional version +125)				°C
20 Shaft bearings		sintered bearings				
21 Shaft load max.:						
– with shaft diameter		1				mm
– radial at 3 000 min^{-1} (1,5 mm from bearing)		0,5				N
– axial at 3 000 min^{-1}		0,1				N
– axial at standstill		20				N
22 Shaft play:						
– radial	≤	0,03				mm
– axial	≤	0,2				mm
23 Housing material		steel, black coated				
24 Mass		13,5				g
25 Direction of rotation		clockwise, viewed from the front face				
26 Speed up to	$n_{max.}$	16 000				min^{-1}
27 Number of pole pairs		1				
28 Magnet material		NdFeB				

Rated values for continuous operation						
29 Rated torque	M_N		1,5	1,7	1,7	mNm
30 Rated current (thermal limit)	I_N		0,4	0,22	0,18	A
31 Rated speed	n_N		9 680	8 580	8 270	min^{-1}

Note: Rated values are calculated with nominal voltage and at a 22°C ambient temperature. The R_{th2} value has been reduced by 0%.

Note:

The diagram indicates the recommended speed in relation to the available torque at the output shaft for a given ambient temperature of 22°C.

The diagram shows the motor in a completely insulated as well as thermally coupled condition (R_{th2} 50% reduced).

The nominal voltage (U_N) curve shows the operating point at nominal voltage in the insulated and thermally coupled condition. Any points of operation above the curve at nominal voltage will require a higher operating voltage. Any points below the nominal voltage curve will require less voltage.

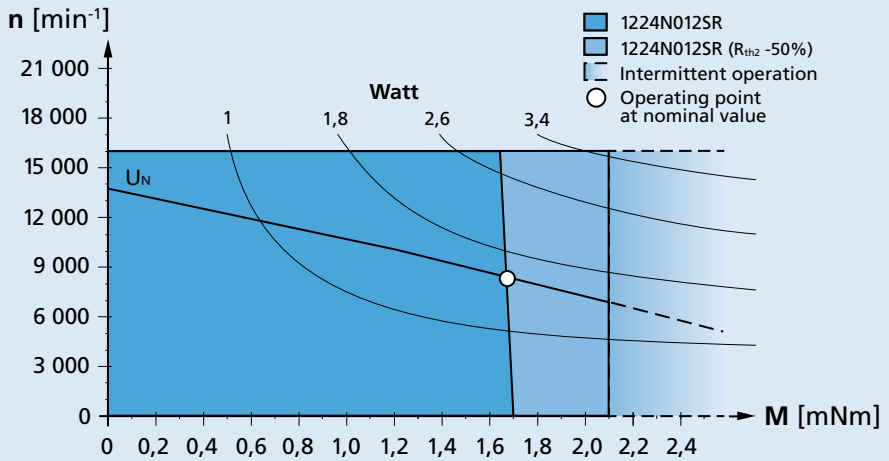

Recommended operation areas (example: nominal voltage 12V)

For notes on technical data and lifetime performance refer to "Technical Information".

Backwards

© DR. FRITZ FAULHABER GMBH & CO. KG
Specifications subject to change without notice.

Dimensional drawing

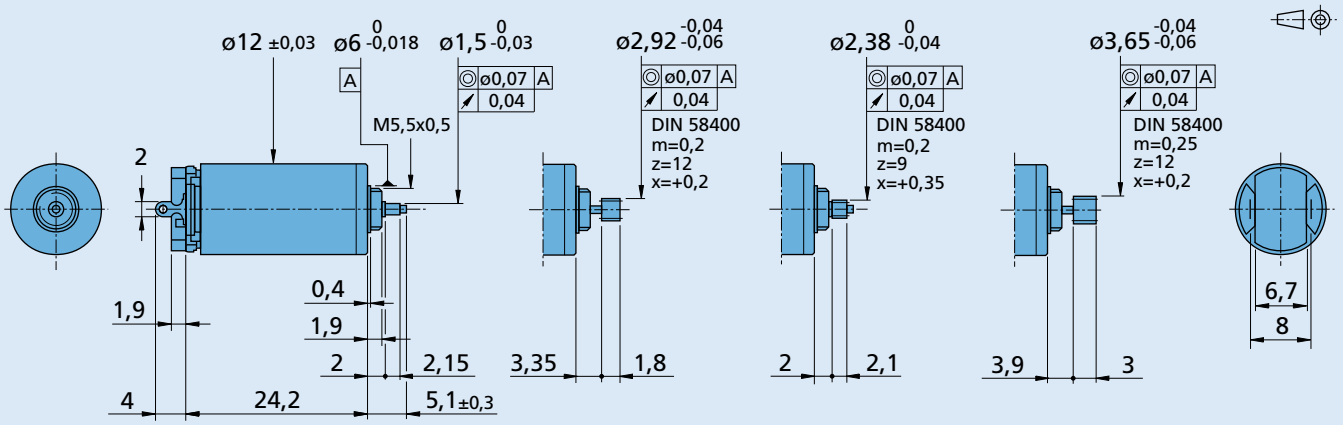

1224 N ... SR

1224 M ... SR
for Gearhead 10/1

1224 E ... SR
for Gearheads 12/3, 12/5

1224 A ... SR
for Gearhead 12/4

Options

Example product designation: **1224N012SR-K179**

Option	Type	Description
K179	Bearing lubrication	For vacuum of 10^{-5} Pa @ 22°C
K4066	Temperature range	Extended temperature range (-30…+125°C)
K380	Second shaft end	Ø 1 mm x 2,5 mm
K1752	Encoder combination	Motor with rear end shaft for combination with Encoder PA2-100

Product combination

Precision Gearheads / Lead Screws	Encoders	Drive Electronics	Cables / Accessories
10/1 12/3 12/4 12/5 10L ... SL	PA2-100	SC 1801 P SC 1801 S MC 3001 B MC 3001 P	To view our large range of accessory parts, please refer to the "Accessories" chapter.

© DR. FRITZ FAULHABER GMBH & CO. KG
Specifications subject to change without notice.

DC-Micromotors

1,32 mNm

Precious Metal Commutation

3,08 W

Series 1319 ... SR

Values at 22°C and nominal voltage	1319 T		006 SR	012 SR	024 SR	
Nominal voltage	U_N		6	12	24	V
Terminal resistance	R		8,26	34,6	119	Ω
Rotor inductance	L		127	533	1 630	µH
Efficiency, max.	$\eta_{max.}$		63	62	63	%
No-load current, typ.	I_0		0,0313	0,0153	0,0087	A
No-load speed	n_0		13 200	12 800	14 700	min⁻¹
Stall torque	M_H		2,9	2,84	2,91	mNm
Rotor inertia	J		0,4	0,4	0,36	gcm²
Friction torque	M_R		0,13	0,13	0,13	mNm
Torque constant	k_M		4,18	8,58	15	mNm/A
Speed constant	k_n		2 290	1 110	636	min⁻¹/V
Slope of n-M curve	$\Delta n/\Delta M$		4 520	4 490	5 020	min⁻¹/mNm
Thermal resistance:						
– winding to housing	R_{th1}	15				K/W
– housing to ambient (external plastic flange)	$R_{th2\,p}$	37				K/W
– housing to ambient (external metal flange)	$R_{th2\,m}$	3,9				K/W
Thermal time constant:						
– winding	τ_{w1}	6,8				s
– housing (external plastic flange)	$\tau_{w2\,p}$	190				s
– housing (external metal flange)	$\tau_{w2\,m}$	20				s
Operating temperature range:						
– motor		-30 ... +85 (optional version -30 ... +125)				°C
– winding, max. permissible		+125				°C
Shaft bearings		sintered bearings	ball bearings, preloaded			
Shaft diameter		1,5	1,5			mm
Radial shaft load max.:						
– dynamic at 3 000 min⁻¹ (3 mm from bearing)		1,2	5			N
Axial shaft load max.:						
– dynamic at 3 000 min⁻¹		0,2	0,5			N
– static (shaft unsupported)		20	10			N
Shaft play, max.:						
– radial		0,03	0,015			mm
– axial		0,2	0			mm
Speed up to	$n_{max.}$	17 000				min⁻¹
Number of pole pairs		1				
Mass		12				g
Housing material		steel, nickel plated				
Magnet material		NdFeB				

Rated values for continuous operation						
Rated torque	M_N		1,32	1,32	1,24	mNm
Rated current (thermal limit)	I_N		0,383	0,187	0,101	A
Rated speed	n_N		4 410	4 040	5 600	min⁻¹

Note: Rated values are calculated with nominal voltage and at a 22°C ambient temperature. The $R_{th2\,p}$ value has been reduced by 0%.

Note:

The diagram indicates the recommended speed in relation to the available torque at the output shaft for a given ambient temperature of 22°C.

The diagram shows the motor in different conditions of thermal coupling, i.e. mounted respectively on a plastic flange and a metal flange.

The nominal voltage (U_N) curve shows, up to the thermal limit, the operating point at nominal voltage for the motor mounted on a plastic flange. Higher torque can be achieved by further reducing the thermal resistance.

Any points of operation above the curve at nominal voltage will require a higher operating voltage. Any points below the nominal voltage curve will require less voltage.

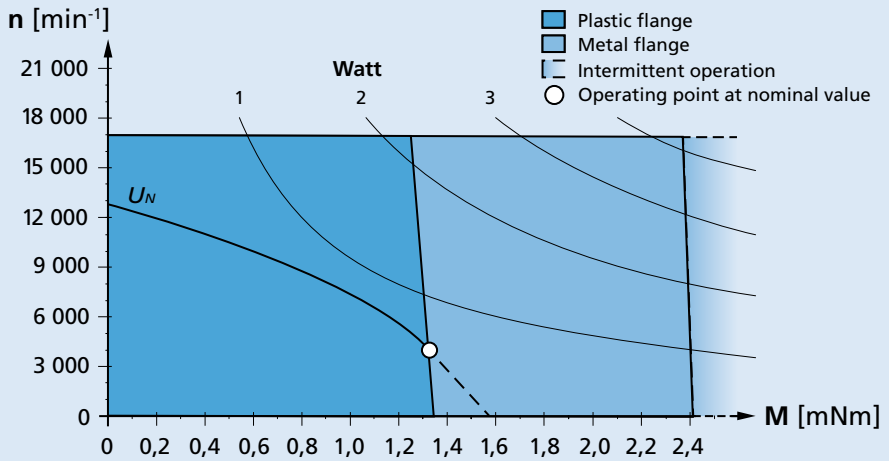

Recommended operation areas (example: nominal voltage 12V)

© DR. FRITZ FAULHABER GMBH & CO. KG
Specifications subject to change without notice.

Dimensional drawing

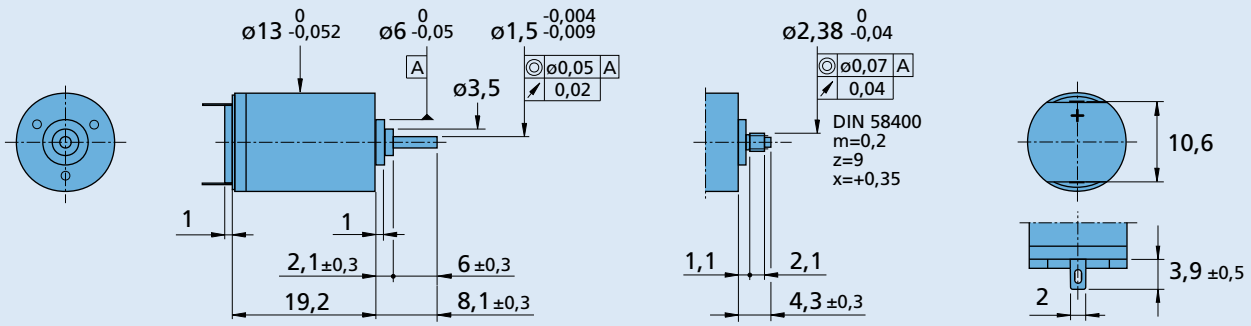

1319 T ... SR **1319 E ... SR**

Options

Example product designation: **1319T012SR-277**

Option	Type	Description
L	Twin Leads	For motors with twin leads (PVC), length 150 mm, red (+) / black (-)
4924	Twin Leads	For motors with twin leads (PVC), length 300 mm, red (+) / black (-)
X4924	Twin Leads	For motors with twin leads (PVC), length 600 mm, red (+) / black (-)
4925	Twin Leads	For motors with twin leads (PVC), length 150 mm, red (+) / black (-), with connector AMP 179228-2
X4925	Twin Leads	For motors with twin leads (PVC), length 300 mm, red (+) / black (-), with connector AMP 179228-2
Y4925	Twin Leads	For motors with twin leads (PVC), length 600 mm, red (+) / black (-), with connector AMP 179228-2
F	Single Leads	For motors with single leads (PTFE), length 150 mm, red (+) / black (-)
277	Bearings	2 preloaded ball bearings

Product combination

Precision Gearheads / Lead Screws	Encoders	Drive Electronics	Cables / Accessories
13A 14/1 15/5 15/5 S	IE2-400	SC 1801 P SC 1801 S MC 3001 B MC 3001 P MC 3603 S MC 5004 P	To view our large range of accessory parts, please refer to the “Accessories” chapter.

© DR. FRITZ FAULHABER GMBH & CO. KG
Specifications subject to change without notice.

DC-Micromotors

Precious Metal Commutation

3,44 mNm

5,14 W

Series 1331 ... SR

Values at 22°C and nominal voltage	1331 T		006 SR	012 SR	024 SR	
Nominal voltage	U_N		6	12	24	V
Terminal resistance	R		2,83	13,7	52,9	Ω
Rotor inductance	L		70	310	1 100	µH
Efficiency, max.	$\eta_{max.}$		80	79	79	%
No-load current, typ.	I_0		0,0226	0,0105	0,0055	A
No-load speed	n_0		10 700	9 910	10 500	min⁻¹
Stall torque	M_H		11,2	9,94	9,74	mNm
Rotor inertia	J		0,71	0,67	0,63	gcm²
Friction torque	M_R		0,12	0,12	0,12	mNm
Torque constant	k_M		5,33	11,5	21,7	mNm/A
Speed constant	k_n		1 790	833	439	min⁻¹/V
Slope of n-M curve	$\Delta n/\Delta M$		950	993	1 070	min⁻¹/mNm
Thermal resistance:						
– winding to housing	R_{th1}	11				K/W
– housing to ambient (external plastic flange)	$R_{th2\,p}$	28				K/W
– housing to ambient (external metal flange)	$R_{th2\,m}$	6				K/W
Thermal time constant:						
– winding	τ_{w1}	8,1				s
– housing (external plastic flange)	$\tau_{w2\,p}$	220				s
– housing (external metal flange)	$\tau_{w2\,m}$	48				s
Operating temperature range:						
– motor		-30 ... +85 (optional version -30 ... +125)				°C
– winding, max. permissible		+125				°C
Shaft bearings		sintered bearings	ball bearings, preloaded			
Shaft diameter		1,5	1,5			mm
Radial shaft load max.:						
– dynamic at 3 000 min⁻¹ (3 mm from bearing)		1,2	5			N
Axial shaft load max.:						
– dynamic at 3 000 min⁻¹		0,2	0,5			N
– static (shaft unsupported)		20	10			N
Shaft play, max.:						
– radial		0,03	0,015			mm
– axial		0,2	0			mm
Speed up to	$n_{max.}$	12 000				min⁻¹
Number of pole pairs		1				
Mass		19				g
Housing material		steel, nickel plated				
Magnet material		NdFeB				

Rated values for continuous operation						
Rated torque	M_N		1,96	3,44	3,31	mNm
Rated current (thermal limit)	I_N		0,4	0,343	0,174	A
Rated speed	n_N		8 750	5 260	5 650	min⁻¹

Note: Rated values are calculated with nominal voltage and at a 22°C ambient temperature. The $R_{th2\,p}$ value has been reduced by 0%.

Note:

The diagram indicates the recommended speed in relation to the available torque at the output shaft for a given ambient temperature of 22°C.

The diagram shows the motor in different conditions of thermal coupling, i.e. mounted respectively on a plastic flange and a metal flange.

The nominal voltage (U_N) curve shows, up to the thermal limit, the operating point at nominal voltage for the motor mounted on a plastic flange. Higher torque can be achieved by further reducing the thermal resistance.

Any points of operation above the curve at nominal voltage will require a higher operating voltage. Any points below the nominal voltage curve will require less voltage.

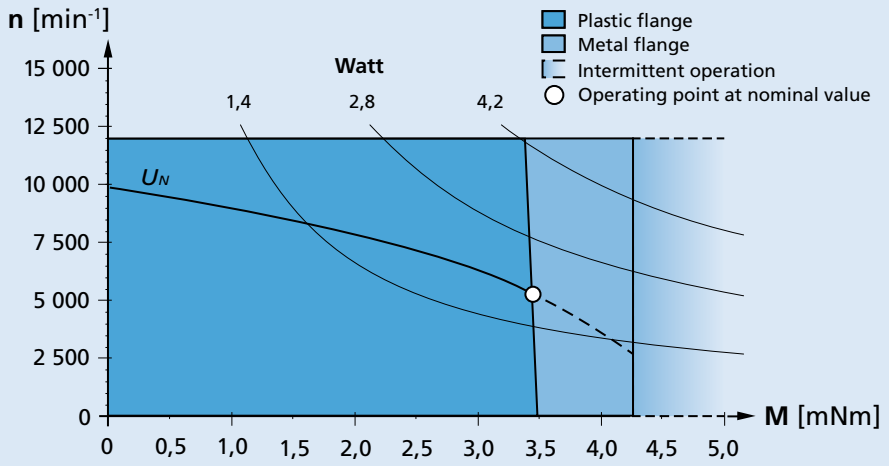

Recommended operation areas (example: nominal voltage 12V)

For notes on technical data and lifetime performance refer to "Technical Information".

Backwards

© DR. FRITZ FAULHABER GMBH & CO. KG
Specifications subject to change without notice.

Dimensional drawing

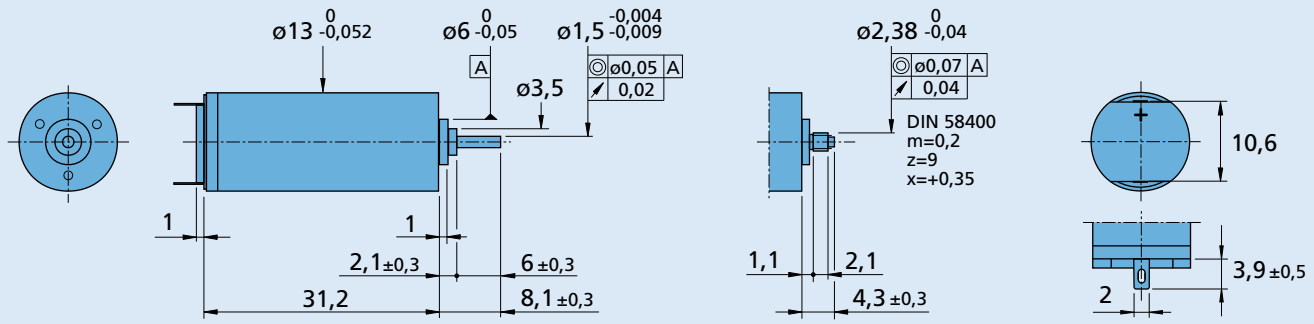

1331 T ... SR **1331 E ... SR**

Options

Example product designation: **1331T012SR-277**

Option	Type	Description
L	Twin Leads	For motors with twin leads (PVC), length 150 mm, red (+) / black (-)
4924	Twin Leads	For motors with twin leads (PVC), length 300 mm, red (+) / black (-)
X4924	Twin Leads	For motors with twin leads (PVC), length 600 mm, red (+) / black (-)
4925	Twin Leads	For motors with twin leads (PVC), length 150 mm, red (+) / black (-), with connector AMP 179228-2
X4925	Twin Leads	For motors with twin leads (PVC), length 300 mm, red (+) / black (-), with connector AMP 179228-2
Y4925	Twin Leads	For motors with twin leads (PVC), length 600 mm, red (+) / black (-), with connector AMP 179228-2
F	Single Leads	For motors with single leads (PTFE), length 150 mm, red (+) / black (-)
277	Bearings	2 preloaded ball bearings

Product combination

Precision Gearheads / Lead Screws	Encoders	Drive Electronics	Cables / Accessories
13A 14/1 15/5 15/5 S	IE2-400	SC 1801 P SC 1801 S MC 3001 B MC 3001 P MC 3603 S MC 5004 P	To view our large range of accessory parts, please refer to the “Accessories” chapter.

© DR. FRITZ FAULHABER GMBH & CO. KG
Specifications subject to change without notice.

DC-Micromotors

Precious Metal Commutation

0,918 mNm

2 W

Series 1516 ... SR

Values at 22°C and nominal voltage	1516 T		006 SR	009 SR	012 SR	
Nominal voltage	U_N		6	9	12	V
Terminal resistance	R		14,1	32,5	60,5	Ω
Rotor inductance	L		99,1	229	406	µH
Efficiency, max.	$\eta_{max.}$		54	54	53	%
No-load current, typ.	I_0		0,0294	0,0193	0,0145	A
No-load speed	n_0		13 000	12 900	12 800	min⁻¹
Stall torque	M_H		1,63	1,61	1,53	mNm
Rotor inertia	J		0,4	0,42	0,4	gcm²
Friction torque	M_R		0,12	0,12	0,12	mNm
Torque constant	k_M		4,12	6,25	8,33	mNm/A
Speed constant	k_n		2 320	1 530	1 150	min⁻¹/V
Slope of n-M curve	$\Delta n/\Delta M$		7 970	7 950	8 330	min⁻¹/mNm
Thermal resistance:						
– winding to housing	R_{th1}	15				K/W
– housing to ambient (external plastic flange)	$R_{th2\,p}$	38				K/W
– housing to ambient (external metal flange)	$R_{th2\,m}$	1,8				K/W
Thermal time constant:						
– winding	τ_{w1}	4,8				s
– housing (external plastic flange)	$\tau_{w2\,p}$	210				s
– housing (external metal flange)	$\tau_{w2\,m}$	10				s
Operating temperature range:						
– motor		-30 ... +85 (optional version -30 ... +125)				°C
– winding, max. permissible		+125				°C
Shaft bearings		sintered bearings	ball bearings, preloaded			
Shaft diameter		1,5	1,5			mm
Radial shaft load max.:						
– dynamic at 3 000 min⁻¹ (3 mm from bearing)		1,2	5			N
Axial shaft load max.:						
– dynamic at 3 000 min⁻¹		0,2	0,5			N
– static (shaft unsupported)		20	10			N
Shaft play, max.:						
– radial		0,03	0,015			mm
– axial		0,2	0			mm
Speed up to	$n_{max.}$	15 000				min⁻¹
Number of pole pairs		1				
Mass		13				g
Housing material		steel, nickel plated				
Magnet material		NdFeB				

Rated values for continuous operation						
Rated torque	M_N		0,918	0,912	0,876	mNm
Rated current (thermal limit)	I_N		0,275	0,18	0,13	A
Rated speed	n_N		2 500	2 500	2 500	min⁻¹

Note: Rated values are calculated with nominal voltage and at a 22°C ambient temperature. The $R_{th2\,p}$ value has been reduced by 0%.

Note:

The diagram indicates the recommended speed in relation to the available torque at the output shaft for a given ambient temperature of 22°C.

The diagram shows the motor in different conditions of thermal coupling, i.e. mounted respectively on a plastic flange and a metal flange.

The nominal voltage (U_N) curve shows, up to the thermal limit, the operating point at nominal voltage for the motor mounted on a plastic flange. Higher torque can be achieved by further reducing the thermal resistance.

Any points of operation above the curve at nominal voltage will require a higher operating voltage. Any points below the nominal voltage curve will require less voltage.

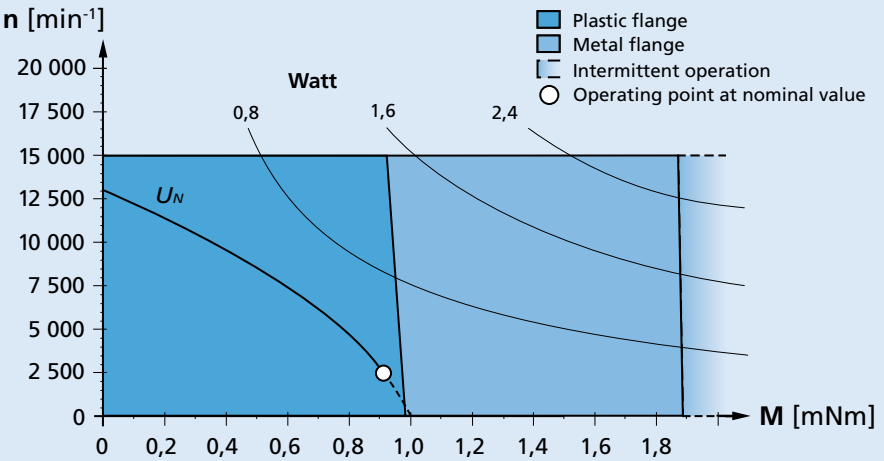

Recommended operation areas (example: nominal voltage 6V)

For notes on technical data and lifetime performance refer to "Technical Information".

© DR. FRITZ FAULHABER GMBH & CO. KG
Specifications subject to change without notice.

Dimensional drawing

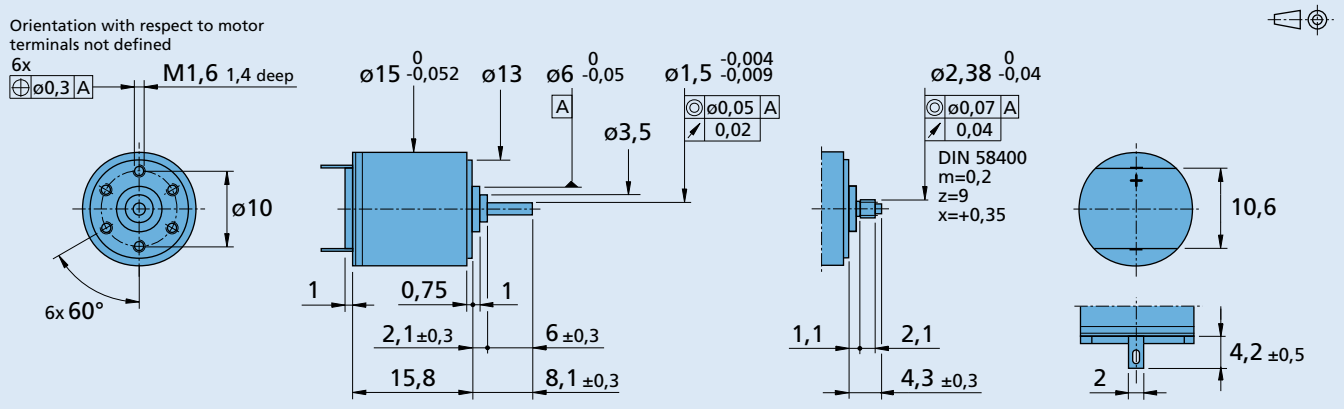

1516 T ... SR **1516 E ... SR**

Options

Example product designation: **1516T012SR-277**

Option	Type	Description
L	Twin Leads	For motors with twin leads (PVC), length 150 mm, red (+) / black (-)
4924	Twin Leads	For motors with twin leads (PVC), length 300 mm, red (+) / black (-)
X4924	Twin Leads	For motors with twin leads (PVC), length 600 mm, red (+) / black (-)
4925	Twin Leads	For motors with twin leads (PVC), length 150 mm, red (+) / black (-), with connector AMP 179228-2
X4925	Twin Leads	For motors with twin leads (PVC), length 300 mm, red (+) / black (-), with connector AMP 179228-2
Y4925	Twin Leads	For motors with twin leads (PVC), length 600 mm, red (+) / black (-), with connector AMP 179228-2
F	Single Leads	For motors with single leads (PTFE), length 150 mm, red (+) / black (-)
277	Bearings	2 preloaded ball bearings

Product combination

Precision Gearheads / Lead Screws	Encoders	Drive Electronics	Cables / Accessories
15A 15/5 15/5 S 15/8 15/10 16A 16/7	IE2-1024 IEH2-4096 IEH3-4096 IEH3-4096L	SC 1801 P SC 1801 S MC 3001 B MC 3001 P MC 3603 S MC 5004 P	To view our large range of accessory parts, please refer to the “Accessories” chapter.

© DR. FRITZ FAULHABER GMBH & CO. KG
Specifications subject to change without notice.

DC-Micromotors

2,87 mNm

Precious Metal Commutation

5 W

Series 1524 ... SR

Values at 22°C and nominal voltage	1524 T	003 SR	006 SR	009 SR	012 SR	018 SR	024 SR	
Nominal voltage	U_N	3	6	9	12	18	24	V
Terminal resistance	R	1,14	5,15	10,6	19,8	44	79,3	Ω
Rotor inductance	L	22	110	230	420	950	1 670	µH
Efficiency, max.	$\eta_{max.}$	80	80	80	80	80	80	%
No-load current, typ.	I_0	0,0301	0,0134	0,0094	0,007	0,0046	0,0035	A
No-load speed	n_0	10 700	9 480	9 980	9 850	9 790	9 850	min⁻¹
Stall torque	M_H	6,93	6,9	7,19	6,92	7,05	6,9	mNm
Rotor inertia	J	0,53	0,58	0,57	0,56	0,57	0,56	gcm²
Friction torque	M_R	0,08	0,08	0,08	0,08	0,08	0,08	mNm
Torque constant	k_M	2,66	5,99	8,54	11,5	17,4	23,1	mNm/A
Speed constant	k_n	3 590	1 600	1 120	828	549	414	min⁻¹/V
Slope of n-M curve	$\Delta n/\Delta M$	1 540	1 370	1 380	1 420	1 390	1 420	min⁻¹/mNm
Thermal resistance:								
– winding to housing	R_{th1}	12						K/W
– housing to ambient (external plastic flange)	$R_{th2\,p}$	30						K/W
– housing to ambient (external metal flange)	$R_{th2\,m}$	3,9						K/W
Thermal time constant:								
– winding	τ_{w1}	6,9						s
– housing (external plastic flange)	$\tau_{w2\,p}$	230						s
– housing (external metal flange)	$\tau_{w2\,m}$	30						s
Operating temperature range:								
– motor		-30 ... +85 (optional version -30 ... +125)						°C
– winding, max. permissible		+125						°C
Shaft bearings		sintered bearings			ball bearings, preloaded			
Shaft diameter		1,5			1,5			mm
Radial shaft load max.:								
– dynamic at 3 000 min⁻¹ (3 mm from bearing)		1,2			5			N
Axial shaft load max.:								
– dynamic at 3 000 min⁻¹		0,2			0,5			N
– static (shaft unsupported)		20			10			N
Shaft play, max.:								
– radial		0,03			0,015			mm
– axial		0,2			0			mm
Speed up to	$n_{max.}$	13 000						min⁻¹
Number of pole pairs		1						
Mass		18						g
Housing material		steel, nickel plated						
Magnet material		NdFeB						

Rated values for continuous operation								
Rated torque	M_N	1,73	2,87	2,85	2,82	2,85	2,81	mNm
Rated current (thermal limit)	I_N	0,7	0,545	0,38	0,278	0,186	0,139	A
Rated speed	n_N	7 830	3 930	4 460	4 230	4 240	4 220	min⁻¹

Note: Rated values are calculated with nominal voltage and at a 22°C ambient temperature. The $R_{th2\,p}$ value has been reduced by 0%.

Note:

The diagram indicates the recommended speed in relation to the available torque at the output shaft for a given ambient temperature of 22°C.

The diagram shows the motor in different conditions of thermal coupling, i.e. mounted respectively on a plastic flange and a metal flange.

The nominal voltage (U_N) curve shows, up to the thermal limit, the operating point at nominal voltage for the motor mounted on a plastic flange. Higher torque can be achieved by further reducing the thermal resistance.

Any points of operation above the curve at nominal voltage will require a higher operating voltage. Any points below the nominal voltage curve will require less voltage.

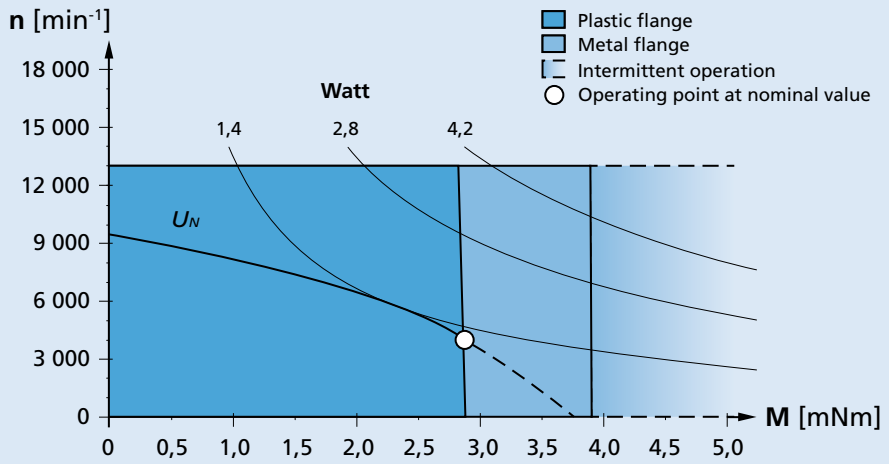

Recommended operation areas (example: nominal voltage 6V)

For notes on technical data and lifetime performance refer to "Technical Information".

Backwards

© DR. FRITZ FAULHABER GMBH & CO. KG
Specifications subject to change without notice.

Dimensional drawing

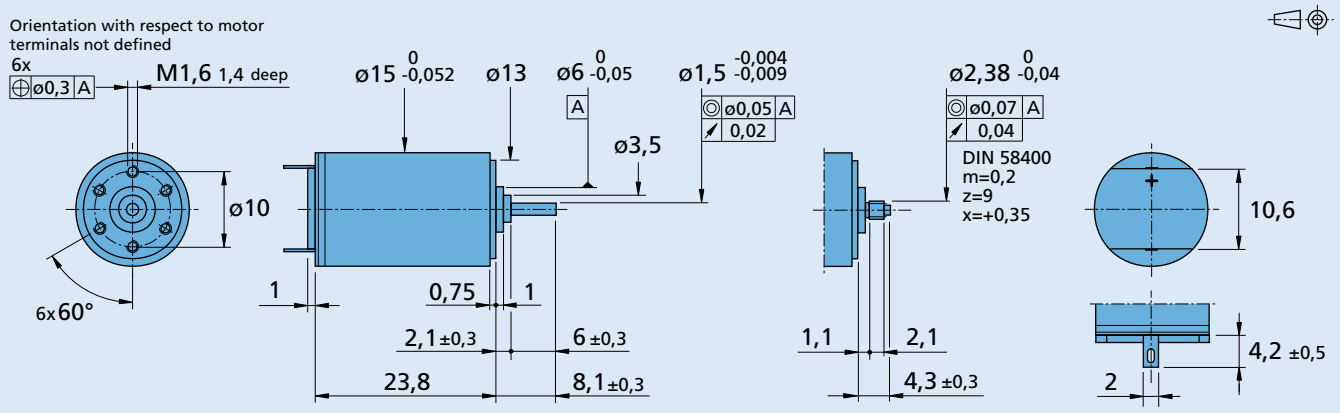

1524 T ... SR **1524 E ... SR**

Options

Example product designation: **1524T012SR-277**

Option	Type	Description
L	Twin Leads	For motors with twin leads (PVC), length 150 mm, red (+) / black (-)
4924	Twin Leads	For motors with twin leads (PVC), length 300 mm, red (+) / black (-)
X4924	Twin Leads	For motors with twin leads (PVC), length 600 mm, red (+) / black (-)
4925	Twin Leads	For motors with twin leads (PVC), length 150 mm, red (+) / black (-), with connector AMP 179228-2
X4925	Twin Leads	For motors with twin leads (PVC), length 300 mm, red (+) / black (-), with connector AMP 179228-2
Y4925	Twin Leads	For motors with twin leads (PVC), length 600 mm, red (+) / black (-), with connector AMP 179228-2
F	Single Leads	For motors with single leads (PTFE), length 150 mm, red (+) / black (-)
277	Bearings	2 preloaded ball bearings

Product combination

Precision Gearheads / Lead Screws	Encoders	Drive Electronics	Cables / Accessories
15A 15/5 15/5 S 15/8 15/10 16A 16/7	IE2-1024 IEH2-4096 IEH3-4096 IEH3-4096L	SC 1801 P SC 1801 S MC 3001 B MC 3001 P MC 3603 S MC 5004 P	To view our large range of accessory parts, please refer to the “Accessories” chapter.

© DR. FRITZ FAULHABER GMBH & CO. KG
Specifications subject to change without notice.

DC-Micromotors

Precious Metal Commutation

1,86 mNm

4,09 W

Series 1717 ... SR

Values at 22°C and nominal voltage	1717 T		003 SR	006 SR	012 SR	018 SR	024 SR	
Nominal voltage	U_N		3	6	12	18	24	V
Terminal resistance	R		1,07	4,31	17,2	50,2	69	Ω
Rotor inductance	L		16,4	65,6	263	766	1 050	µH
Efficiency, max.	$\eta_{max.}$		67	67	67	65	68	%
No-load current, typ.	I_0		0,0918	0,0459	0,0229	0,0134	0,0108	A
No-load speed	n_0		14 100	14 100	14 100	12 300	14 100	min⁻¹
Stall torque	M_H		5,35	5,33	5,35	4,67	5,34	mNm
Rotor inertia	J		0,59	0,58	0,59	0,58	0,59	gcm²
Friction torque	M_R		0,18	0,18	0,18	0,18	0,17	mNm
Torque constant	k_M		1,98	3,96	7,92	13,5	15,8	mNm/A
Speed constant	k_n		4 820	2 410	1 210	706	603	min⁻¹/V
Slope of n-M curve	$\Delta n/\Delta M$		2 610	2 630	2 620	2 620	2 630	min⁻¹/mNm
Thermal resistance:								
– winding to housing	R_{th1}	13						K/W
– housing to ambient (external plastic flange)	$R_{th2\,p}$	32						K/W
– housing to ambient (external metal flange)	$R_{th2\,m}$	2,6						K/W
Thermal time constant:								
– winding	τ_{w1}	6,4						s
– housing (external plastic flange)	$\tau_{w2\,p}$	250						s
– housing (external metal flange)	$\tau_{w2\,m}$	20						s
Operating temperature range:								
– motor		-30 ... +85 (optional version -30 ... +125)						°C
– winding, max. permissible		+125						°C
Shaft bearings		sintered bearings			ball bearings, preloaded			
Shaft diameter		1,5			1,5			mm
Radial shaft load max.:								
– dynamic at 3 000 min⁻¹ (3 mm from bearing)		1,2			5			N
Axial shaft load max.:								
– dynamic at 3 000 min⁻¹		0,2			0,5			N
– static (shaft unsupported)		20			10			N
Shaft play, max.:								
– radial		0,03			0,015			mm
– axial		0,2			0			mm
Speed up to	$n_{max.}$	16 000						min⁻¹
Number of pole pairs		1						
Mass		18						g
Housing material		steel, nickel plated						
Magnet material		NdFeB						

Rated values for continuous operation								
Rated torque	M_N		1,16	1,84	1,84	1,86	1,85	mNm
Rated current (thermal limit)	I_N		0,7	0,564	0,282	0,167	0,141	A
Rated speed	n_N		10 800	7 290	7 310	5 260	7 280	min⁻¹

Note: Rated values are calculated with nominal voltage and at a 22°C ambient temperature. The $R_{th2\,p}$ value has been reduced by 0%.

Note:

The diagram indicates the recommended speed in relation to the available torque at the output shaft for a given ambient temperature of 22°C.

The diagram shows the motor in different conditions of thermal coupling, i.e. mounted respectively on a plastic flange and a metal flange.

The nominal voltage (U_N) curve shows, up to the thermal limit, the operating point at nominal voltage for the motor mounted on a plastic flange. Higher torque can be achieved by further reducing the thermal resistance.

Any points of operation above the curve at nominal voltage will require a higher operating voltage. Any points below the nominal voltage curve will require less voltage.

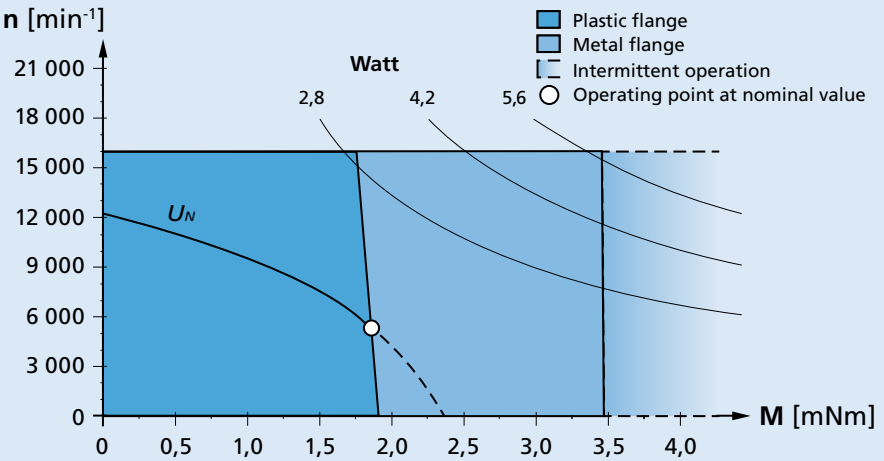

Recommended operation areas (example: nominal voltage 18V)

© DR. FRITZ FAULHABER GMBH & CO. KG
Specifications subject to change without notice.

Dimensional drawing

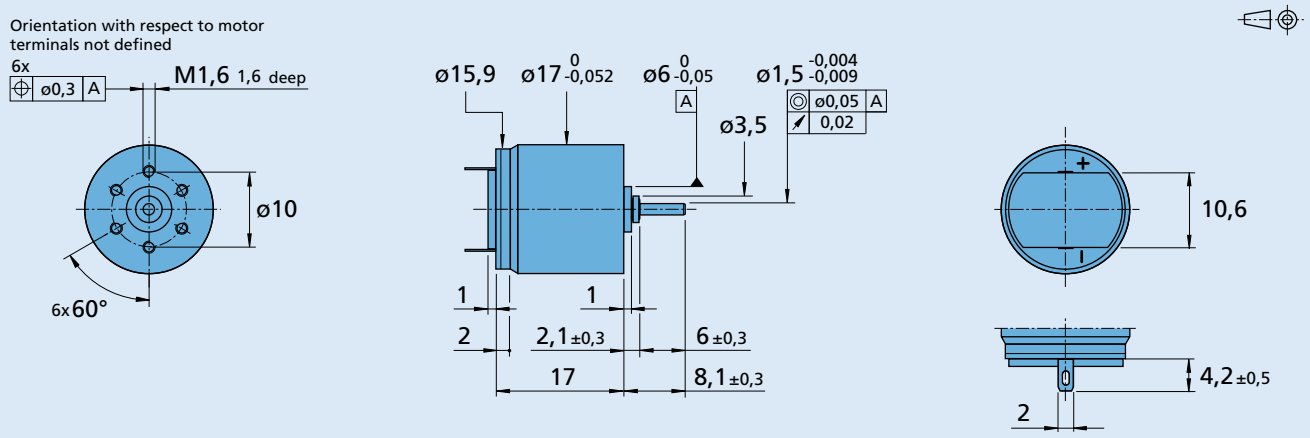

1717 T ... SR

Options

Example product designation: **1717T012SR-277**

Option	Type	Description
L	Twin Leads	For motors with twin leads (PVC), length 150 mm, red (+) / black (-)
4924	Twin Leads	For motors with twin leads (PVC), length 300 mm, red (+) / black (-)
X4924	Twin Leads	For motors with twin leads (PVC), length 600 mm, red (+) / black (-)
4925	Twin Leads	For motors with twin leads (PVC), length 150 mm, red (+) / black (-), with connector AMP 179228-2
X4925	Twin Leads	For motors with twin leads (PVC), length 300 mm, red (+) / black (-), with connector AMP 179228-2
Y4925	Twin Leads	For motors with twin leads (PVC), length 600 mm, red (+) / black (-), with connector AMP 179228-2
F	Single Leads	For motors with single leads (PTFE), length 150 mm, red (+) / black (-)
277	Bearings	2 preloaded ball bearings

Product combination

Precision Gearheads / Lead Screws	Encoders	Drive Electronics	Cables / Accessories
15A 15/10 16A 16/7 17/1	IE2-1024 IEH2-4096 IEH3-4096 IEH3-4096L	SC 1801 P SC 1801 S MC 3001 B MC 3001 P MC 3603 S MC 5004 P	To view our large range of accessory parts, please refer to the “Accessories” chapter.

© DR. FRITZ FAULHABER GMBH & CO. KG
Specifications subject to change without notice.

DC-Micromotors

Precious Metal Commutation

4,13 mNm

5,68 W

Series 1724 ... SR

Values at 22°C and nominal voltage	1724 T		003 SR	006 SR	012 SR	018 SR	024 SR	
Nominal voltage	U_N		3	6	12	18	24	V
Terminal resistance	R		0,775	3,4	16,1	31,9	54,4	Ω
Rotor inductance	L		20,7	75,6	360	712	1 210	µH
Efficiency, max.	$\eta_{max.}$		81	80	79	80	80	%
No-load current, typ.	I_0		0,0379	0,0198	0,0091	0,006	0,005	A
No-load speed	n_0		8 270	8 630	7 900	8 450	8 630	min⁻¹
Stall torque	M_H		13,2	11,5	10,6	11,3	11,5	mNm
Rotor inertia	J		1,2	1	1	1	1	gcm²
Friction torque	M_R		0,13	0,13	0,13	0,12	0,13	mNm
Torque constant	k_M		3,44	6,58	14,4	20,2	26,3	mNm/A
Speed constant	k_n		2 770	1 450	665	473	363	min⁻¹/V
Slope of n-M curve	$\Delta n/\Delta M$		624	749	745	747	748	min⁻¹/mNm
Thermal resistance:								
– winding to housing	R_{th1}	10						K/W
– housing to ambient (external plastic flange)	$R_{th2\,p}$	27						K/W
– housing to ambient (external metal flange)	$R_{th2\,m}$	3,1						K/W
Thermal time constant:								
– winding	τ_{w1}	7,2						s
– housing (external plastic flange)	$\tau_{w2\,p}$	310						s
– housing (external metal flange)	$\tau_{w2\,m}$	36						s
Operating temperature range:								
– motor		-30 ... +85 (optional version -30 ... +125)						°C
– winding, max. permissible		+125						°C
Shaft bearings		sintered bearings			ball bearings, preloaded			
Shaft diameter		1,5			1,5			mm
Radial shaft load max.:								
– dynamic at 3 000 min⁻¹ (3 mm from bearing)		1,2			5			N
Axial shaft load max.:								
– dynamic at 3 000 min⁻¹		0,2			0,5			N
– static (shaft unsupported)		20			10			N
Shaft play, max.:								
– radial		0,03			0,015			mm
– axial		0,2			0			mm
Speed up to	$n_{max.}$	10 000						min⁻¹
Number of pole pairs		1						
Mass		27						g
Housing material		steel, nickel plated						
Magnet material		NdFeB						

Rated values for continuous operation								
Rated torque	M_N		2,23	4,06	4,13	4,13	4,12	mNm
Rated current (thermal limit)	I_N		0,7	0,7	0,328	0,233	0,178	A
Rated speed	n_N		6 850	4 540	3 610	4 200	4 420	min⁻¹

Note: Rated values are calculated with nominal voltage and at a 22°C ambient temperature. The $R_{th2\,p}$ value has been reduced by 0%.

Note:

The diagram indicates the recommended speed in relation to the available torque at the output shaft for a given ambient temperature of 22°C.

The diagram shows the motor in different conditions of thermal coupling, i.e. mounted respectively on a plastic flange and a metal flange.

The nominal voltage (U_N) curve shows, up to the thermal limit, the operating point at nominal voltage for the motor mounted on a plastic flange. Higher torque can be achieved by further reducing the thermal resistance.

Any points of operation above the curve at nominal voltage will require a higher operating voltage. Any points below the nominal voltage curve will require less voltage.

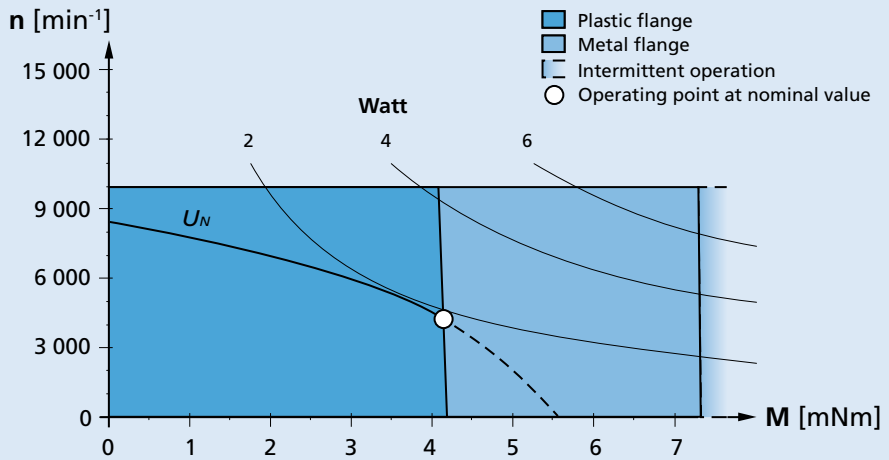

Recommended operation areas (example: nominal voltage 18V)

For notes on technical data and lifetime performance refer to "Technical Information".

© DR. FRITZ FAULHABER GMBH & CO. KG
Specifications subject to change without notice.

Dimensional drawing

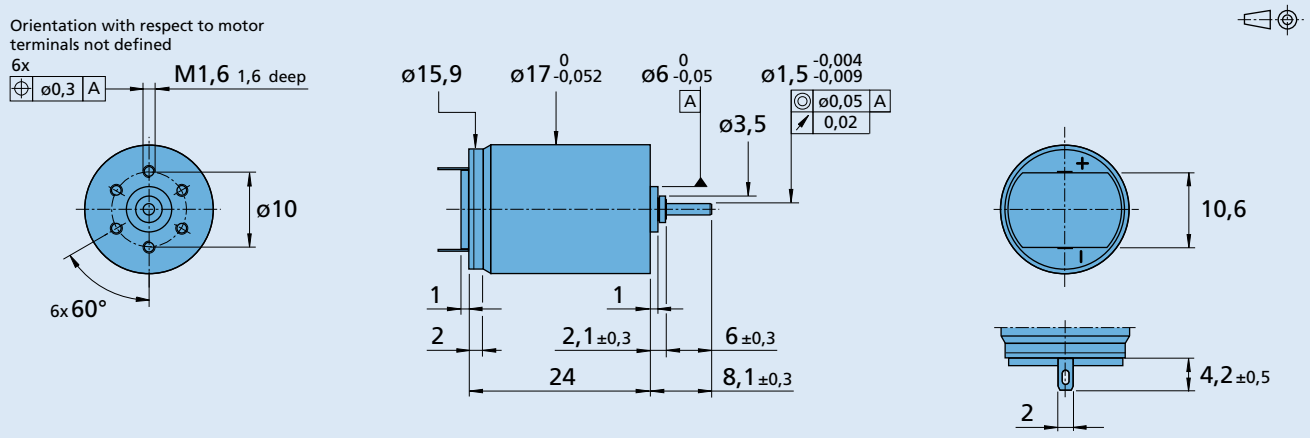

1724 T ... SR

Options

Example product designation: **1724T012SR-277**

Option	Type	Description
L	Twin Leads	For motors with twin leads (PVC), length 150 mm, red (+) / black (-)
4924	Twin Leads	For motors with twin leads (PVC), length 300 mm, red (+) / black (-)
X4924	Twin Leads	For motors with twin leads (PVC), length 600 mm, red (+) / black (-)
4925	Twin Leads	For motors with twin leads (PVC), length 150 mm, red (+) / black (-), with connector AMP 179228-2
X4925	Twin Leads	For motors with twin leads (PVC), length 300 mm, red (+) / black (-), with connector AMP 179228-2
Y4925	Twin Leads	For motors with twin leads (PVC), length 600 mm, red (+) / black (-), with connector AMP 179228-2
F	Single Leads	For motors with single leads (PTFE), length 150 mm, red (+) / black (-)
277	Bearings	2 preloaded ball bearings

Product combination

Precision Gearheads / Lead Screws	Encoders	Drive Electronics	Cables / Accessories
15A 15/10 16A 16/7 17/1	IE2-1024 IEH2-4096 IEH3-4096 IEH3-4096L	SC 1801 P SC 1801 S MC 3001 B MC 3001 P MC 3603 S MC 5004 P	To view our large range of accessory parts, please refer to the “Accessories” chapter.

© DR. FRITZ FAULHABER GMBH & CO. KG
Specifications subject to change without notice.

DC-Micromotors

Precious Metal Commutation

6,29 mNm

7,83 W

Series 2224 ... SR

Values at 22°C and nominal voltage	2224 U	003 SR	006 SR	012 SR	018 SR	024 SR	036 SR	
Nominal voltage	U_N	3	6	12	18	24	36	V
Terminal resistance	R	0,564	1,95	8,77	17,6	36,1	90,3	Ω
Rotor inductance	L	11,5	46	203	421	791	1 810	µH
Efficiency, max.	$\eta_{max.}$	79	82	81	81	81	79	%
No-load current, typ.	I_0	0,0665	0,0289	0,0138	0,01	0,007	0,0051	A
No-load speed	n_0	8 180	8 200	7 810	8 130	7 890	7 820	min⁻¹
Stall torque	M_H	18,2	21,1	19,8	21,2	19	17,2	mNm
Rotor inertia	J	2,4	2,7	2,7	2,8	2,6	2,3	gcm²
Friction torque	M_R	0,23	0,2	0,2	0,21	0,2	0,22	mNm
Torque constant	k_M	3,47	6,95	14,6	21	28,8	43,6	mNm/A
Speed constant	k_n	2 750	1 370	655	454	331	219	min⁻¹/V
Slope of n-M curve	$\Delta n/\Delta M$	447	386	393	381	415	454	min⁻¹/mNm
Thermal resistance:								
– winding to housing	R_{th1}	8,4						K/W
– housing to ambient (external plastic flange)	$R_{th2\,p}$	22						K/W
– housing to ambient (external metal flange)	$R_{th2\,m}$	1,5						K/W
Thermal time constant:								
– winding	τ_{w1}	12						s
– housing (external plastic flange)	$\tau_{w2\,p}$	430						s
– housing (external metal flange)	$\tau_{w2\,m}$	30						s
Operating temperature range:								
– motor		-30 ... +85 (optional version -30 ... +125)						°C
– winding, max. permissible		+125						°C
Shaft bearings		sintered bearings			ball bearings, preloaded			
Shaft diameter		2			2			mm
Radial shaft load max.:								
– dynamic at 3 000 min⁻¹ (3 mm from bearing)		1,5			8			N
Axial shaft load max.:								
– dynamic at 3 000 min⁻¹		0,2			0,8			N
– static (shaft unsupported)		20			10			N
Shaft play, max.:								
– radial		0,03			0,015			mm
– axial		0,2			0			mm
Speed up to	$n_{max.}$	9 000						min⁻¹
Number of pole pairs		1						
Mass		46						g
Housing material		steel, nickel plated						
Magnet material		NdFeB						

Rated values for continuous operation								
Rated torque	M_N	2,17	4,47	6,21	6,29	6,04	5,78	mNm
Rated current (thermal limit)	I_N	0,7	0,7	0,485	0,341	0,239	0,152	A
Rated speed	n_N	7 210	6 350	4 560	4 990	4 550	4 270	min⁻¹

Note: Rated values are calculated with nominal voltage and at a 22°C ambient temperature. The $R_{th2\,p}$ value has been reduced by 0%.

Note:

The diagram indicates the recommended speed in relation to the available torque at the output shaft for a given ambient temperature of 22°C.

The diagram shows the motor in different conditions of thermal coupling, i.e. mounted respectively on a plastic flange and a metal flange.

The nominal voltage (U_N) curve shows, up to the thermal limit, the operating point at nominal voltage for the motor mounted on a plastic flange. Higher torque can be achieved by further reducing the thermal resistance.

Any points of operation above the curve at nominal voltage will require a higher operating voltage. Any points below the nominal voltage curve will require less voltage.

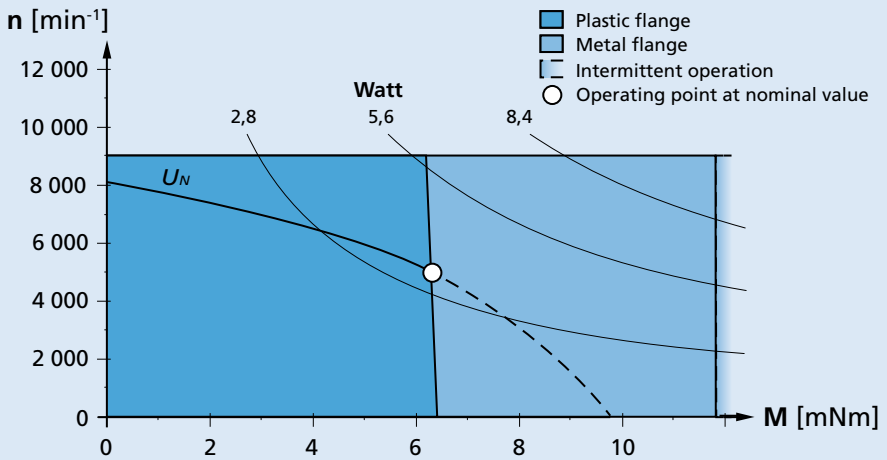

Recommended operation areas (example: nominal voltage 18V)

For notes on technical data and lifetime performance refer to "Technical Information".

Edition 2024 Apr. 02

Backwards

© DR. FRITZ FAULHABER GMBH & CO. KG
Specifications subject to change without notice.

www.faulhaber.com

Dimensional drawing

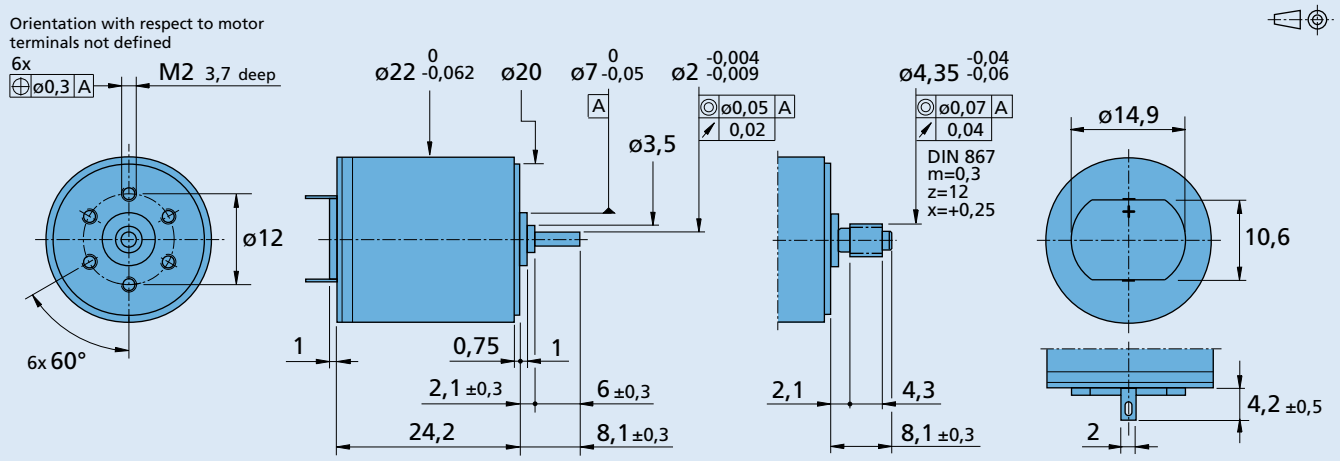

2224 U ... SR **2224 R ... SR**

Options

Example product designation: **2224U012SR-277**

Option	Type	Description
L	Twin Leads	For motors with twin leads (PVC), length 150 mm, red (+) / black (-)
4924	Twin Leads	For motors with twin leads (PVC), length 300 mm, red (+) / black (-)
X4924	Twin Leads	For motors with twin leads (PVC), length 600 mm, red (+) / black (-)
4925	Twin Leads	For motors with twin leads (PVC), length 150 mm, red (+) / black (-), with connector AMP 179228-2
X4925	Twin Leads	For motors with twin leads (PVC), length 300 mm, red (+) / black (-), with connector AMP 179228-2
Y4925	Twin Leads	For motors with twin leads (PVC), length 600 mm, red (+) / black (-), with connector AMP 179228-2
F	Single Leads	For motors with single leads (PTFE), length 150 mm, red (+) / black (-)
277	Bearings	2 preloaded ball bearings

Product combination

Precision Gearheads / Lead Screws	Encoders	Drive Electronics	Cables / Accessories
20/1R 22E 22EKV 22GPT 22/2 22/5 22/7 23/1	IE2-1024 IEH2-4096 IEH3-4096 IEH3-4096L	SC 1801 P SC 1801 S SC 2402 P SC 2804 S MC 3001 B MC 3001 P MC 3603 S MC 5004 P	To view our large range of accessory parts, please refer to the “Accessories” chapter.

© DR. FRITZ FAULHABER GMBH & CO. KG
Specifications subject to change without notice.

DC-Micromotors

10 mNm

Precious Metal Commutation

8,37 W

Series 2232 ... SR

Values at 22°C and nominal voltage	2232 U	006 SR	009 SR	012 SR	015 SR	018 SR	024 SR	
Nominal voltage	U_N	6	9	12	15	18	24	V
Terminal resistance	R	0,81	2,14	4,09	6,61	9,04	16,4	Ω
Rotor inductance	L	44,4	93,1	178	281	399	710	µH
Efficiency, max.	$\eta_{max.}$	87	85	85	85	85	85	%
No-load current, typ.	I_0	0,0352	0,0243	0,0176	0,014	0,0117	0,0088	A
No-load speed	n_0	7 160	7 410	7 150	7 100	7 150	7 150	min⁻¹
Stall torque	M_H	59	48,5	46,7	45,4	47,5	46,5	mNm
Rotor inertia	J	4,8	3,8	3,8	3,8	3,8	3,8	gcm²
Friction torque	M_R	0,28	0,28	0,28	0,28	0,28	0,28	mNm
Torque constant	k_M	8	11,6	16	20,1	24	32	mNm/A
Speed constant	k_n	1 190	825	597	474	398	299	min⁻¹/V
Slope of n-M curve	$\Delta n/\Delta M$	121	152	153	156	150	153	min⁻¹/mNm
Thermal resistance:								
– winding to housing	R_{th1}	6,9						K/W
– housing to ambient (external plastic flange)	$R_{th2\,p}$	19						K/W
– housing to ambient (external metal flange)	$R_{th2\,m}$	1,8						K/W
Thermal time constant:								
– winding	τ_{w1}	12						s
– housing (external plastic flange)	$\tau_{w2\,p}$	500						s
– housing (external metal flange)	$\tau_{w2\,m}$	46						s
Operating temperature range:								
– motor		-30 ... +85 (optional version -30 ... +125)						°C
– winding, max. permissible		+125						°C
Shaft bearings		sintered bearings			ball bearings, preloaded			
Shaft diameter		2			2			mm
Radial shaft load max.:								
– dynamic at 3 000 min⁻¹ (3 mm from bearing)		1,5			8			N
Axial shaft load max.:								
– dynamic at 3 000 min⁻¹		0,2			0,8			N
– static (shaft unsupported)		20			10			N
Shaft play, max.:								
– radial		0,03			0,015			mm
– axial		0,2			0			mm
Speed up to	$n_{max.}$	8 000						min⁻¹
Number of pole pairs		1						
Mass		62						g
Housing material		steel, nickel plated						
Magnet material		NdFeB						

Rated values for continuous operation								
Rated torque	M_N	10	10	10	10	10	10	mNm
Rated current (thermal limit)	I_N	1,36	0,958	0,694	0,553	0,462	0,347	A
Rated speed	n_N	5 920	5 710	5 430	5 320	5 470	5 420	min⁻¹

Note: Rated values are calculated with nominal voltage and at a 22°C ambient temperature. The $R_{th2\,p}$ value has been reduced by 0%.

Note:

The diagram indicates the recommended speed in relation to the available torque at the output shaft for a given ambient temperature of 22°C.

The diagram shows the motor in different conditions of thermal coupling, i.e. mounted respectively on a plastic flange and a metal flange.

The nominal voltage (U_N) curve shows, up to the thermal limit, the operating point at nominal voltage for the motor mounted on a plastic flange. Higher torque can be achieved by further reducing the thermal resistance.

Any points of operation above the curve at nominal voltage will require a higher operating voltage. Any points below the nominal voltage curve will require less voltage.

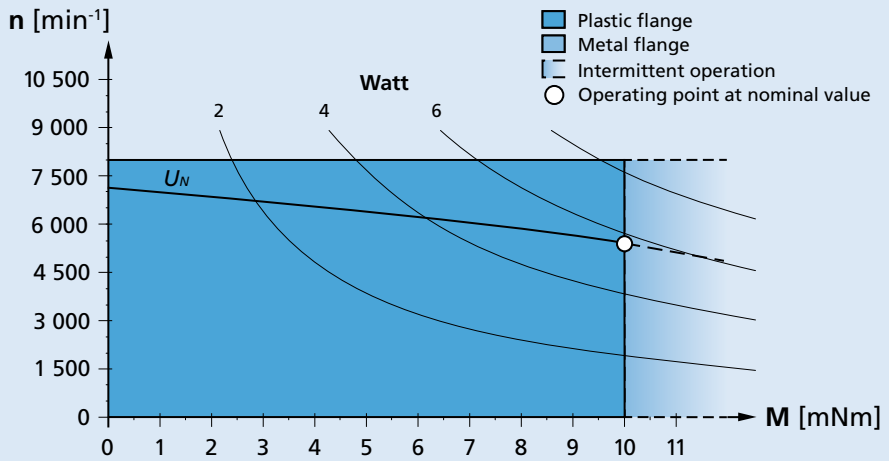

Recommended operation areas (example: nominal voltage 24V)

For notes on technical data and lifetime performance refer to "Technical Information".

Backwards

© DR. FRITZ FAULHABER GMBH & CO. KG
Specifications subject to change without notice.

Dimensional drawing

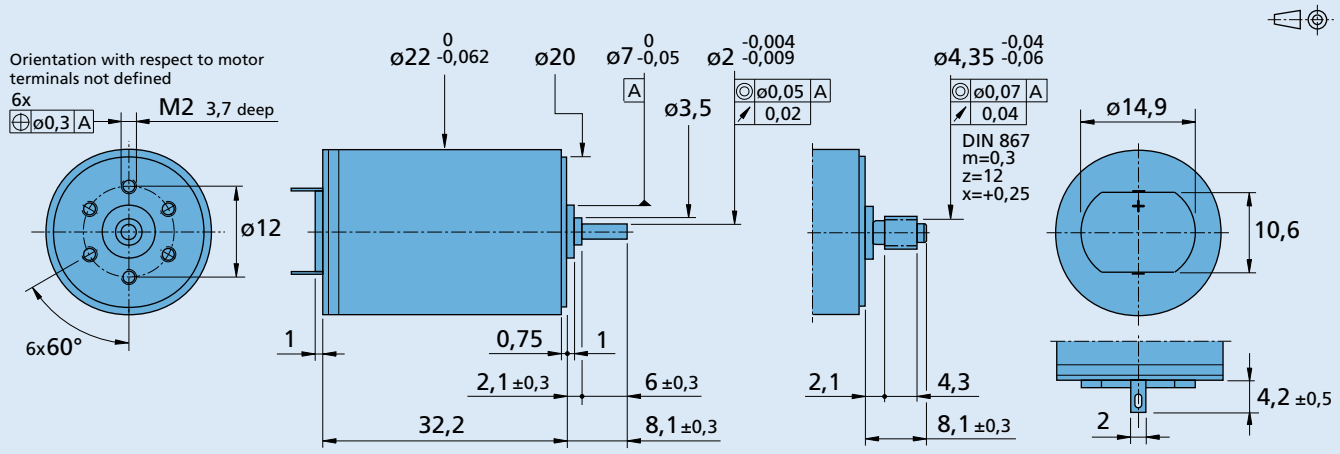

Options

Example product designation: **2232U012SR-277**

Option	Type	Description
L	Twin Leads	For motors with twin leads (PVC), length 150 mm, red (+) / black (-)
4924	Twin Leads	For motors with twin leads (PVC), length 300 mm, red (+) / black (-)
X4924	Twin Leads	For motors with twin leads (PVC), length 600 mm, red (+) / black (-)
4925	Twin Leads	For motors with twin leads (PVC), length 150 mm, red (+) / black (-), with connector AMP 179228-2
X4925	Twin Leads	For motors with twin leads (PVC), length 300 mm, red (+) / black (-), with connector AMP 179228-2
Y4925	Twin Leads	For motors with twin leads (PVC), length 600 mm, red (+) / black (-), with connector AMP 179228-2
F	Single Leads	For motors with single leads (PTFE), length 150 mm, red (+) / black (-)
277	Bearings	2 preloaded ball bearings

Product combination

Precision Gearheads / Lead Screws	Encoders	Drive Electronics	Cables / Accessories
20/1R 22E 22EKV 22GPT 22/2 22/5 22/7 23/1 26A	IE2-1024 IEH2-4096 IEH3-4096 IEH3-4096L	SC 1801 P SC 1801 S SC 2402 P SC 2804 S MC 3001 B MC 3001 P MC 3603 S MC 5004 P	To view our large range of accessory parts, please refer to the “Accessories” chapter.

© DR. FRITZ FAULHABER GMBH & CO. KG
Specifications subject to change without notice.

FAULHABER CXR

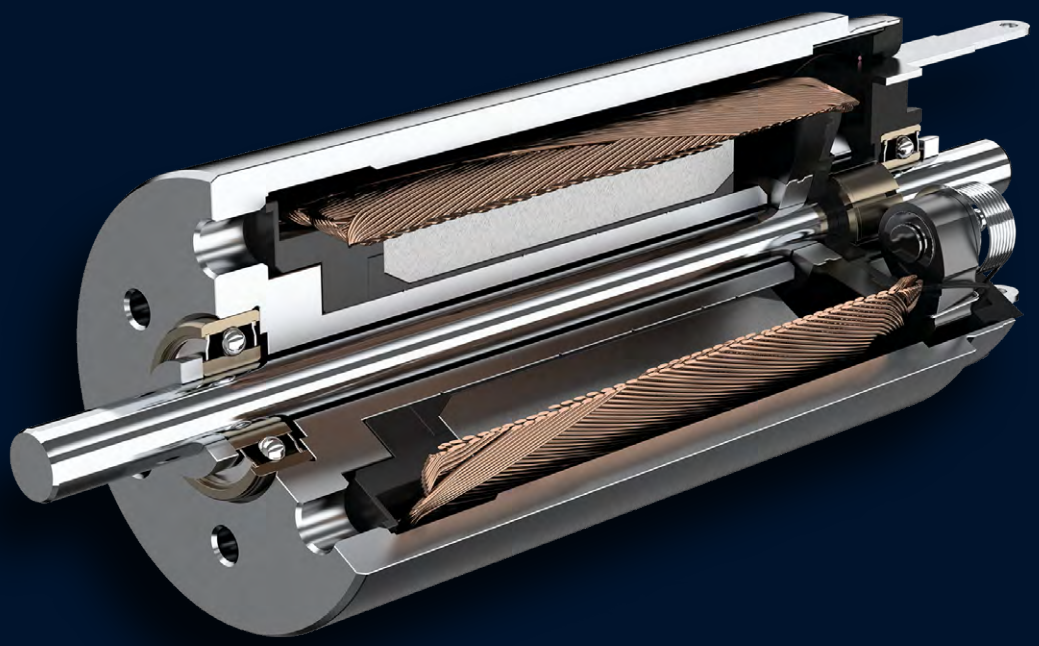

FAULHABER CXR

1336...CXR	Graphite Commutation	3.6 mNm
1727...CXR	Graphite Commutation	4.9 mNm
1741...CXR	Graphite Commutation	8.8 mNm
2237...CXR	Graphite Commutation	12 mNm
2642...CXR	Graphite Commutation	26 mNm
2657...CXR	Graphite Commutation	40 mNm

Backwards

DC-Micromotors 3,6 mNm

Graphite Commutation 4 W

Series 1336 ... CXR

Values at 22°C and nominal voltage		1336 U	006 CXR	012 CXR	018 CXR	024 CXR	
1 Nominal voltage	U_N		6	12	18	24	V
2 Terminal resistance	R		3,98	15,6	36,6	63,7	Ω
3 Efficiency, max.	$\eta_{max.}$		58	62	64	64	%
4 No-load speed	n_0		8 300	8 700	8 800	8 900	min^{-1}
5 No-load current, typ. (with shaft ø 2 mm)	I_0		0,058	0,029	0,019	0,014	A
6 Stall torque	M_H		8,1	8,6	8,6	8,6	mNm
7 Friction torque	M_R		0,35	0,35	0,35	0,35	mNm
8 Speed constant	k_n		1 568	783	525	392	min^{-1}/V
9 Back-EMF constant	k_E		0,638	1,277	1,904	2,552	mV/min^{-1}
10 Torque constant	k_M		6,09	12,19	18,18	24,37	mNm/A
11 Current constant	k_I		0,164	0,082	0,055	0,041	A/mNm
12 Slope of n-M curve	$\Delta n/\Delta M$		1 025	1 003	1 057	1 024	min^{-1}/mNm
13 Rotor inductance	L		70	280	656	1 100	µH
14 Mechanical time constant	τ_m		5,9	6	6,1	6	ms
15 Rotor inertia	J		0,55	0,57	0,55	0,56	gcm^2
16 Angular acceleration	$\alpha_{max.}$		147	152	156	154	$\cdot 10^3 rad/s^2$
17 Thermal resistance	R_{th1} / R_{th2}	13 / 28					K/W
18 Thermal time constant	τ_{w1} / τ_{w2}	11 / 245					s
19 Operating temperature range:							
– motor		-30 ... +100					°C
– winding, max. permissible		+125					°C
20 Shaft bearings		ball bearings, preloaded		sintered bearings			
21 Shaft load max.:		(standard)		(optional version)			
– with shaft diameter		2		2			mm
– radial at 3 000 min^{-1} (3 mm from bearing)		8		1,5			N
– axial at 3 000 min^{-1}		0,8		0,2			N
– axial at standstill		10		20			N
22 Shaft play:							
– radial	≤	0,015		0,03			mm
– axial	≤	0		0,2			mm
23 Housing material		steel, nickel plated					
24 Mass		21					g
25 Direction of rotation		clockwise, viewed from the front face					
26 Speed up to	$n_{max.}$	10 000					min^{-1}
27 Number of pole pairs		1					
28 Magnet material		NdFeB					
Rated values for continuous operation							
29 Rated torque	M_N		3,5	3,6	3,5	3,6	mNm
30 Rated current (thermal limit)	I_N		0,7	0,36	0,24	0,18	A
31 Rated speed	n_N		2 780	3 170	3 160	3 250	min^{-1}

Note: Rated values are calculated with nominal voltage and at a 22°C ambient temperature. The R_{th2} value has been reduced by 25%.

Note:

The diagram indicates the recommended speed in relation to the available torque at the output shaft for a given ambient temperature of 22°C.

The diagram shows the motor in a completely insulated as well as thermally coupled condition (R_{th2} 50% reduced).

The nominal voltage (U_N) curve shows the operating point at nominal voltage in the insulated and thermally coupled condition. Any points of operation above the curve at nominal voltage will require a higher operating voltage. Any points below the nominal voltage curve will require less voltage.

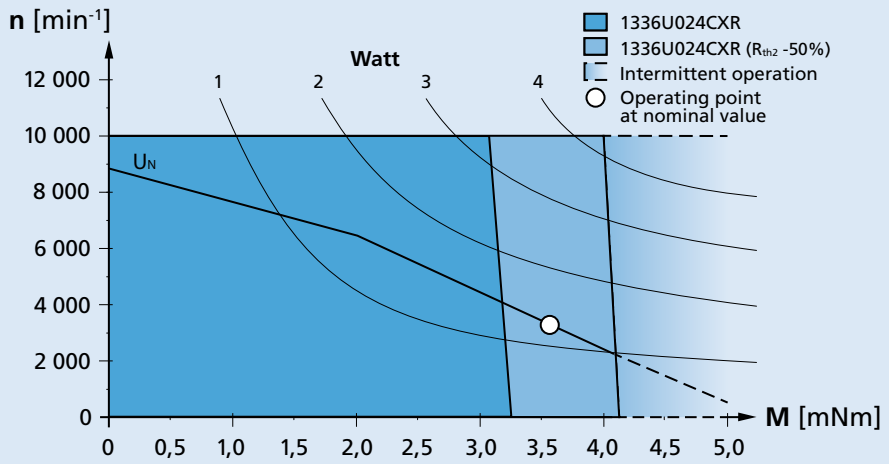

Recommended operation areas (example: nominal voltage 24V)

© DR. FRITZ FAULHABER GMBH & CO. KG
Specifications subject to change without notice.

Dimensional drawing

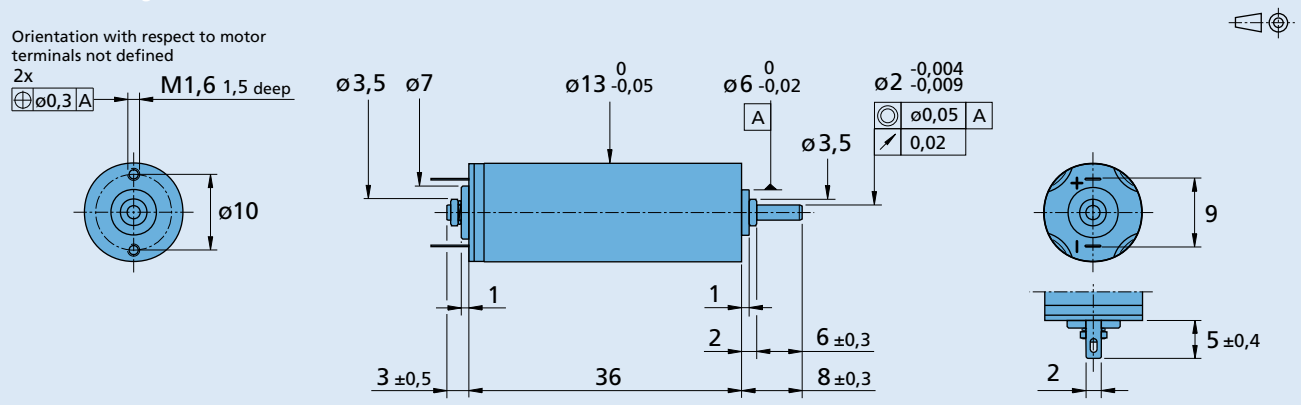

1336 U ... CXR

Options

Example product designation: **1336U012CXR-217**

Option	Type	Description
L	Twin Leads	For motors with twin leads (PVC), length 150 mm, red (+) / black (-)
4924	Twin Leads	For motors with twin leads (PVC), length 300 mm, red (+) / black (-)
X4924	Twin Leads	For motors with twin leads (PVC), length 600 mm, red (+) / black (-)
4925	Twin Leads	For motors with twin leads (PVC), length 150 mm, red (+) / black (-), with connector AMP 179228-2
X4925	Twin Leads	For motors with twin leads (PVC), length 300 mm, red (+) / black (-), with connector AMP 179228-2
Y4925	Twin Leads	For motors with twin leads (PVC), length 600 mm, red (+) / black (-), with connector AMP 179228-2
F	Single Leads	For motors with single leads (PTFE), length 150 mm, red (+) / black (-)
123	Encoder combination	Motor with rear end shaft for combination with Encoder IE2, IEH2 and IEH3
217	Bearings	Motor with sintered bearings

Product combination

Precision Gearheads / Lead Screws	Encoders	Drive Electronics	Cables / Accessories
14/1	IE2-1024 IEH2-4096 IEH3-4096 IEH3-4096L	SC 1801 P SC 1801 S MC 3001 B MC 3001 P MC 3603 S MC 5004 P	To view our large range of accessory parts, please refer to the “Accessories” chapter.

© DR. FRITZ FAULHABER GMBH & CO. KG
Specifications subject to change without notice.

DC-Micromotors

Graphite Commutation

4,9 mNm

5,3 W

Series 1727 ... CXR

Values at 22°C and nominal voltage		1727 U	006 CXR	012 CXR	024 CXR	
1 Nominal voltage	U_N		6	12	24	V
2 Terminal resistance	R		3,06	13,78	57,6	Ω
3 Efficiency, max.	$\eta_{max.}$		63	65	66	%
4 No-load speed	n_0		7 300	7 600	7 600	min^{-1}
5 No-load current, typ. (with shaft ø 2 mm)	I_0		0,052	0,026	0,013	A
6 Stall torque	M_H		12,2	11,4	11,4	mNm
7 Friction torque	M_R		0,36	0,36	0,36	mNm
8 Speed constant	k_n		1 362	681	332	min^{-1}/V
9 Back-EMF constant	k_E		0,734	1,47	3,01	mV/min^{-1}
10 Torque constant	k_M		7,01	14,03	28,73	mNm/A
11 Current constant	k_I		0,143	0,071	0,035	A/mNm
12 Slope of n-M curve	$\Delta n/\Delta M$		595	668	666	min^{-1}/mNm
13 Rotor inductance	L		80	320	1 440	µH
14 Mechanical time constant	τ_m		8,1	8,4	8,4	ms
15 Rotor inertia	J		1,3	1,2	1,2	gcm^2
16 Angular acceleration	$\alpha_{max.}$		94	95	95	$\cdot 10^3 rad/s^2$
17 Thermal resistance	R_{th1} / R_{th2}	9,1 / 28,3				K/W
18 Thermal time constant	τ_{w1} / τ_{w2}	7 / 340				s
19 Operating temperature range:						
– motor		-30 ... +100				°C
– winding, max. permissible		+125				°C
20 Shaft bearings		ball bearings, preloaded	sintered bearings			
21 Shaft load max.:		(standard)	(optional version)			
– with shaft diameter		2	2			mm
– radial at 3 000 min^{-1} (3 mm from bearing)		8	1,5			N
– axial at 3 000 min^{-1}		0,8	0,2			N
– axial at standstill		10	20			N
22 Shaft play:						
– radial	≤	0,015	0,03			mm
– axial	≤	0	0,2			mm
23 Housing material		steel, nickel plated				
24 Mass		28				g
25 Direction of rotation		clockwise, viewed from the front face				
26 Speed up to	$n_{max.}$	9 000				min^{-1}
27 Number of pole pairs		1				
28 Magnet material		NdFeB				

Rated values for continuous operation						
29 Rated torque	M_N		4,9	4,7	4,7	mNm
30 Rated current (thermal limit)	I_N		0,84	0,41	0,2	A
31 Rated speed	n_N		2 910	2 810	2 730	min^{-1}

Note: Rated values are calculated with nominal voltage and at a 22°C ambient temperature. The R_{th2} value has been reduced by 25%.

Note:

The diagram indicates the recommended speed in relation to the available torque at the output shaft for a given ambient temperature of 22°C.

The diagram shows the motor in a completely insulated as well as thermally coupled condition (R_{th2} 50% reduced).

The nominal voltage (U_N) curve shows the operating point at nominal voltage in the insulated and thermally coupled condition. Any points of operation above the curve at nominal voltage will require a higher operating voltage. Any points below the nominal voltage curve will require less voltage.

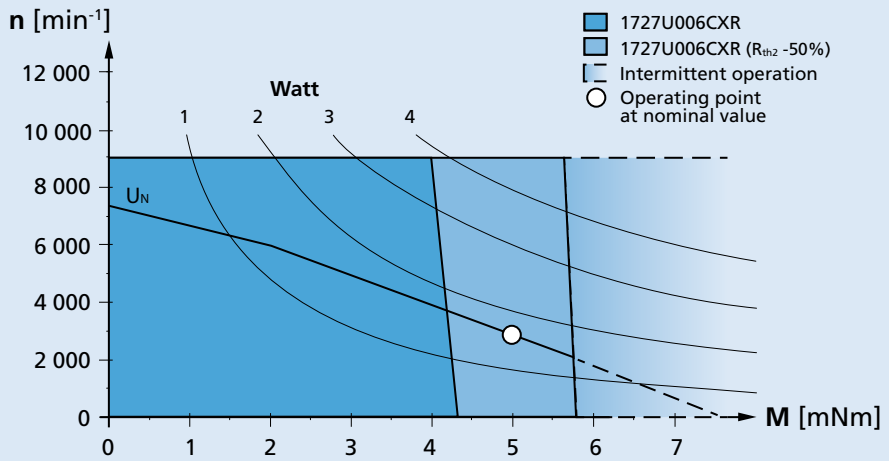

Recommended operation areas (example: nominal voltage 6V)

For notes on technical data and lifetime performance refer to "Technical Information".

Backwards

© DR. FRITZ FAULHABER GMBH & CO. KG
Specifications subject to change without notice.

Dimensional drawing

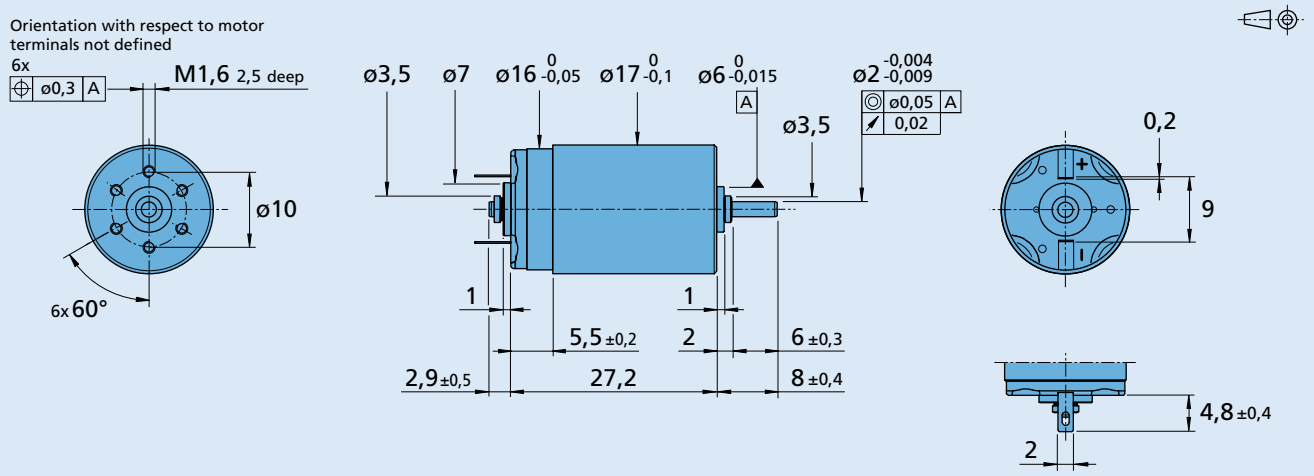

1727 U ... CXR

Options

Example product designation: **1727U012CXR-217**

Option	Type	Description
L	Twin Leads	For motors with twin leads (PVC), length 150 mm, red (+) / black (-)
4924	Twin Leads	For motors with twin leads (PVC), length 300 mm, red (+) / black (-)
X4924	Twin Leads	For motors with twin leads (PVC), length 600 mm, red (+) / black (-)
4925	Twin Leads	For motors with twin leads (PVC), length 150 mm, red (+) / black (-), with connector AMP 179228-2
X4925	Twin Leads	For motors with twin leads (PVC), length 300 mm, red (+) / black (-), with connector AMP 179228-2
Y4925	Twin Leads	For motors with twin leads (PVC), length 600 mm, red (+) / black (-), with connector AMP 179228-2
F	Single Leads	For motors with single leads (PTFE), length 150 mm, red (+) / black (-)
123	Encoder combination	Second shaft end for combination with encoder IE2, IEH2 and IEH3
217	Bearings	Motor with sintered bearings

Product combination

Precision Gearheads / Lead Screws	Encoders	Drive Electronics	Cables / Accessories
15/10 16/7 17/1	IE2-1024 IEH2-4096 IEH3-4096 IEH3-4096L	SC 1801 P SC 1801 S MC 3001 B MC 3001 P MC 3603 S MC 5004 P	To view our large range of accessory parts, please refer to the “Accessories” chapter.

© DR. FRITZ FAULHABER GMBH & CO. KG
Specifications subject to change without notice.

DC-Micromotors

Graphite Commutation

8,8 mNm

9 W

Series 1741 ... CXR

Values at 22°C and nominal voltage		1741 U		006 CXR	012 CXR	018 CXR	024 CXR	
1	Nominal voltage	U_N		6	12	18	24	V
2	Terminal resistance	R		1,3	5,8	15	26,9	Ω
3	Efficiency, max.	$\eta_{max.}$		72	74	75	75	%
4	No-load speed	n_0		7 100	7 600	7 300	7 300	min^{-1}
5	No-load current, typ. (with shaft ø 2 mm)	I_0		0,055	0,028	0,017	0,013	A
6	Stall torque	M_H		30,6	27,9	26,1	26,2	mNm
7	Friction torque	M_R		0,4	0,4	0,4	0,4	mNm
8	Speed constant	k_n		1 303	668	420	314	min^{-1}/V
9	Back-EMF constant	k_E		0,768	1,496	2,378	3,185	mV/min^{-1}
10	Torque constant	k_M		7,33	14,29	22,71	30,41	mNm/A
11	Current constant	k_I		0,136	0,07	0,044	0,033	A/mNm
12	Slope of n-M curve	$\Delta n/\Delta M$		231	271	278	278	min^{-1}/mNm
13	Rotor inductance	L		35	135	340	600	µH
14	Mechanical time constant	τ_m		4,3	4,5	4,4	4,4	ms
15	Rotor inertia	J		1,8	1,6	1,5	1,5	gcm^2
16	Angular acceleration	$\alpha_{max.}$		170	175	174	174	$\cdot 10^3 rad/s^2$
17	Thermal resistance	R_{th1} / R_{th2}	7 / 23					K/W
18	Thermal time constant	τ_{w1} / τ_{w2}	8 / 440					s
19	Operating temperature range:							
	– motor		-30 ... +100					°C
	– winding, max. permissible		+125					°C
20	Shaft bearings		ball bearings, preloaded		sintered bearings			
21	Shaft load max.:		(standard)		(optional version)			
	– with shaft diameter		2		2			mm
	– radial at 3 000 min^{-1} (3 mm from bearing)		8		1,5			N
	– axial at 3 000 min^{-1}		0,8		0,2			N
	– axial at standstill		10		20			N
22	Shaft play:							
	– radial	≤	0,015		0,03			mm
	– axial	≤	0		0,2			mm
23	Housing material		steel, zinc galvanized and passivated					
24	Mass		45					g
25	Direction of rotation		clockwise, viewed from the front face					
26	Speed up to	$n_{max.}$	9 000					min^{-1}
27	Number of pole pairs		1					
28	Magnet material		NdFeB					

Rated values for continuous operation								
29	Rated torque	M_N		8,8	8,4	8,4	8,4	mNm
30	Rated current (thermal limit)	I_N		1,4	0,69	0,43	0,33	A
31	Rated speed	n_N		4 280	4 410	3 940	3 940	min^{-1}

Note: Rated values are calculated with nominal voltage and at a 22°C ambient temperature. The R_{th2} value has been reduced by 25%.

Note:

The diagram indicates the recommended speed in relation to the available torque at the output shaft for a given ambient temperature of 22°C.

The diagram shows the motor in a completely insulated as well as thermally coupled condition (R_{th2} 50% reduced).

The nominal voltage (U_N) curve shows the operating point at nominal voltage in the insulated and thermally coupled condition. Any points of operation above the curve at nominal voltage will require a higher operating voltage. Any points below the nominal voltage curve will require less voltage.

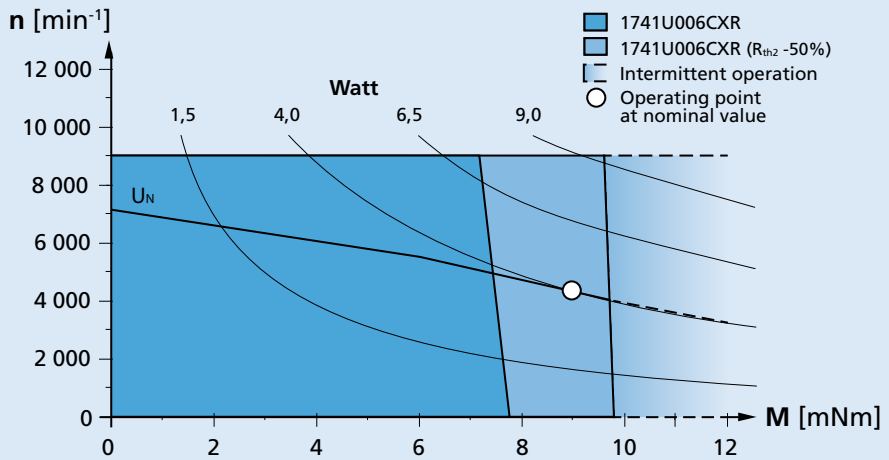

Recommended operation areas (example: nominal voltage 6V)

For notes on technical data and lifetime performance refer to "Technical Information".

Backwards

© DR. FRITZ FAULHABER GMBH & CO. KG
Specifications subject to change without notice.

Dimensional drawing

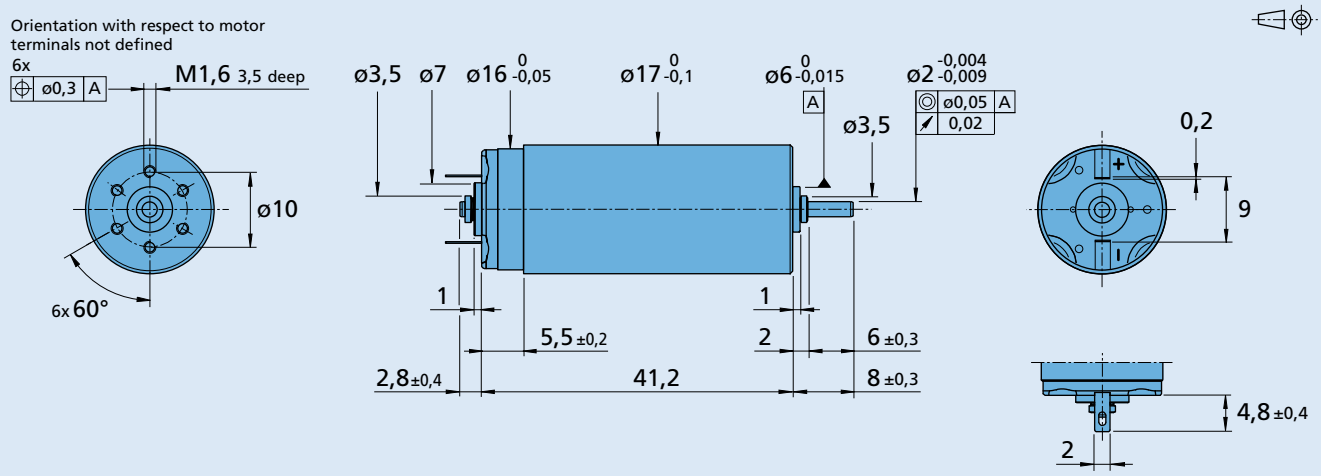

1741 U ... CXR

Options

Example product designation: **1741U012CXR-217**

Option	Type	Description
L	Twin Leads	For motors with twin leads (PVC), length 150 mm, red (+) / black (-)
4924	Twin Leads	For motors with twin leads (PVC), length 300 mm, red (+) / black (-)
X4924	Twin Leads	For motors with twin leads (PVC), length 600 mm, red (+) / black (-)
4925	Twin Leads	For motors with twin leads (PVC), length 150 mm, red (+) / black (-), with connector AMP 179228-2
X4925	Twin Leads	For motors with twin leads (PVC), length 300 mm, red (+) / black (-), with connector AMP 179228-2
Y4925	Twin Leads	For motors with twin leads (PVC), length 600 mm, red (+) / black (-), with connector AMP 179228-2
F	Single Leads	For motors with single leads (PTFE), length 150 mm, red (+) / black (-)
123	Encoder combination	Motor with rear end shaft for combination with Encoder IE2, IEH2 and IEH3
217	Bearings	Motor with sintered bearings

Product combination

Precision Gearheads / Lead Screws	Encoders	Drive Electronics	Cables / Accessories
15/10 16/7 17/1 20/1R	IE2-1024 IEH2-4096 IEH3-4096 IEH3-4096L	SC 1801 P SC 1801 S SC 2402 P SC 2804 S MC 3001 B MC 3001 P MC 3603 S MC 5004 P	To view our large range of accessory parts, please refer to the “Accessories” chapter.

© DR. FRITZ FAULHABER GMBH & CO. KG
Specifications subject to change without notice.

DC-Micromotors 12 mNm

Graphite Commutation 11 W

Series 2237 ... CXR

Values at 22°C and nominal voltage		2237 S	006 CXR	012 CXR	018 CXR	024 CXR	036 CXR	048 CXR	
1	Nominal voltage	U_N	6	12	18	24	36	48	V
2	Terminal resistance	R	0,85	3,92	8,5	15,7	33	62,8	Ω
3	Efficiency, max.	$\eta_{max.}$	68,1	70,8	72,2	72,6	73,6	73,5	%
4	No-load speed	n_0	6 900	6 800	7 000	6 900	7 200	7 000	min^{-1}
5	No-load current, typ. (with shaft ø 3 mm)	I_0	0,124	0,058	0,039	0,029	0,02	0,015	A
6	Stall torque	M_H	47,2	45,7	47,1	46,6	48,7	47,1	mNm
7	Friction torque	M_R	0,92	0,92	0,92	0,92	0,92	0,92	mNm
8	Speed constant	k_n	1 283	601	409	301	207	150	min^{-1}/V
9	Back-EMF constant	k_E	0,78	1,66	2,44	3,33	4,83	6,65	mV/min^{-1}
10	Torque constant	k_M	7,44	15,9	23,3	31,8	46,2	63,5	mNm/A
11	Current constant	k_I	0,134	0,063	0,043	0,032	0,022	0,016	A/mNm
12	Slope of n-M curve	$\Delta n/\Delta M$	146	148	149	149	148	149	min^{-1}/mNm
13	Rotor inductance	L	35	150	320	590	1 240	2 340	µH
14	Mechanical time constant	τ_m	5	5	5	5	5	5	ms
15	Rotor inertia	J	3,1	3,1	3,1	3,1	3,1	3,1	gcm^2
16	Angular acceleration	$\alpha_{max.}$	152	147	152	150	157	152	$\cdot 10^3 rad/s^2$
17	Thermal resistance	R_{th1} / R_{th2}	8 / 17						K/W
18	Thermal time constant	τ_{w1} / τ_{w2}	13 / 500						s
19	Operating temperature range:								
	– motor		-30 ... +100						°C
	– winding, max. permissible		+125						°C
20	Shaft bearings		sintered bearings			ball bearings, preloaded			
21	Shaft load max.:		(standard)			(optional version)			
	– with shaft diameter		3			3			mm
	– radial at 3 000 min^{-1} (3 mm from bearing)		2,5			15			N
	– axial at 3 000 min^{-1}		0,3			2			N
	– axial at standstill		20			20			N
22	Shaft play:								
	– radial	≤	0,03			0,015			mm
	– axial	≤	0,15			0			mm
23	Housing material		steel, zinc galvanized and passivated						
24	Mass		68						g
25	Direction of rotation		clockwise, viewed from the front face						
26	Speed up to	$n_{max.}$	8 000						min^{-1}
27	Number of pole pairs		1						
28	Magnet material		NdFeB						
Rated values for continuous operation									
29	Rated torque	M_N	11	12	12	12	12	12	mNm
30	Rated current (thermal limit)	I_N	1,9	0,9	0,61	0,46	0,31	0,23	A
31	Rated speed	n_N	4 750	4 450	4 700	4 560	4 880	4 630	min^{-1}

Note: Rated values are calculated with nominal voltage and at a 22°C ambient temperature. The R_{th2} value has been reduced by 25%.

Note:

The diagram indicates the recommended speed in relation to the available torque at the output shaft for a given ambient temperature of 22°C.

The diagram shows the motor in a completely insulated as well as thermally coupled condition (R_{th2} 50% reduced).

The nominal voltage (U_N) curve shows the operating point at nominal voltage in the insulated and thermally coupled condition. Any points of operation above the curve at nominal voltage will require a higher operating voltage. Any points below the nominal voltage curve will require less voltage.

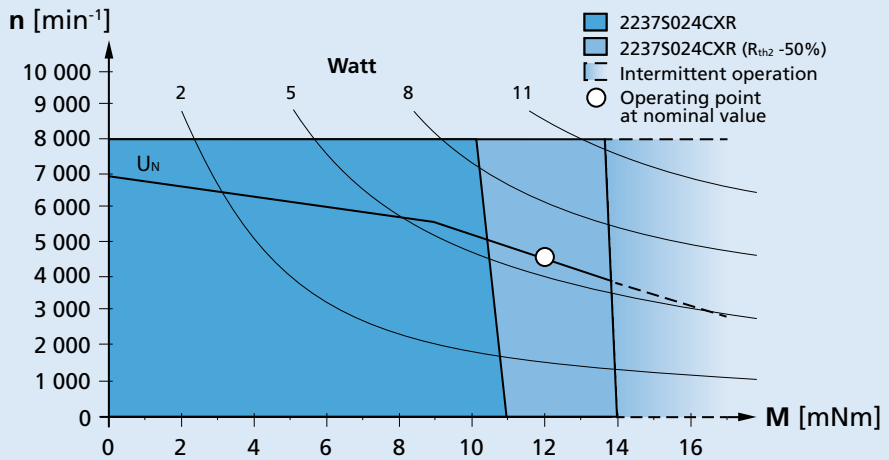

Recommended operation areas (example: nominal voltage 24V)

For notes on technical data and lifetime performance refer to "Technical Information".

Backwards

© DR. FRITZ FAULHABER GMBH & CO. KG
Specifications subject to change without notice.

Dimensional drawing

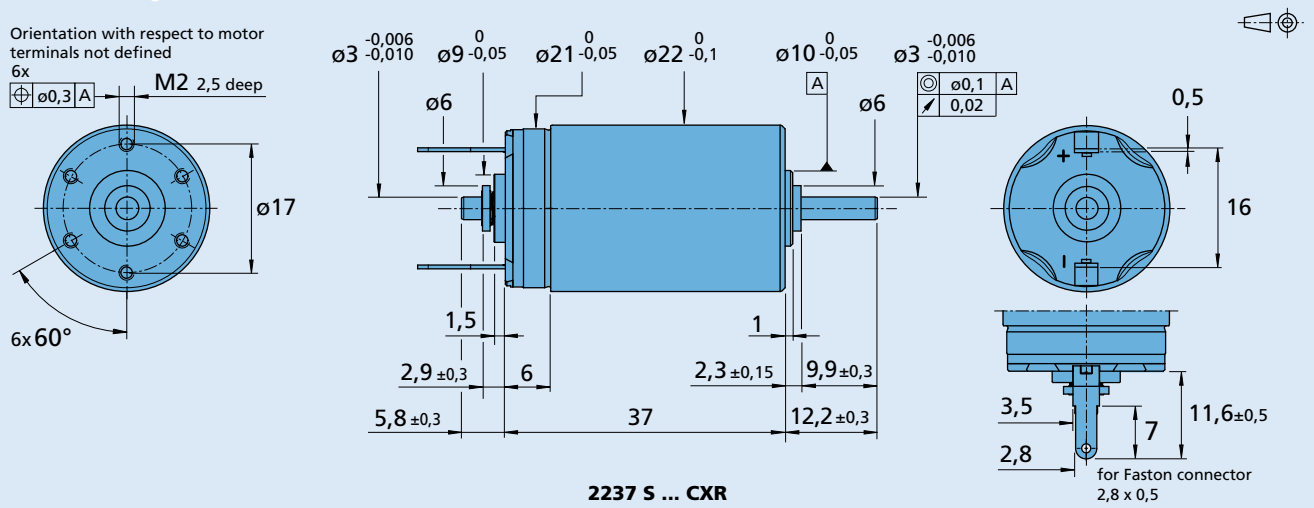

2237 S ... CXR

Options

Example product designation: **2237S012CXR-275**

Option	Type	Description
U	Single Leads	For motors with single leads (PTFE), length 160 mm, red (+) / black (-)
158	Shaft end	No second shaft end
275	Ball bearings	Motor with 2 preloaded ball bearings.

Product combination

Precision Gearheads / Lead Screws	Encoders	Drive Electronics	Cables / Accessories
22E 22EKV 22GPT 22/7 23/1 26A 22L ... ML 22L ... SB 22L ... PB	IE3-1024 IE3-1024 L IERS3-500 IERS3-500 L IER3-10000 IER3-10000 L	SC 1801 P SC 1801 S SC 2402 P SC 2804 S SC 5004 P SC 5008 S MC 3001 B MC 3001 P MC 3603 S MC 5004 P MC 5005 S	To view our large range of accessory parts, please refer to the "Accessories" chapter.

© DR. FRITZ FAULHABER GMBH & CO. KG
Specifications subject to change without notice.

DC-Micromotors

26 mNm

Graphite Commutation

21 W

Series 2642 ... CXR

Values at 22°C and nominal voltage		2642 W	012 CXR	015 CXR	018 CXR	024 CXR	036 CXR	048 CXR	
1	Nominal voltage	U_N	12	15	18	24	36	48	V
2	Terminal resistance	R	1,46	2,17	3,29	5,84	13,78	24,06	Ω
3	Efficiency, max.	$\eta_{max.}$	76	81	80	78	80	79	%
4	No-load speed	n_0	5 800	5 600	5 800	5 900	5 800	5 900	min^{-1}
5	No-load current, typ. (with shaft ø 4 mm)	I_0	0,092	0,07	0,06	0,045	0,03	0,022	A
6	Stall torque	M_H	144,6	165,3	153,2	150,5	148	149	mNm
7	Friction torque	M_R	1,7	1,7	1,7	1,7	1,7	1,7	mNm
8	Speed constant	k_n	514	395	337	252	167	125	min^{-1}/V
9	Back-EMF constant	k_E	1,945	2,53	2,965	3,962	6,001	7,994	mV/min^{-1}
10	Torque constant	k_M	18,57	24,16	28,31	37,83	57,31	76,34	mNm/A
11	Current constant	k_I	0,054	0,041	0,035	0,026	0,017	0,013	A/mNm
12	Slope of n-M curve	$\Delta n/\Delta M$	40,4	35,5	39,2	39	40,1	39,4	min^{-1}/mNm
13	Rotor inductance	L	135	232	313	560	1 283	2 280	µH
14	Mechanical time constant	τ_m	5,1	4,5	4,9	4,9	5	5	ms
15	Rotor inertia	J	12	12	12	12	12	12	gcm^2
16	Angular acceleration	$\alpha_{max.}$	121	138	128	125	123	124	$\cdot 10^3 rad/s^2$
17	Thermal resistance	R_{th1} / R_{th2}	4,7 / 15,2						K/W
18	Thermal time constant	τ_{w1} / τ_{w2}	20 / 720						s
19	Operating temperature range:								
	– motor		-30 ... +100						°C
	– winding, max. permissible		+125						°C
20	Shaft bearings		sintered bearings			ball bearings, preloaded			
21	Shaft load max.:		(standard)			(optional version)			
	– with shaft diameter		4			4			mm
	– radial at 3 000 min^{-1} (3 mm from bearing)		10			20			N
	– axial at 3 000 min^{-1}		2			2			N
	– axial at standstill		50			20			N
22	Shaft play:								
	– radial	≤	0,03			0,015			mm
	– axial	≤	0,15			0			mm
23	Housing material		steel, zinc galvanized and passivated						
24	Mass		114						g
25	Direction of rotation		clockwise, viewed from the front face						
26	Speed up to	$n_{max.}$	7 000						min^{-1}
27	Number of pole pairs		1						
28	Magnet material		NdFeB						

Rated values for continuous operation									
29	Rated torque	M_N	25	26	26	26	26	26	mNm
30	Rated current (thermal limit)	I_N	1,6	1,32	1,08	0,82	0,54	0,41	A
31	Rated speed	n_N	4 770	4 660	4 750	4 770	4 710	4 750	min^{-1}

Note: Rated values are calculated with nominal voltage and at a 22°C ambient temperature. The R_{th2} value has been reduced by 25%.

Note:

The diagram indicates the recommended speed in relation to the available torque at the output shaft for a given ambient temperature of 22°C.

The diagram shows the motor in a completely insulated as well as thermally coupled condition (R_{th2} 50% reduced).

The nominal voltage (U_N) curve shows the operating point at nominal voltage in the insulated and thermally coupled condition. Any points of operation above the curve at nominal voltage will require a higher operating voltage. Any points below the nominal voltage curve will require less voltage.

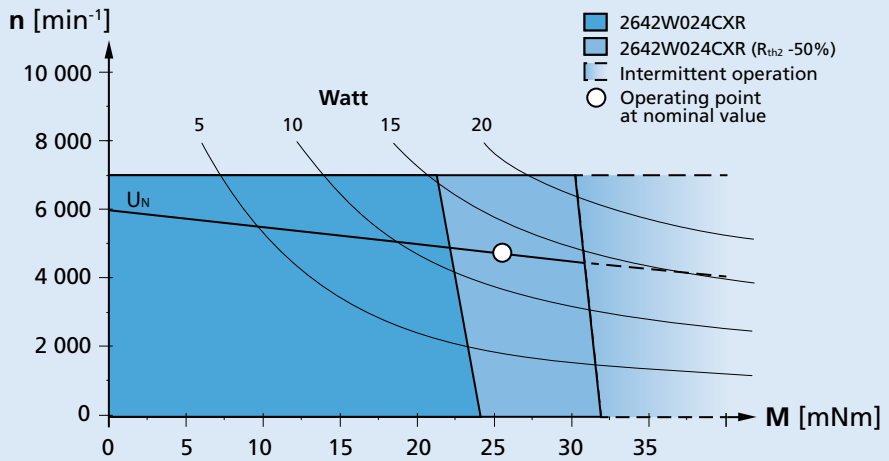

Recommended operation areas (example: nominal voltage 24V)

For notes on technical data and lifetime performance refer to "Technical Information".

Backwards

© DR. FRITZ FAULHABER GMBH & CO. KG
Specifications subject to change without notice.

Dimensional drawing

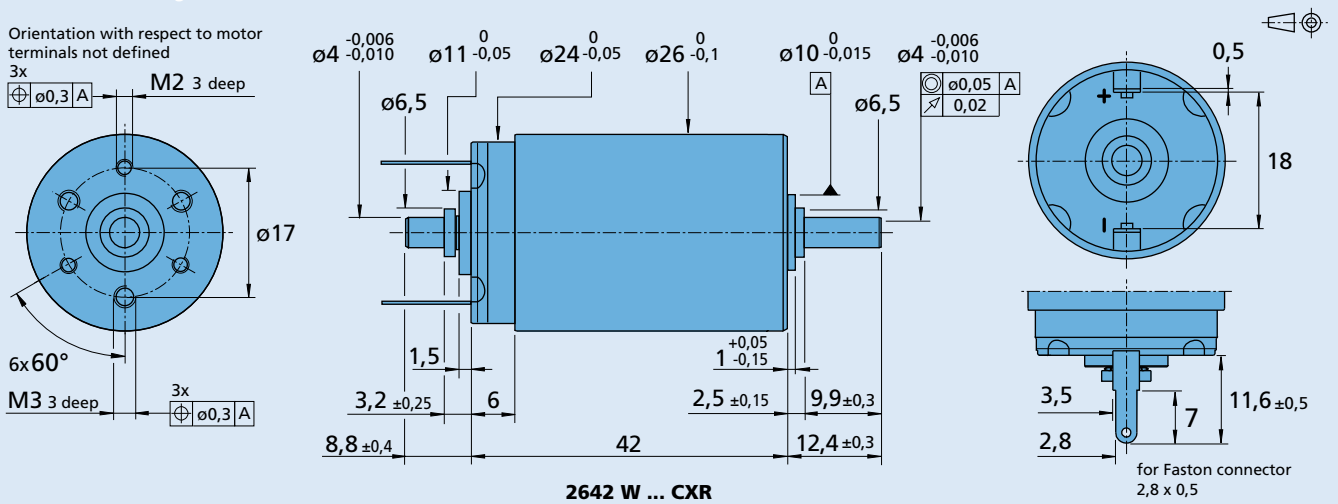

2642 W ... CXR

Options

Example product designation: **2642W012CXR-275**

Option	Type	Description
U	Single Leads	For motors with single leads (PTFE), length 160 mm, red (+) / black (-)
158	Shaft end	No second shaft end
275	Ball bearings	Motor with 2 preloaded ball bearings.

Product combination

Precision Gearheads / Lead Screws	Encoders	Drive Electronics	Cables / Accessories
22GPT	IE3-1024	SC 2402 P	MBZ
26A	IE3-1024 L	SC 2804 S	
26/1R	IERS3-500	SC 5004 P	To view our large range of accessory parts, please refer to the “Accessories” chapter.
30/1	IERS3-500 L	SC 5008 S	
30/1 S	IER3-10000	MC 3001 B	
32GPT	IER3-10000 L	MC 3001 P	
22L ... ML		MC 3603 S	
22L ... SB		MC 5004 P	
22L ... PB		MC 5005 S	
32L ... TL			
32L ... ML			
32L ... SB			
32L ... PB			

© DR. FRITZ FAULHABER GMBH & CO. KG
Specifications subject to change without notice.

DC-Micromotors

Graphite Commutation

40 mNm

34 W

Series 2657 ... CXR

Values at 22°C and nominal voltage		2657 W	012 CXR	018 CXR	024 CXR	030 CXR	036 CXR	048 CXR	
1	Nominal voltage	U_N	12	18	24	30	36	48	V
2	Terminal resistance	R	0,72	1,53	2,98	4,84	6,76	12,61	Ω
3	Efficiency, max.	$\eta_{max.}$	81	85	83	84	85	83	%
4	No-load speed	n_0	5 600	5 500	5 800	5 700	5 800	5 800	min^{-1}
5	No-load current, typ. (with shaft ø 4 mm)	I_0	0,104	0,067	0,052	0,041	0,035	0,026	A
6	Stall torque	M_H	306,7	347,3	302,9	300,7	306,9	283,1	mNm
7	Friction torque	M_R	2	2	2	2	2	2	mNm
8	Speed constant	k_n	494	321	247	196	165	122	min^{-1}/V
9	Back-EMF constant	k_E	2,024	3,113	4,05	5,11	6,07	8,205	mV/min^{-1}
10	Torque constant	k_M	19,33	29,73	38,67	48,84	58	78,35	mNm/A
11	Current constant	k_I	0,052	0,034	0,026	0,02	0,017	0,013	A/mNm
12	Slope of n-M curve	$\Delta n/\Delta M$	18,4	16,5	19	19,4	19,2	19,6	min^{-1}/mNm
13	Rotor inductance	L	90	214	365	579	816	1 500	µH
14	Mechanical time constant	τ_m	3,3	2,9	3,4	3,4	3,4	3,5	ms
15	Rotor inertia	J	17	17	17	17	17	17	gcm^2
16	Angular acceleration	$\alpha_{max.}$	180	204	178	177	180	172	$\cdot 10^3 rad/s^2$
17	Thermal resistance	R_{th1} / R_{th2}	4,4 / 12,6						K/W
18	Thermal time constant	τ_{w1} / τ_{w2}	28 / 810						s
19	Operating temperature range:								
	– motor		-30 ... +100						°C
	– winding, max. permissible		+125						°C
20	Shaft bearings		sintered bearings			ball bearings, preloaded			
21	Shaft load max.:		(standard)			(optional version)			
	– with shaft diameter		4			4			mm
	– radial at 3 000 min^{-1} (3 mm from bearing)		10			20			N
	– axial at 3 000 min^{-1}		2			2			N
	– axial at standstill		50			20			N
22	Shaft play:								
	– radial	≤	0,03			0,015			mm
	– axial	≤	0,15			0			mm
23	Housing material		steel, zinc galvanized and passivated						
24	Mass		156						g
25	Direction of rotation		clockwise, viewed from the front face						
26	Speed up to	$n_{max.}$	7 000						min^{-1}
27	Number of pole pairs		1						
28	Magnet material		NdFeB						
Rated values for continuous operation									
29	Rated torque	M_N	39	43	40	40	40	40	mNm
30	Rated current (thermal limit)	I_N	2,4	1,7	1,2	0,97	0,82	0,61	A
31	Rated speed	n_N	5 040	5 020	5 110	5 050	5 140	5 050	min^{-1}

Note: Rated values are calculated with nominal voltage and at a 22°C ambient temperature. The R_{th2} value has been reduced by 25%.

Note:

The diagram indicates the recommended speed in relation to the available torque at the output shaft for a given ambient temperature of 22°C.

The diagram shows the motor in a completely insulated as well as thermally coupled condition (R_{th2} 50% reduced).

The nominal voltage (U_N) curve shows the operating point at nominal voltage in the insulated and thermally coupled condition. Any points of operation above the curve at nominal voltage will require a higher operating voltage. Any points below the nominal voltage curve will require less voltage.

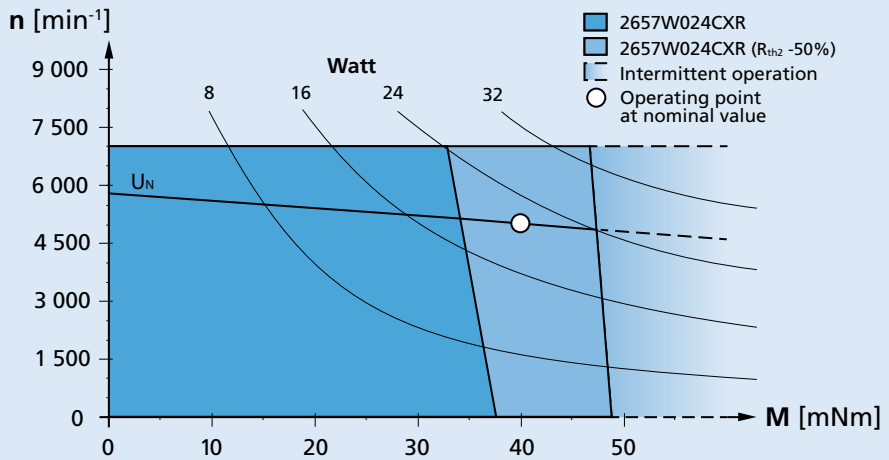

Recommended operation areas (example: nominal voltage 24V)

For notes on technical data and lifetime performance refer to "Technical Information".

Backwards

© DR. FRITZ FAULHABER GMBH & CO. KG
Specifications subject to change without notice.

Dimensional drawing

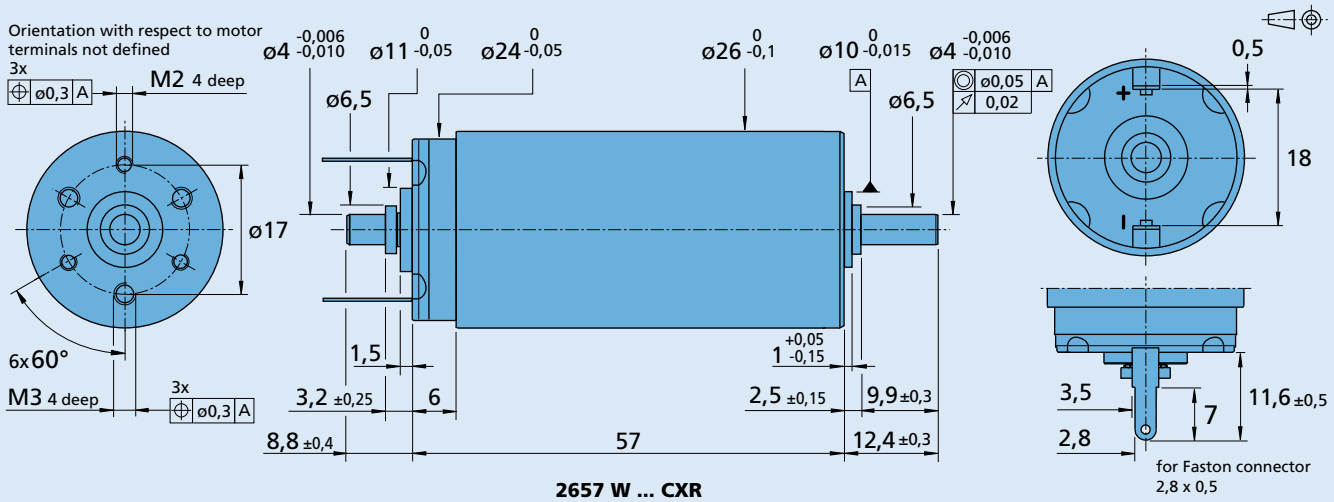

2657 W ... CXR

Options

Example product designation: **2657W012CXR-275**

Option	Type	Description
U	Single Leads	For motors with single leads (PTFE), length 160 mm, red (+) / black (-)
158	Shaft end	No second shaft end
275	Ball bearings	Motor with 2 preloaded ball bearings.

Product combination

Precision Gearheads / Lead Screws	Encoders	Drive Electronics	Cables / Accessories
22GPT	IE3-1024	SC 2402 P	MBZ
26A	IE3-1024 L	SC 2804 S	
26/1R	IERS3-500	SC 5004 P	To view our large range of accessory parts, please refer to the “Accessories” chapter.
30/1	IERS3-500 L	SC 5008 S	
30/1 S	IER3-10000	MC 3603 S	
32GPT	IER3-10000 L	MC 5004 P	
22L ... ML		MC 5005 S	
22L ... SB			
22L ... PB			
32L ... TL			
32L ... ML			
32L ... SB			
32L ... PB			

© DR. FRITZ FAULHABER GMBH & CO. KG
Specifications subject to change without notice.

FAULHABER CR

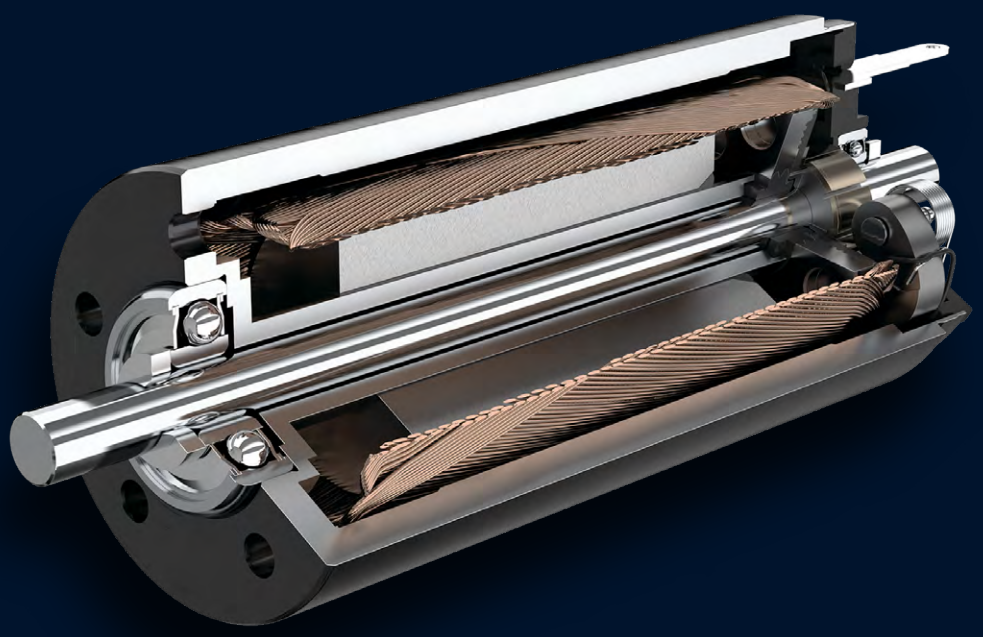

FAULHABER CR

2342...CR	Graphite Commutation	20,5 mNm
2642...CR	Graphite Commutation	32 mNm
2657...CR	Graphite Commutation	51,1 mNm
2668...CR	Graphite Commutation	70 mNm
3242...CR	Graphite Commutation	41 mNm
3257...CR	Graphite Commutation	73.1 mNm
3272...CR	Graphite Commutation	125 mNm
3863...CR	Graphite Commutation	137 mNm
3890...CR	Graphite Commutation	224 mNm

Backwards

DC-Micromotors

Graphite Commutation

20,5 mNm

21,7 W

Series 2342 ... CR

Values at 22°C and nominal voltage	2342 S	006 CR	012 CR	018 CR	024 CR	036 CR	048 CR	
Nominal voltage	U_N	6	12	18	24	36	48	V
Terminal resistance	R	0,362	1,93	4,14	7,14	15,9	31,2	Ω
Rotor inductance	L	13,1	69,1	142	264	569	1 130	µH
Efficiency, max.	$\eta_{max.}$	75	77	78	79	79	80	%
No-load current, typ.	I_0	0,157	0,0694	0,0479	0,0351	0,024	0,0163	A
No-load speed	n_0	8 310	7 530	7 990	7 870	8 110	7 690	min⁻¹
Stall torque	M_H	95,6	86,1	87,7	93,2	92,9	89	mNm
Rotor inertia	J	5,6	5,7	6,2	5,8	6,5	6	gcm²
Friction torque	M_R	0,98	1	0,99	0,99	0,99	0,95	mNm
Torque constant	k_M	6,36	14,6	21	28,6	42	59,1	mNm/A
Speed constant	k_n	1 500	653	455	334	228	162	min⁻¹/V
Slope of n-M curve	$\Delta n/\Delta M$	85,5	86,2	89,8	83,3	86,1	85,3	min⁻¹/mNm
Thermal resistance:								
– winding to housing	R_{th1}	5,6						K/W
– housing to ambient (external plastic flange)	$R_{th2\,p}$	15						K/W
– housing to ambient (external metal flange)	$R_{th2\,m}$	2,1						K/W
Thermal time constant:								
– winding	τ_{w1}	12						s
– housing (external plastic flange)	$\tau_{w2\,p}$	580						s
– housing (external metal flange)	$\tau_{w2\,m}$	78						s
Operating temperature range:								
– motor		-30 ... +100						°C
– winding, max. permissible		+125						°C
Shaft bearings		ball bearings, preloaded						
Shaft diameter		3						mm
Radial shaft load max.:								
– dynamic at 3 000 min⁻¹ (3 mm from bearing)		20						N
Axial shaft load max.:								
– dynamic at 3 000 min⁻¹		2						N
– static (shaft unsupported)		20						N
– static (shaft supported)		900						N
Shaft play, max.:								
– radial		0,015						mm
– axial		0						mm
Speed up to	$n_{max.}$	11 000						min⁻¹
Number of pole pairs		1						
Mass		88						g
Housing material		steel, nickel plated						
Magnet material		NdFeB						

Rated values for continuous operation								
Rated torque	M_N	16,6	19,8	19,6	20,5	20,2	20,5	mNm
Rated current (thermal limit)	I_N	3	1,6	1,11	0,846	0,57	0,409	A
Rated speed	n_N	6 700	5 270	5 690	5 660	5 850	5 390	min⁻¹

Note: Rated values are calculated with nominal voltage and at a 22°C ambient temperature. The $R_{th2\,p}$ value has been reduced by 50%.

Note:

The diagram indicates the recommended speed in relation to the available torque at the output shaft for a given ambient temperature of 22°C.

The diagram shows the motor in different conditions of thermal coupling, i.e. mounted respectively on a plastic flange and a metal flange.

The nominal voltage (U_N) curve shows, up to the thermal limit, the operating point at nominal voltage for the motor mounted on a plastic flange. Higher torque can be achieved by further reducing the thermal resistance.

Any points of operation above the curve at nominal voltage will require a higher operating voltage. Any points below the nominal voltage curve will require less voltage.

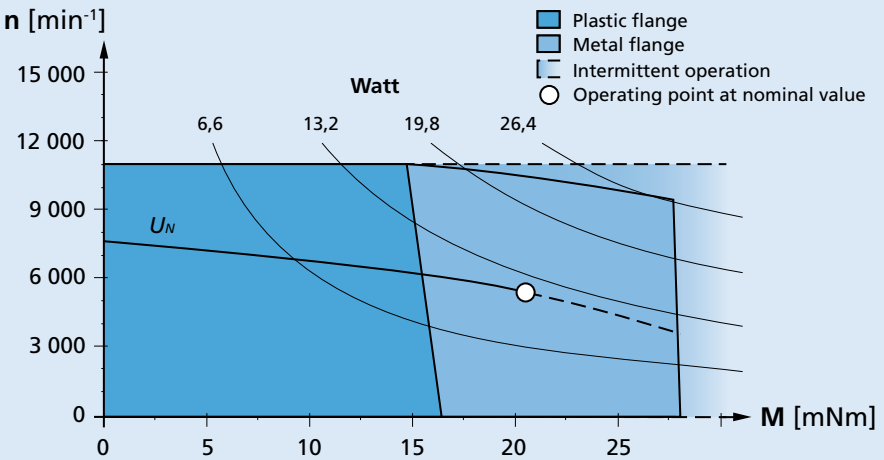

Recommended operation areas (example: nominal voltage 48V)

© DR. FRITZ FAULHABER GMBH & CO. KG
Specifications subject to change without notice.

Dimensional drawing

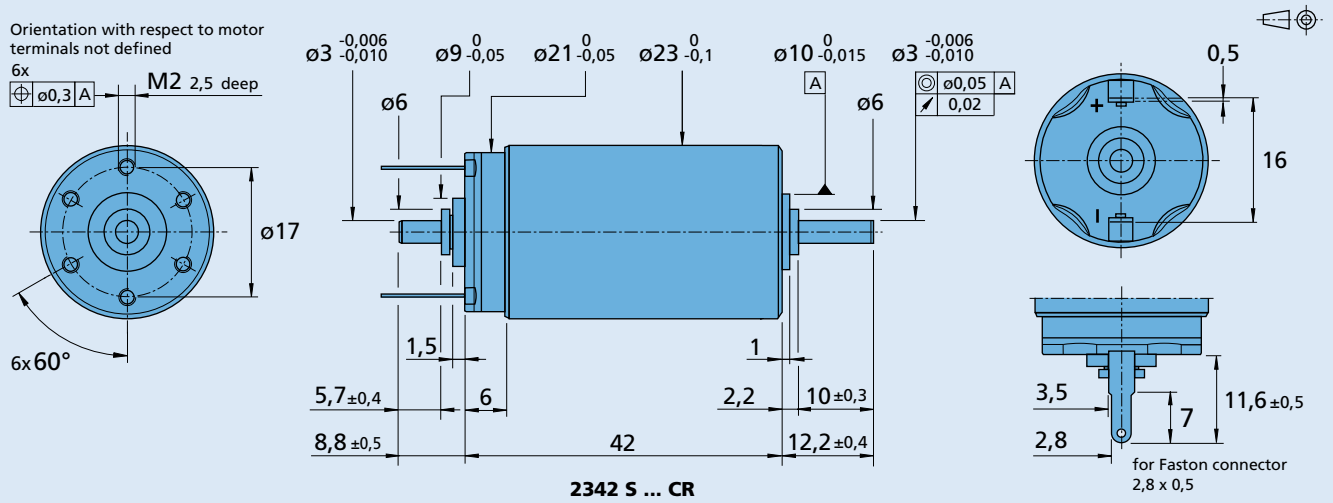

2342 S ... CR

Options

Example product designation: **2342S012CR-158**

Option	Type	Description
U	Single Leads	For motors with single leads (PTFE), length 160 mm, red (+) / black (-)
158	Shaft end	No second shaft end
X188	Brakes combination	For combination with Brakes MBZ

Product combination

Precision Gearheads / Lead Screws	Encoders	Drive Electronics	Cables / Accessories
22GPT	IE3-1024	SC 2402 P	MBZ
22/7	IE3-1024 L	SC 2804 S	
23/1	IERS3-500	SC 5004 P	To view our large range of accessory parts, please refer to the “Accessories” chapter.
26A	IERS3-500 L	SC 5008 S	
26/1R	IER3-10000	MC 3001 B	
30/1	IER3-10000 L	MC 3001 P	
30/1 S		MC 3603 S	
22L ... ML		MC 5004 P	
22L ... SB		MC 5005 S	
22L ... PB			

© DR. FRITZ FAULHABER GMBH & CO. KG
Specifications subject to change without notice.

DC-Micromotors

Graphite Commutation

32 mNm

28 W

Series 2642 ... CR

Values at 22°C and nominal voltage		2642 W	012 CR	018 CR	024 CR	036 CR	048 CR	
1 Nominal voltage	U_N		12	18	24	36	48	V
2 Terminal resistance	R		1,45	3,1	5,78	13,6	23,8	Ω
3 Efficiency, max.	$\eta_{max.}$		78	76	79	76	79	%
4 No-load speed	n_0		6 400	6 400	6 400	6 500	6 400	min^{-1}
5 No-load current, typ. (with shaft ø 4 mm)	I_0		0,118	0,079	0,058	0,039	0,029	A
6 Stall torque	M_H		132	144	139	134	137	mNm
7 Friction torque	M_R		2	2	2	2	2	mNm
8 Speed constant	k_n		565	370	276	183	137	min^{-1}/V
9 Back-EMF constant	k_E		1,77	2,7	3,62	5,47	7,31	mV/min^{-1}
10 Torque constant	k_M		16,9	25,8	34,6	52,2	69,8	mNm/A
11 Current constant	k_I		0,059	0,039	0,029	0,019	0,014	A/mNm
12 Slope of n-M curve	$\Delta n/\Delta M$		48,5	44,5	46	47,7	46,7	min^{-1}/mNm
13 Rotor inductance	L		130	300	550	1 200	2 200	µH
14 Mechanical time constant	τ_m		5,4	5,4	5,4	5,4	5,4	ms
15 Rotor inertia	J		11	12	11	11	11	gcm^2
16 Angular acceleration	$\alpha_{max.}$		120	120	120	120	120	$\cdot 10^3 rad/s^2$
17 Thermal resistance	R_{th1} / R_{th2}	2,1 / 11						K/W
18 Thermal time constant	τ_{w1} / τ_{w2}	10 / 510						s
19 Operating temperature range:								
– motor		-30 ... +125						°C
– winding, max. permissible		+155						°C
20 Shaft bearings		ball bearings, preloaded						
21 Shaft load max.:								
– with shaft diameter		4						mm
– radial at 3 000 min^{-1} (3 mm from bearing)		20						N
– axial at 3 000 min^{-1}		2						N
– axial at standstill		20						N
22 Shaft play:								
– radial	≤	0,015						mm
– axial	=	0						mm
23 Housing material		steel, black coated						
24 Mass		114						g
25 Direction of rotation		clockwise, viewed from the front face						
26 Speed up to	$n_{max.}$	7 000						min^{-1}
27 Number of pole pairs		1						
28 Magnet material		NdFeB						
Rated values for continuous operation								
29 Rated torque	M_N		30	32	32	31	32	mNm
30 Rated current (thermal limit)	I_N		2,2	1,5	1,1	0,74	0,56	A
31 Rated speed	n_N		4 390	4 490	4 370	4 340	4 330	min^{-1}

Note: Rated values are calculated with nominal voltage and at a 22°C ambient temperature. The R_{th2} value has been reduced by 25%.

Note:

The diagram indicates the recommended speed in relation to the available torque at the output shaft for a given ambient temperature of 22°C.

The diagram shows the motor in a completely insulated as well as thermally coupled condition (R_{th2} 50% reduced).

The nominal voltage (U_N) curve shows the operating point at nominal voltage in the insulated and thermally coupled condition. Any points of operation above the curve at nominal voltage will require a higher operating voltage. Any points below the nominal voltage curve will require less voltage.

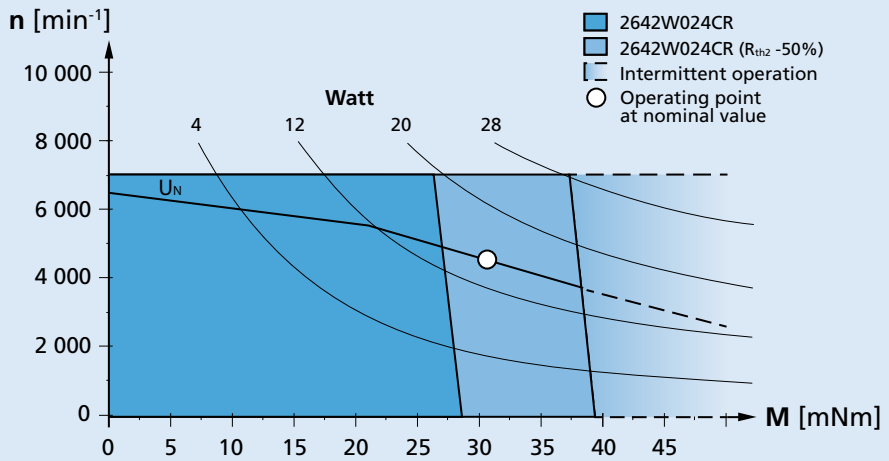

Recommended operation areas (example: nominal voltage 24V)

For notes on technical data and lifetime performance refer to "Technical Information".

Backwards

© DR. FRITZ FAULHABER GMBH & CO. KG
Specifications subject to change without notice.

Dimensional drawing

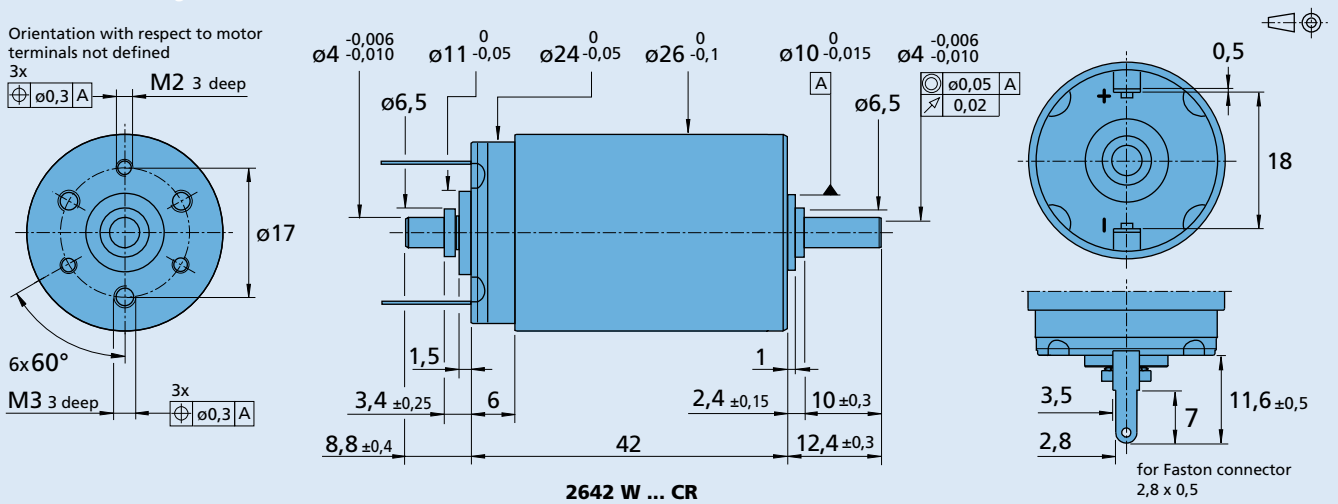

2642 W ... CR

Options

Example product designation: **2642W012CR-158**

Option	Type	Description
U	Single Leads	For motors with single leads (PTFE), length 160 mm, red (+) / black (-)
158	Shaft end	No second shaft end

Product combination

Precision Gearheads / Lead Screws	Encoders	Drive Electronics	Cables / Accessories
22GPT	IE3-1024	SC 2402 P	MBZ
26A	IE3-1024 L	SC 2804 S	
26/1R	IERS3-500	SC 5004 P	To view our large range of accessory parts, please refer to the “Accessories” chapter.
30/1	IERS3-500 L	SC 5008 S	
30/1 S	IER3-10000	MC 3001 B	
32GPT	IER3-10000 L	MC 3001 P	
22L ... ML		MC 3603 S	
22L ... SB		MC 5004 P	
22L ... PB		MC 5005 S	
32L ... TL			
32L ... ML			
32L ... SB			
32L ... PB			

© DR. FRITZ FAULHABER GMBH & CO. KG
Specifications subject to change without notice.

DC-Micromotors

Graphite Commutation

51,1 mNm

37 W

Series 2657 ... CR

Values at 22°C and nominal voltage	2657 W		012 CR	018 CR	024 CR	036 CR	048 CR	
Nominal voltage	U_N		12	18	24	36	48	V
Terminal resistance	R		0,711	1,7	2,85	6,78	12,5	Ω
Rotor inductance	L		93,2	217	373	868	1 530	µH
Efficiency, max.	$\eta_{max.}$		81	82	83	83	83	%
No-load current, typ.	I_0		0,11	0,0723	0,0552	0,0362	0,0272	A
No-load speed	n_0		6 020	6 000	6 150	6 090	6 130	min⁻¹
Stall torque	M_H		296	288	302	292	282	mNm
Rotor inertia	J		16	16	17	16	15	gcm²
Friction torque	M_R		2	2	2	2	2	mNm
Torque constant	k_M		18,4	28,1	36,9	56,2	74,7	mNm/A
Speed constant	k_n		518	340	259	170	128	min⁻¹/V
Slope of n-M curve	$\Delta n/\Delta M$		20	20,5	20	20,5	21,4	min⁻¹/mNm
Thermal resistance:								
– winding to housing	R_{th1}	4,1						K/W
– housing to ambient (external plastic flange)	$R_{th2\,p}$	12						K/W
– housing to ambient (external metal flange)	$R_{th2\,m}$	2,7						K/W
Thermal time constant:								
– winding	τ_{w1}	30						s
– housing (external plastic flange)	$\tau_{w2\,p}$	740						s
– housing (external metal flange)	$\tau_{w2\,m}$	170						s
Operating temperature range:								
– motor		-30 ... +125						°C
– winding, max. permissible		+155						°C
Shaft bearings		ball bearings, preloaded						
Shaft diameter		4						mm
Radial shaft load max.:								
– dynamic at 3 000 min⁻¹ (3 mm from bearing)		20						N
Axial shaft load max.:								
– dynamic at 3 000 min⁻¹		2						N
– static (shaft unsupported)		20						N
– static (shaft supported)		1 400						N
Shaft play, max.:								
– radial		0,015						mm
– axial		0						mm
Speed up to	$n_{max.}$	7 000						min⁻¹
Number of pole pairs		1						
Mass		156						g
Housing material		steel, nickel plated						
Magnet material		NdFeB						

Rated values for continuous operation								
Rated torque	M_N		46,9	50,2	51,1	50,8	49,9	mNm
Rated current (thermal limit)	I_N		3	2,17	1,69	1,1	0,814	A
Rated speed	n_N		4 980	4 730	4 910	4 800	4 800	min⁻¹

Note: Rated values are calculated with nominal voltage and at a 22°C ambient temperature. The $R_{th2\,p}$ value has been reduced by 50%.

Note:

The diagram indicates the recommended speed in relation to the available torque at the output shaft for a given ambient temperature of 22°C.

The diagram shows the motor in different conditions of thermal coupling, i.e. mounted respectively on a plastic flange and a metal flange.

The nominal voltage (U_N) curve shows, up to the thermal limit, the operating point at nominal voltage for the motor mounted on a plastic flange. Higher torque can be achieved by further reducing the thermal resistance.

Any points of operation above the curve at nominal voltage will require a higher operating voltage. Any points below the nominal voltage curve will require less voltage.

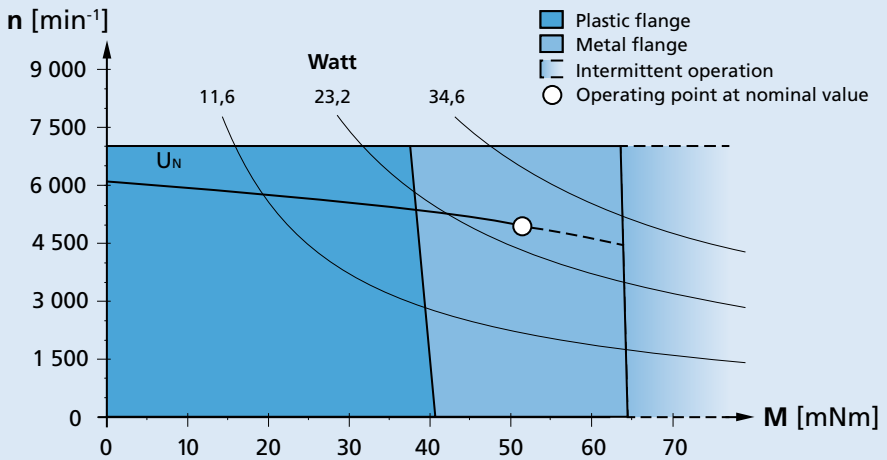

Recommended operation areas (example: nominal voltage 24V)

© DR. FRITZ FAULHABER GMBH & CO. KG
Specifications subject to change without notice.

Dimensional drawing

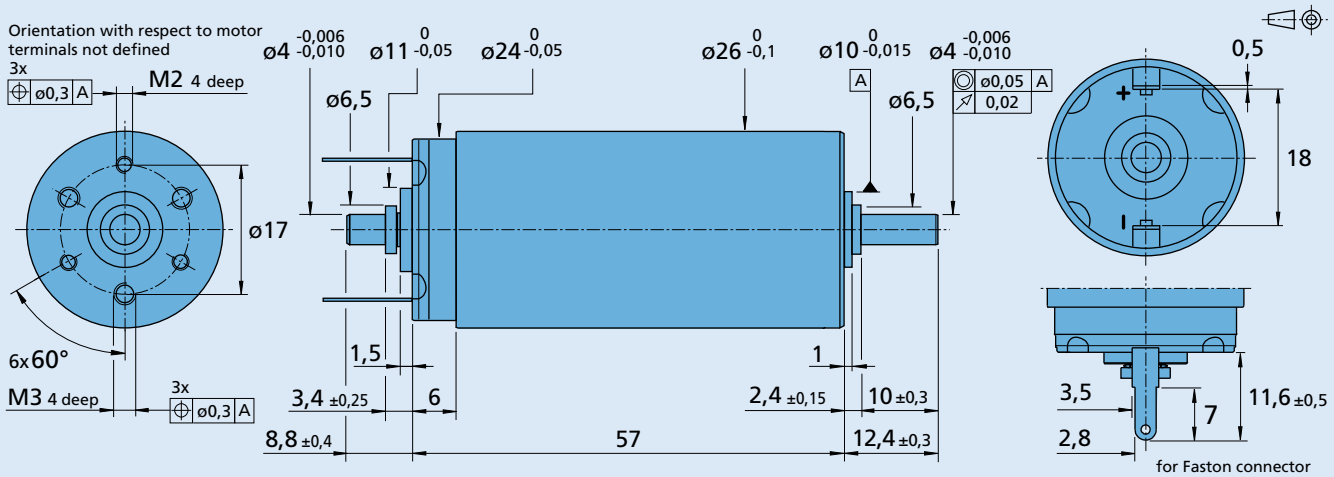

2657 W ... CR

Options

Example product designation: **2657W012CR-158**

Option	Type	Description
U	Single Leads	For motors with single leads (PTFE), length 160 mm, red (+) / black (-)
158	Shaft end	No second shaft end

Product combination

Precision Gearheads / Lead Screws	Encoders	Drive Electronics	Cables / Accessories
22GPT	IE3-1024	SC 2402 P	MBZ
26A	IE3-1024 L	SC 2804 S	
26/1R	IERS3-500	SC 5004 P	To view our large range of accessory parts, please refer to the “Accessories” chapter.
30/1	IERS3-500 L	SC 5008 S	
30/1 S	IER3-10000	MC 3603 S	
32GPT	IER3-10000 L	MC 5004 P	
22L ... ML		MC 5005 S	
22L ... SB			
22L ... PB			
32L ... TL			
32L ... ML			
32L ... SB			
32L ... PB			

© DR. FRITZ FAULHABER GMBH & CO. KG
Specifications subject to change without notice.

DC-Micromotors 70 mNm

Graphite Commutation 84 W

Series 2668 ... CR

Values at 22°C and nominal voltage		2668 W	018 CR	024 CR	036 CR	048 CR	
1 Nominal voltage	U_N		18	24	36	48	V
2 Terminal resistance	R		0,57	1,03	2,53	4,23	Ω
3 Efficiency, max.	$\eta_{max.}$		86	87	87	88	%
4 No-load speed	n_0		7 900	7 800	7 500	7 700	min^{-1}
5 No-load current, typ. (with shaft ø 4 mm)	I_0		0,105	0,078	0,05	0,038	A
6 Stall torque	M_H		653	656	632	660	mNm
7 Friction torque	M_R		2,2	2,2	2,2	2,2	mNm
8 Speed constant	k_n		448	331	211	162	min^{-1}/V
9 Back-EMF constant	k_E		2,24	3,02	4,73	6,18	mV/min^{-1}
10 Torque constant	k_M		21,3	28,9	45,2	59	mNm/A
11 Current constant	k_I		0,047	0,035	0,022	0,017	A/mNm
12 Slope of n-M curve	$\Delta n/\Delta M$		12	11,8	11,8	11,6	min^{-1}/mNm
13 Rotor inductance	L		87	158	390	660	µH
14 Mechanical time constant	τ_m		3,4	3,1	3,1	3,2	ms
15 Rotor inertia	J		27	25	25	26	gcm^2
16 Angular acceleration	$\alpha_{max.}$		242	263	253	254	$\cdot 10^3 rad/s^2$
17 Thermal resistance	R_{th1} / R_{th2}	3 / 8					K/W
18 Thermal time constant	τ_{w1} / τ_{w2}	33 / 600					s
19 Operating temperature range:							
– motor		-30 ... +125					°C
– winding, max. permissible		+155					°C
20 Shaft bearings		ball bearings, preloaded					
21 Shaft load max.:							
– with shaft diameter		4					mm
– radial at 3 000 min^{-1} (3 mm from bearing)		20					N
– axial at 3 000 min^{-1}		2					N
– axial at standstill		20					N
22 Shaft play:							
– radial	≤	0,015					mm
– axial	=	0					mm
23 Housing material		steel, black coated					
24 Mass		189					g
25 Direction of rotation		clockwise, viewed from the front face					
26 Speed up to	$n_{max.}$	10 000					min^{-1}
27 Number of pole pairs		1					
28 Magnet material		NdFeB					
Rated values for continuous operation							
29 Rated torque	M_N		56	68	69	70	mNm
30 Rated current (thermal limit)	I_N		3	2,8	1,8	1,4	A
31 Rated speed	n_N		7 480	7 370	7 030	7 260	min^{-1}

Note: Rated values are calculated with nominal voltage and at a 22°C ambient temperature. The R_{th2} value has been reduced by 25%.

Note:

The diagram indicates the recommended speed in relation to the available torque at the output shaft for a given ambient temperature of 22°C.

The diagram shows the motor in a completely insulated as well as thermally coupled condition (R_{th2} 50% reduced).

The nominal voltage (U_N) curve shows the operating point at nominal voltage in the insulated and thermally coupled condition. Any points of operation above the curve at nominal voltage will require a higher operating voltage. Any points below the nominal voltage curve will require less voltage.

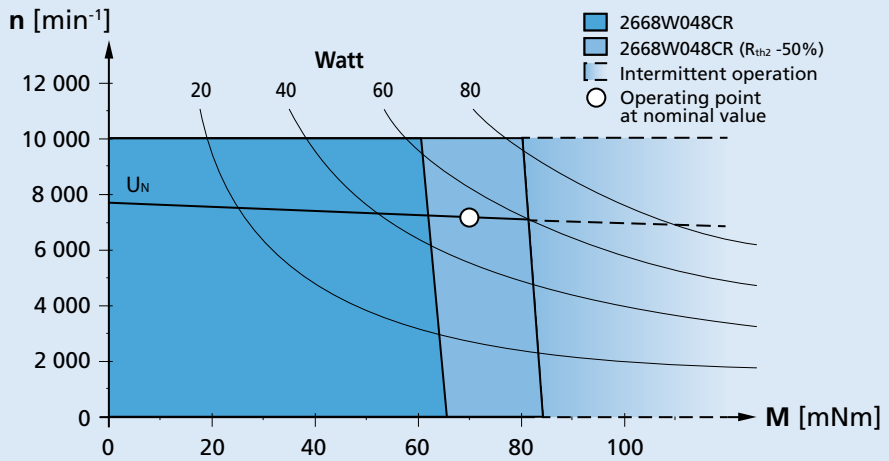

Recommended operation areas (example: nominal voltage 48V)

© DR. FRITZ FAULHABER GMBH & CO. KG
Specifications subject to change without notice.

Dimensional drawing

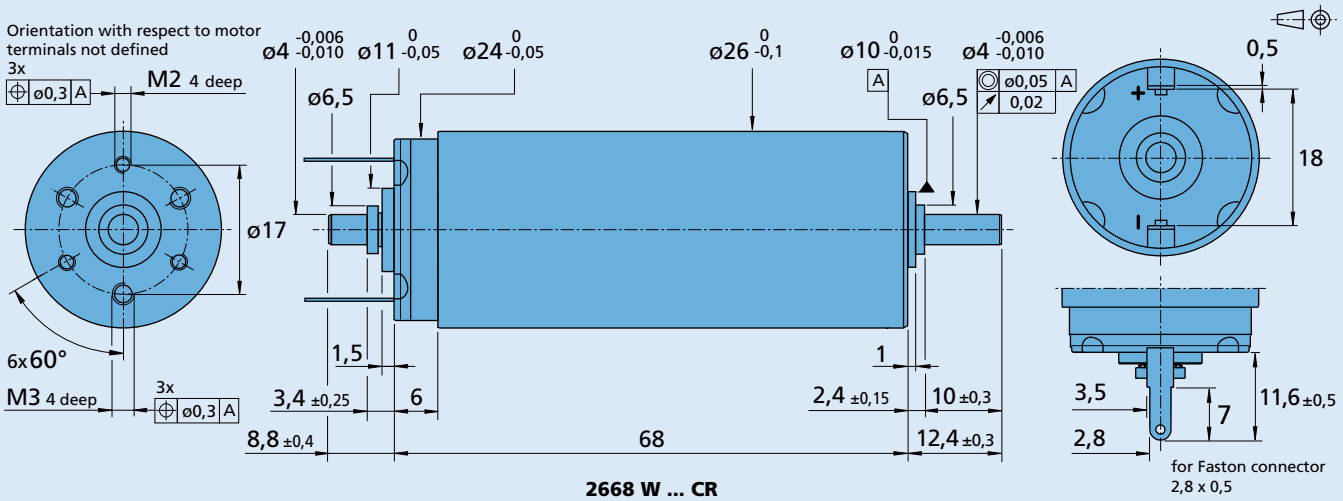

Options

Example product designation: **2668W048CR-158**

Option	Type	Description
U	Single Leads	For motors with single leads (PTFE), length 160 mm, red (+) / black (-)
158	Shaft end	No second shaft end

Product combination

Precision Gearheads / Lead Screws	Encoders	Drive Electronics	Cables / Accessories
22GPT	IE3-1024	SC 2804 S	MBZ
26A	IE3-1024 L	SC 5004 P	
26/1R	IERS3-500	SC 5008 S	To view our large range of accessory parts, please refer to the “Accessories” chapter.
30/1	IERS3-500 L	MC 3603 S	
30/1 S	IER3-10000	MC 5004 P	
32GPT	IER3-10000 L	MC 5005 S	
32/3R			
22L ... ML			
22L ... SB			
22L ... PB			
32L ... TL			
32L ... ML			
32L ... SB			
32L ... PB			

© DR. FRITZ FAULHABER GMBH & CO. KG
Specifications subject to change without notice.

DC-Micromotors

41 mNm

Graphite Commutation

30 W

Series 3242 ... CR

Values at 22°C and nominal voltage		3242 G	012 CR	018 CR	024 CR	036 CR	048 CR	
1 Nominal voltage	U_N		12	18	24	36	48	V
2 Terminal resistance	R		1,27	2,73	5	10,5	19,7	Ω
3 Efficiency, max.	$\eta_{max.}$		72	70	73	71	73	%
4 No-load speed	n_0		5 200	5 300	5 300	5 500	5 400	min^{-1}
5 No-load current, typ. (with shaft ø 5 mm)	I_0		0,234	0,157	0,117	0,081	0,058	A
6 Stall torque	M_H		181	196	189	202	193	mNm
7 Friction torque	M_R		4,8	4,8	4,8	4,8	4,8	mNm
8 Speed constant	k_n		464	304	231	156	116	min^{-1}/V
9 Back-EMF constant	k_E		2,15	3,29	4,33	6,42	8,58	mV/min^{-1}
10 Torque constant	k_M		20,6	31,4	41,3	61,3	82	mNm/A
11 Current constant	k_I		0,049	0,032	0,024	0,016	0,012	A/mNm
12 Slope of n-M curve	$\Delta n/\Delta M$		28,7	26,4	28	26,7	28	min^{-1}/mNm
13 Rotor inductance	L		135	310	540	1 220	2 200	µH
14 Mechanical time constant	τ_m		7,5	7,5	7,5	7,5	7,5	ms
15 Rotor inertia	J		25	27	26	27	26	gcm^2
16 Angular acceleration	$\alpha_{max.}$		73	73	74	75	75	$\cdot 10^3 rad/s^2$
17 Thermal resistance	R_{th1} / R_{th2}	2,5 / 9						K/W
18 Thermal time constant	τ_{w1} / τ_{w2}	17 / 660						s
19 Operating temperature range:								
– motor		-30 ... +125						°C
– winding, max. permissible		+155						°C
20 Shaft bearings		ball bearings, preloaded						
21 Shaft load max.:								
– with shaft diameter		5						mm
– radial at 3 000 min^{-1} (3 mm from bearing)		50						N
– axial at 3 000 min^{-1}		5						N
– axial at standstill		50						N
22 Shaft play:								
– radial	≤	0,015						mm
– axial	=	0						mm
23 Housing material		steel, black coated						
24 Mass		175						g
25 Direction of rotation		clockwise, viewed from the front face						
26 Speed up to	$n_{max.}$	6 000						min^{-1}
27 Number of pole pairs		1						
28 Magnet material		NdFeB						
Rated values for continuous operation								
29 Rated torque	M_N		40	41	41	41,7	41	mNm
30 Rated current (thermal limit)	I_N		2,5	1,7	1,3	0,89	0,65	A
31 Rated speed	n_N		3 580	3 690	3 690	3 900	3 780	min^{-1}

Note: Rated values are calculated with nominal voltage and at a 22°C ambient temperature. The R_{th2} value has been reduced by 25%.

Note:

The diagram indicates the recommended speed in relation to the available torque at the output shaft for a given ambient temperature of 22°C.

The diagram shows the motor in a completely insulated as well as thermally coupled condition (R_{th2} 50% reduced).

The nominal voltage (U_N) curve shows the operating point at nominal voltage in the insulated and thermally coupled condition. Any points of operation above the curve at nominal voltage will require a higher operating voltage. Any points below the nominal voltage curve will require less voltage.

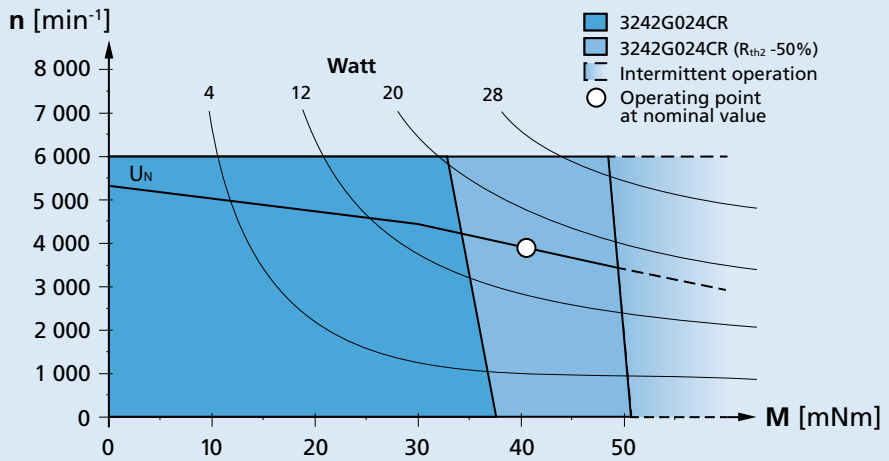

Recommended operation areas (example: nominal voltage 24V)

For notes on technical data and lifetime performance refer to "Technical Information".

Backwards

© DR. FRITZ FAULHABER GMBH & CO. KG
Specifications subject to change without notice.

Dimensional drawing

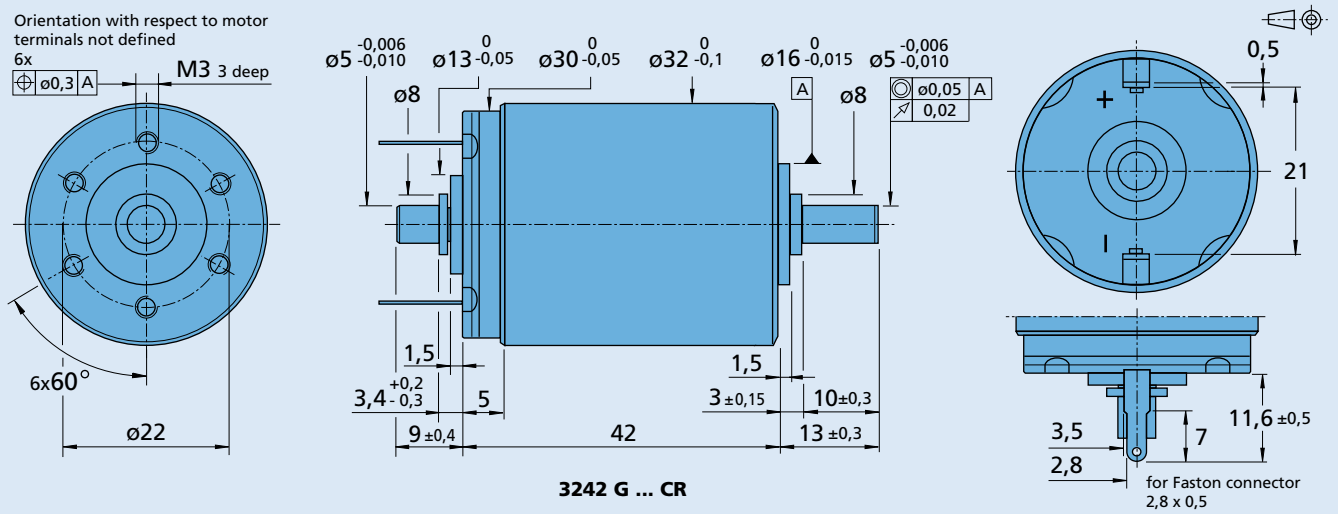

3242 G ... CR

Options

Example product designation: **3242G012CR-158**

Option	Type	Description
U	Single Leads	For motors with single leads (PTFE), length 160 mm, red (+) / black (-)
158	Shaft end	No second shaft end

Product combination

Precision Gearheads / Lead Screws	Encoders	Drive Electronics	Cables / Accessories
32GPT	IE3-1024	SC 2402 P	MBZ
32/3R	IE3-1024 L	SC 2804 S	
38/1	IERS3-500	SC 5004 P	To view our large range of accessory parts, please refer to the "Accessories" chapter.
38/1 S	IERS3-500 L	SC 5008 S	
38/2	IER3-10000	MC 3603 S	
38/2 S	IER3-10000 L	MC 5004 P	
42GPT		MC 5005 S	
32L ... TL		MC 5010 S	
32L ... ML			
32L ... SB			
32L ... PB			

© DR. FRITZ FAULHABER GMBH & CO. KG
Specifications subject to change without notice.

DC-Micromotors

Graphite Commutation

73,1 mNm

52,2 W

Series 3257 ... CR

Values at 22°C and nominal voltage	3257 G		012 CR	018 CR	024 CR	036 CR	048 CR	
Nominal voltage	U_N		12	18	24	36	48	V
Terminal resistance	R		0,407	0,837	1,63	4,15	6,56	Ω
Rotor inductance	L		68,6	142	274	697	1 100	µH
Efficiency, max.	$\eta_{max.}$		79	80	80	80	81	%
No-load current, typ.	I_0		0,265	0,185	0,133	0,083	0,0663	A
No-load speed	n_0		5 880	6 240	6 010	5 680	6 070	min⁻¹
Stall torque	M_H		536	570	548	517	549	mNm
Rotor inertia	J		42	41	41	42	42	gcm²
Friction torque	M_R		4,9	4,9	4,9	4,9	4,9	mNm
Torque constant	k_M		19,1	27,5	38,3	61,1	76,6	mNm/A
Speed constant	k_n		499	347	250	157	125	min⁻¹/V
Slope of n-M curve	$\Delta n/\Delta M$		10,6	10,6	10,6	10,6	10,7	min⁻¹/mNm
Thermal resistance:								
– winding to housing	R_{th1}	3,4						K/W
– housing to ambient (external plastic flange)	$R_{th2\,p}$	9,8						K/W
– housing to ambient (external metal flange)	$R_{th2\,m}$	1,5						K/W
Thermal time constant:								
– winding	τ_{w1}	36						s
– housing (external plastic flange)	$\tau_{w2\,p}$	970						s
– housing (external metal flange)	$\tau_{w2\,m}$	150						s
Operating temperature range:								
– motor		-30 ... +125						°C
– winding, max. permissible		+155						°C
Shaft bearings		ball bearings, preloaded						
Shaft diameter		5						mm
Radial shaft load max.:								
– dynamic at 3 000 min⁻¹ (3 mm from bearing)		50						N
Axial shaft load max.:								
– dynamic at 3 000 min⁻¹		5						N
– static (shaft unsupported)		50						N
– static (shaft supported)		2 000						N
Shaft play, max.:								
– radial		0,015						mm
– axial		0						mm
Speed up to	$n_{max.}$	7 000						min⁻¹
Number of pole pairs		1						
Mass		242						g
Housing material		steel, nickel plated						
Magnet material		NdFeB						

Rated values for continuous operation								
Rated torque	M_N		63,4	71,3	72,2	73,1	72,8	mNm
Rated current (thermal limit)	I_N		4	3,24	2,36	1,5	1,19	A
Rated speed	n_N		5 170	5 430	5 160	4 780	5 210	min⁻¹

Note: Rated values are calculated with nominal voltage and at a 22°C ambient temperature. The $R_{th2\,p}$ value has been reduced by 50%.

Note:

The diagram indicates the recommended speed in relation to the available torque at the output shaft for a given ambient temperature of 22°C.

The diagram shows the motor in different conditions of thermal coupling, i.e. mounted respectively on a plastic flange and a metal flange.

The nominal voltage (U_N) curve shows, up to the thermal limit, the operating point at nominal voltage for the motor mounted on a plastic flange. Higher torque can be achieved by further reducing the thermal resistance.

Any points of operation above the curve at nominal voltage will require a higher operating voltage. Any points below the nominal voltage curve will require less voltage.

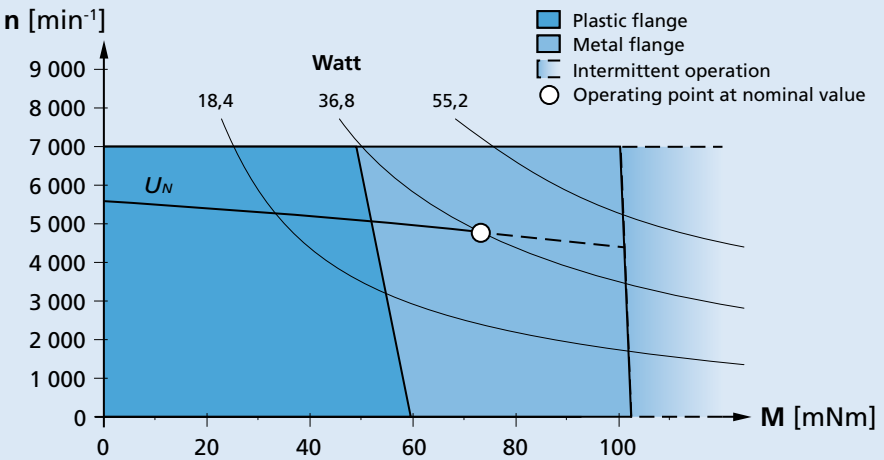

Recommended operation areas (example: nominal voltage 36V)

© DR. FRITZ FAULHABER GMBH & CO. KG
Specifications subject to change without notice.

Dimensional drawing

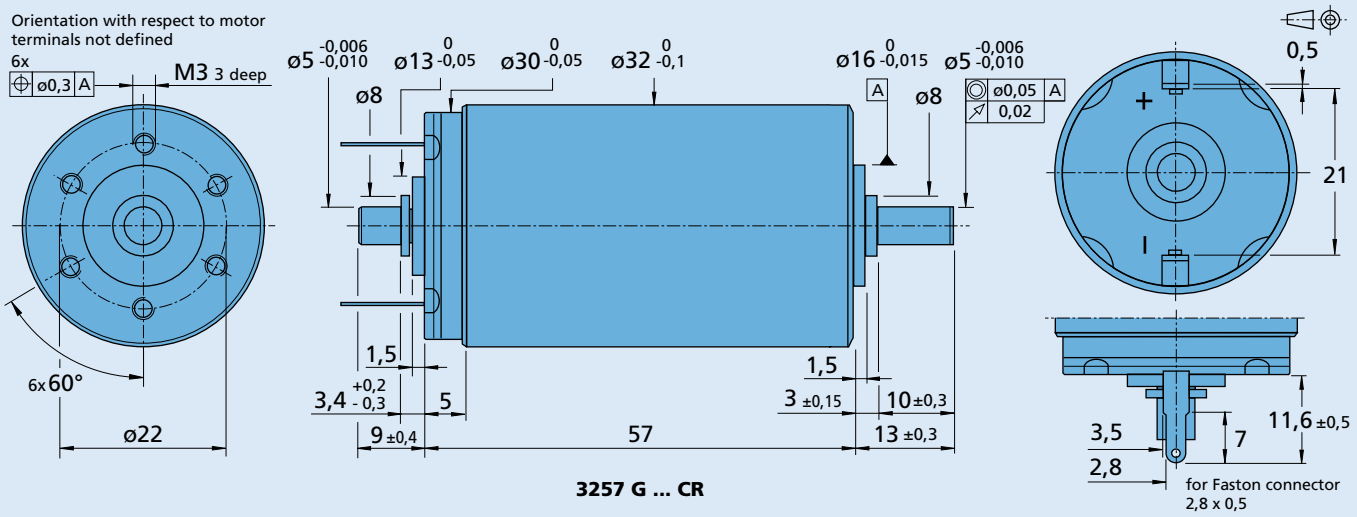

3257 G ... CR

Options

Example product designation: **3257G012CR-158**

Option	Type	Description
U	Single Leads	For motors with single leads (PTFE), length 160 mm, red (+) / black (-)
158	Shaft end	No second shaft end

Product combination

Precision Gearheads / Lead Screws	Encoders	Drive Electronics	Cables / Accessories
32GPT	IE3-1024	SC 2402 P	MBZ
32/3R	IE3-1024 L	SC 2804 S	
38/1	IERS3-500	SC 5004 P	To view our large range of accessory parts, please refer to the "Accessories" chapter.
38/1 S	IERS3-500 L	SC 5008 S	
38/2	IER3-10000	MC 3603 S	
38/2 S	IER3-10000 L	MC 5004 P	
42GPT		MC 5005 S	
32L ... TL		MC 5010 S	
32L ... ML			
32L ... SB			
32L ... PB			

© DR. FRITZ FAULHABER GMBH & CO. KG
Specifications subject to change without notice.

DC-Micromotors

Graphite Commutation

125 mNm

77,8 W

Series 3272 ... CR

Values at 22°C and nominal voltage	3272 G		012 CR	018 CR	024 CR	036 CR	048 CR	
Nominal voltage	U_N		12	18	24	36	48	V
Terminal resistance	R		0,205	0,418	0,82	1,67	3,35	Ω
Rotor inductance	L		46,2	92,7	185	371	739	µH
Efficiency, max.	$\eta_{max.}$		85	87	87	88	88	%
No-load current, typ.	I_0		0,192	0,135	0,0958	0,0695	0,0479	A
No-load speed	n_0		5 370	5 780	5 490	5 870	5 550	min⁻¹
Stall torque	M_H		1 160	1 230	1 190	1 250	1 180	mNm
Rotor inertia	J		67	60	63	62	60	gcm²
Friction torque	M_R		3,9	3,9	3,9	4	3,9	mNm
Torque constant	k_M		20,8	29,5	41,6	59	83,3	mNm/A
Speed constant	k_n		459	324	229	162	115	min⁻¹/V
Slope of n-M curve	$\Delta n/\Delta M$		4,52	4,59	4,52	4,59	4,61	min⁻¹/mNm
Thermal resistance:								
– winding to housing	R_{th1}	2,9						K/W
– housing to ambient (external plastic flange)	$R_{th2\,p}$	8,6						K/W
– housing to ambient (external metal flange)	$R_{th2\,m}$	1,6						K/W
Thermal time constant:								
– winding	τ_{w1}	50						s
– housing (external plastic flange)	$\tau_{w2\,p}$	1 100						s
– housing (external metal flange)	$\tau_{w2\,m}$	200						s
Operating temperature range:								
– motor		-30 ... +125						°C
– winding, max. permissible		+155						°C
Shaft bearings		ball bearings, preloaded						
Shaft diameter		5						mm
Radial shaft load max.:								
– dynamic at 3 000 min⁻¹ (3 mm from bearing)		50						N
Axial shaft load max.:								
– dynamic at 3 000 min⁻¹		5						N
– static (shaft unsupported)		50						N
– static (shaft supported)		2 000						N
Shaft play, max.:								
– radial		0,015						mm
– axial		0						mm
Speed up to	$n_{max.}$	6 000						min⁻¹
Number of pole pairs		1						
Mass		312						g
Housing material		steel, nickel plated						
Magnet material		NdFeB						

Rated values for continuous operation								
Rated torque	M_N		75,2	103	124	124	125	mNm
Rated current (thermal limit)	I_N		4	4	3,6	2,53	1,81	A
Rated speed	n_N		5 090	5 440	5 110	5 510	5 140	min⁻¹

Note: Rated values are calculated with nominal voltage and at a 22°C ambient temperature. The $R_{th2\,p}$ value has been reduced by 50%.

Note:

The diagram indicates the recommended speed in relation to the available torque at the output shaft for a given ambient temperature of 22°C.

The diagram shows the motor in different conditions of thermal coupling, i.e. mounted respectively on a plastic flange and a metal flange.

The nominal voltage (U_N) curve shows, up to the thermal limit, the operating point at nominal voltage for the motor mounted on a plastic flange. Higher torque can be achieved by further reducing the thermal resistance.

Any points of operation above the curve at nominal voltage will require a higher operating voltage. Any points below the nominal voltage curve will require less voltage.

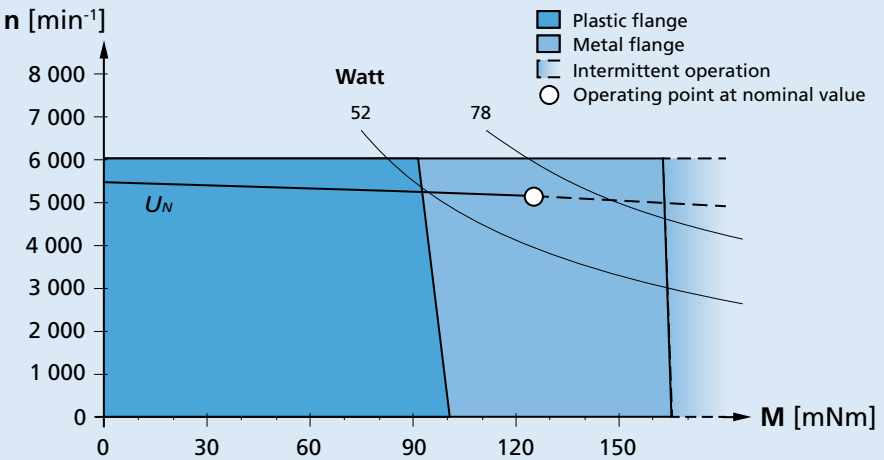

Recommended operation areas (example: nominal voltage 48V)

© DR. FRITZ FAULHABER GMBH & CO. KG
Specifications subject to change without notice.

Dimensional drawing

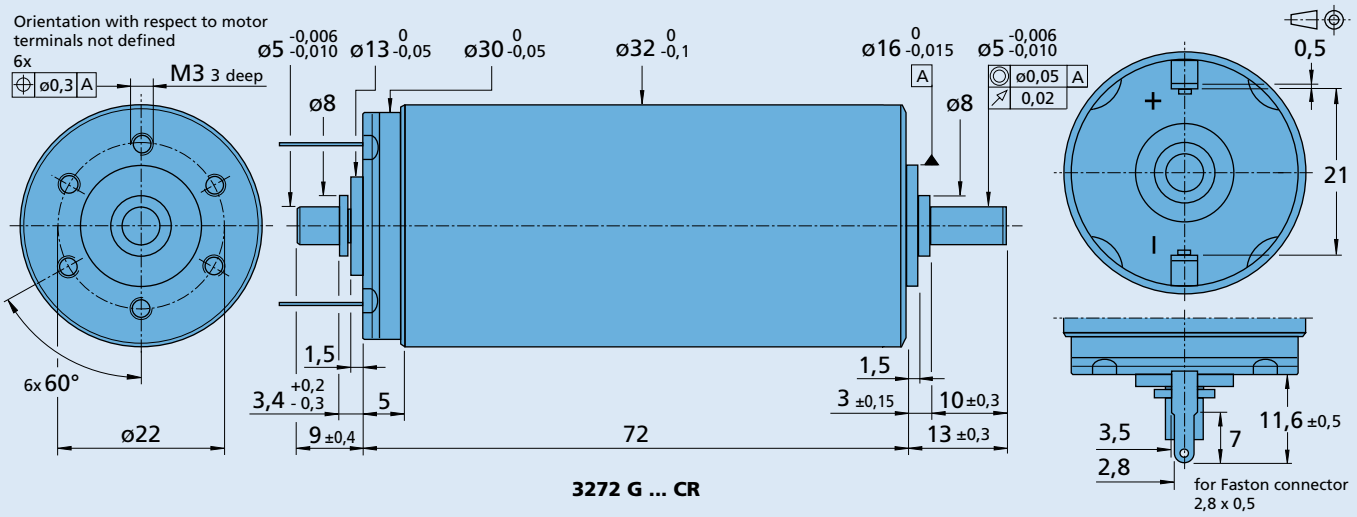

Options

Example product designation: **3272G012CR-158**

Option	Type	Description
U	Single Leads	For motors with single leads (PTFE), length 160 mm, red (+) / black (-)
158	Shaft end	No second shaft end

Product combination

Precision Gearheads / Lead Screws	Encoders	Drive Electronics	Cables / Accessories
32GPT	IE3-1024	SC 2402 P	MBZ
32/3R	IE3-1024 L	SC 2804 S	
38/1	IERS3-500	SC 5004 P	To view our large range of accessory parts, please refer to the "Accessories" chapter.
38/1 S	IERS3-500 L	SC 5008 S	
38/2	IER3-10000	MC 5004 P	
38/2 S	IER3-10000 L	MC 5005 S	
42GPT		MC 5010 S	
32L ... TL			
32L ... ML			
32L ... SB			
32L ... PB			

© DR. FRITZ FAULHABER GMBH & CO. KG
Specifications subject to change without notice.

DC-Micromotors

137 mNm

Graphite Commutation

98,2 W

Series 3863 ... CR

Values at 22°C and nominal voltage	3863 H		012 CR	018 CR	024 CR	036 CR	048 CR	
Nominal voltage	U_N		12	18	24	36	48	V
Terminal resistance	R		0,161	0,365	0,663	1,55	2,59	Ω
Rotor inductance	L		44,3	92,4	177	398	708	µH
Efficiency, max.	$\eta_{max.}$		83	84	85	85	86	%
No-load current, typ.	I_0		0,338	0,234	0,163	0,113	0,0845	A
No-load speed	n_0		5 680	5 990	5 800	5 840	5 860	min⁻¹
Stall torque	M_H		1 410	1 370	1 410	1 370	1 460	mNm
Rotor inertia	J		120	110	120	110	115	gcm²
Friction torque	M_R		6,5	6,5	6,5	6,5	6,5	mNm
Torque constant	k_M		19,9	28,8	39,8	59,8	79,7	mNm/A
Speed constant	k_n		479	332	240	160	120	min⁻¹/V
Slope of n-M curve	$\Delta n/\Delta M$		3,88	4,21	3,99	4,13	3,89	min⁻¹/mNm
Thermal resistance:								
– winding to housing	R_{th1}	2,8						K/W
– housing to ambient (external plastic flange)	$R_{th2\,p}$	7,7						K/W
– housing to ambient (external metal flange)	$R_{th2\,m}$	1,5						K/W
Thermal time constant:								
– winding	τ_{w1}	58						s
– housing (external plastic flange)	$\tau_{w2\,p}$	1 200						s
– housing (external metal flange)	$\tau_{w2\,m}$	240						s
Operating temperature range:								
– motor		-30 ... +125						°C
– winding, max. permissible		+155						°C
Shaft bearings		ball bearings, preloaded						
Shaft diameter		6						mm
Radial shaft load max.:								
– dynamic at 3 000 min⁻¹ (3 mm from bearing)		60						N
Axial shaft load max.:								
– dynamic at 3 000 min⁻¹		6						N
– static (shaft unsupported)		50						N
– static (shaft supported)		2 800						N
Shaft play, max.:								
– radial		0,015						mm
– axial		0						mm
Speed up to	$n_{max.}$	7 000						min⁻¹
Number of pole pairs		1						
Mass		390						g
Housing material		steel, nickel plated						
Magnet material		NdFeB						

Rated values for continuous operation								
Rated torque	M_N		69,5	99,5	131	132	137	mNm
Rated current (thermal limit)	I_N		4	4	4	2,71	2,1	A
Rated speed	n_N		5 400	5 630	5 440	5 450	5 510	min⁻¹

Note: Rated values are calculated with nominal voltage and at a 22°C ambient temperature. The $R_{th2\,p}$ value has been reduced by 50%.

Note:

The diagram indicates the recommended speed in relation to the available torque at the output shaft for a given ambient temperature of 22°C.

The diagram shows the motor in different conditions of thermal coupling, i.e. mounted respectively on a plastic flange and a metal flange.

The nominal voltage (U_N) curve shows, up to the thermal limit, the operating point at nominal voltage for the motor mounted on a plastic flange. Higher torque can be achieved by further reducing the thermal resistance.

Any points of operation above the curve at nominal voltage will require a higher operating voltage. Any points below the nominal voltage curve will require less voltage.

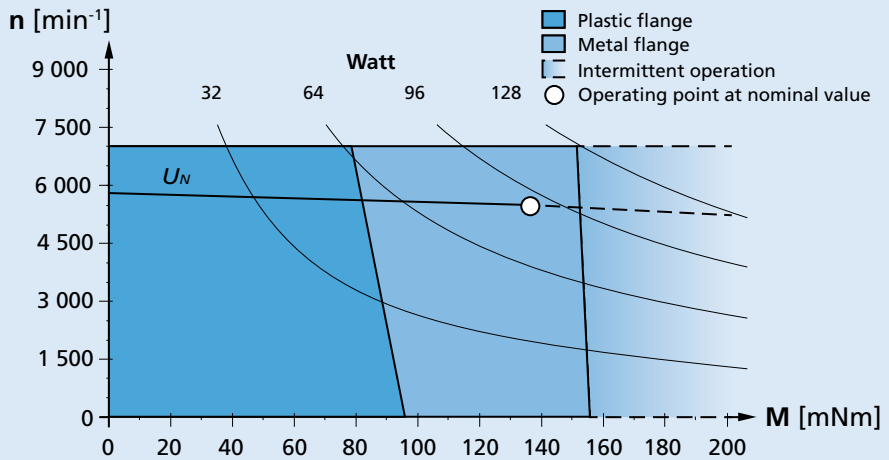

Recommended operation areas (example: nominal voltage 48V)

© DR. FRITZ FAULHABER GMBH & CO. KG
Specifications subject to change without notice.

Dimensional drawing

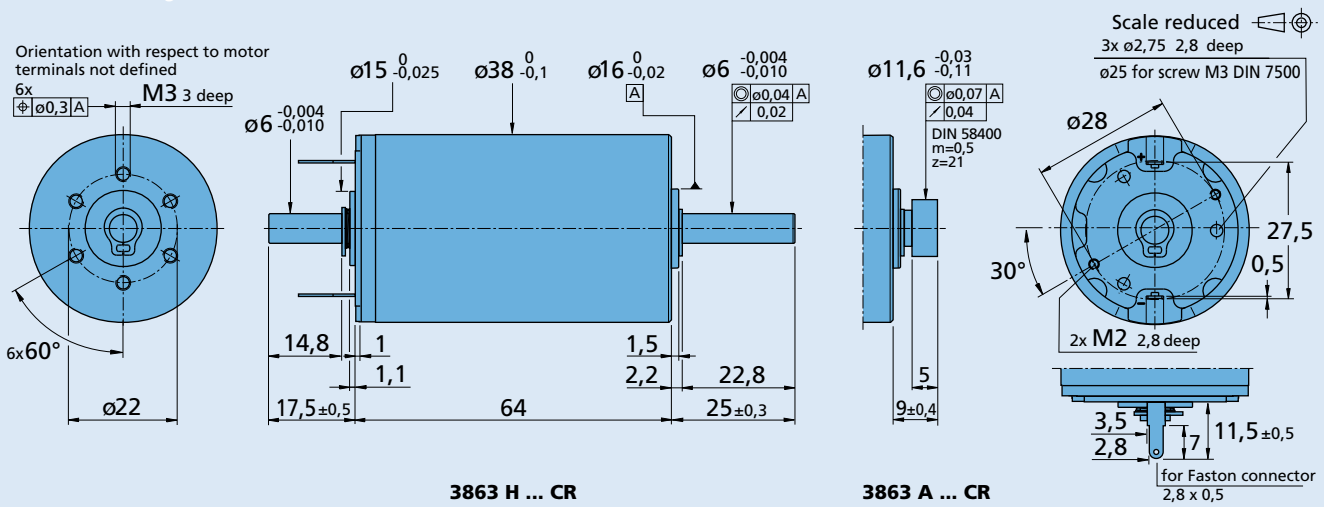

Options

Example product designation: **3863H012CR-158**

Option	Type	Description
U	Single Leads	For motors with single leads (PTFE), length 160 mm, red (+) / black (-)
158	Shaft end	No second shaft end
2016	Encoder combination	Motor with rear end shaft for combination with Encoder IE3, IERS3 and IER3
1387	Brakes combination	For combination with Brakes MBZ

Product combination

Precision Gearheads / Lead Screws	Encoders	Drive Electronics	Cables / Accessories
38/1	IE3-1024	SC 2804 S	MBZ
38/1 S	IE3-1024 L	SC 5004 P	
38/2	IERS3-500	SC 5008 S	To view our large range of accessory parts, please refer to the “Accessories” chapter.
38/2 S	IERS3-500 L	MC 5010 S	
42GPT	IER3-10000		
44/1	IER3-10000 L		

© DR. FRITZ FAULHABER GMBH & CO. KG
Specifications subject to change without notice.

DC-Micromotors

Graphite Commutation

224 mNm

160 W

Series 3890 ... CR

Values at 22°C and nominal voltage		3890 H	018 CR	024 CR	036 CR	048 CR	
1 Nominal voltage	U_N		18	24	36	48	V
2 Terminal resistance	R		0,21	0,36	0,78	1,38	Ω
3 Efficiency, max.	$\eta_{max.}$		86	87	87	88	%
4 No-load speed	n_0		5 400	5 400	5 400	5 500	min^{-1}
5 No-load current, typ. (with shaft ø 6 mm)	I_0		0,323	0,242	0,161	0,121	A
6 Stall torque	M_H		2 642	2 760	2 887	2 911	mNm
7 Friction torque	M_R		10	10	10	10	mNm
8 Speed constant	k_n		300	225	150	112	min^{-1}/V
9 Back-EMF constant	k_E		3,332	4,443	6,665	8,887	mV/min^{-1}
10 Torque constant	k_M		31,82	42,43	63,65	84,86	mNm/A
11 Current constant	k_I		0,031	0,024	0,016	0,012	A/mNm
12 Slope of n-M curve	$\Delta n/\Delta M$		2	1,9	1,8	1,8	min^{-1}/mNm
13 Rotor inductance	L		60	110	240	430	µH
14 Mechanical time constant	τ_m		3,4	3,3	3,3	3,3	ms
15 Rotor inertia	J		164	164	171	171	gcm^2
16 Angular acceleration	$\alpha_{max.}$		161	168	169	170	$\cdot 10^3 rad/s^2$
17 Thermal resistance	R_{th1} / R_{th2}	1,9 / 4,2					K/W
18 Thermal time constant	τ_{w1} / τ_{w2}	58 / 910					s
19 Operating temperature range:							
– motor		-30 ... +125					°C
– winding, max. permissible		+155					°C
20 Shaft bearings		ball bearings, preloaded					
21 Shaft load max.:							
– with shaft diameter		6					mm
– radial at 3 000 min^{-1} (3 mm from bearing)		60					N
– axial at 3 000 min^{-1}		6					N
– axial at standstill		50					N
22 Shaft play:							
– radial	≤	0,015					mm
– axial	=	0					mm
23 Housing material		steel, black coated					
24 Mass		550					g
25 Direction of rotation		clockwise, viewed from the front face					
26 Speed up to	$n_{max.}$	6 000					min^{-1}
27 Number of pole pairs		1					
28 Magnet material		NdFeB					
Rated values for continuous operation							
29 Rated torque	M_N		139	182	222	224	mNm
30 Rated current (thermal limit)	I_N		5	5	4,3	3,2	A
31 Rated speed	n_N		5 190	5 240	5 350	5 360	min^{-1}

Note: Rated values are calculated with nominal voltage and at a 22°C ambient temperature. The R_{th2} value has been reduced by 25%.

Note:

The diagram indicates the recommended speed in relation to the available torque at the output shaft for a given ambient temperature of 22°C.

The diagram shows the motor in a completely insulated as well as thermally coupled condition (R_{th2} 50% reduced).

The nominal voltage (U_N) curve shows the operating point at nominal voltage in the insulated and thermally coupled condition. Any points of operation above the curve at nominal voltage will require a higher operating voltage. Any points below the nominal voltage curve will require less voltage.

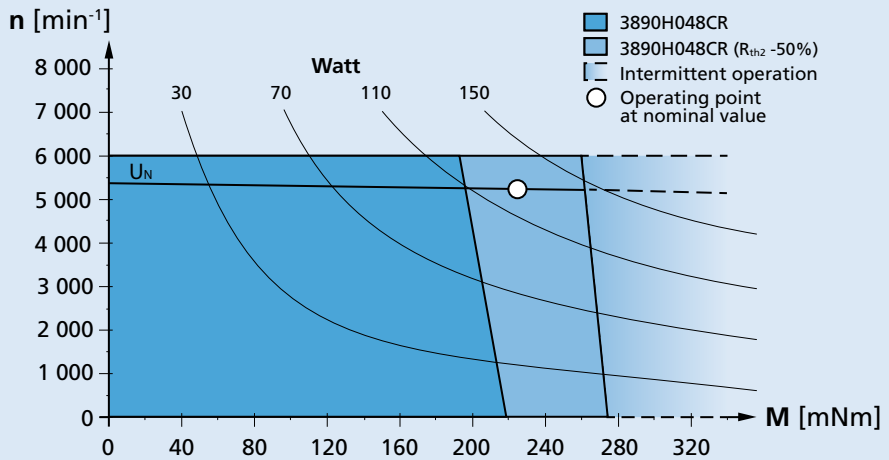

Recommended operation areas (example: nominal voltage 48V)

For notes on technical data and lifetime performance refer to "Technical Information".

Backwards

© DR. FRITZ FAULHABER GMBH & CO. KG
Specifications subject to change without notice.

Dimensional drawing

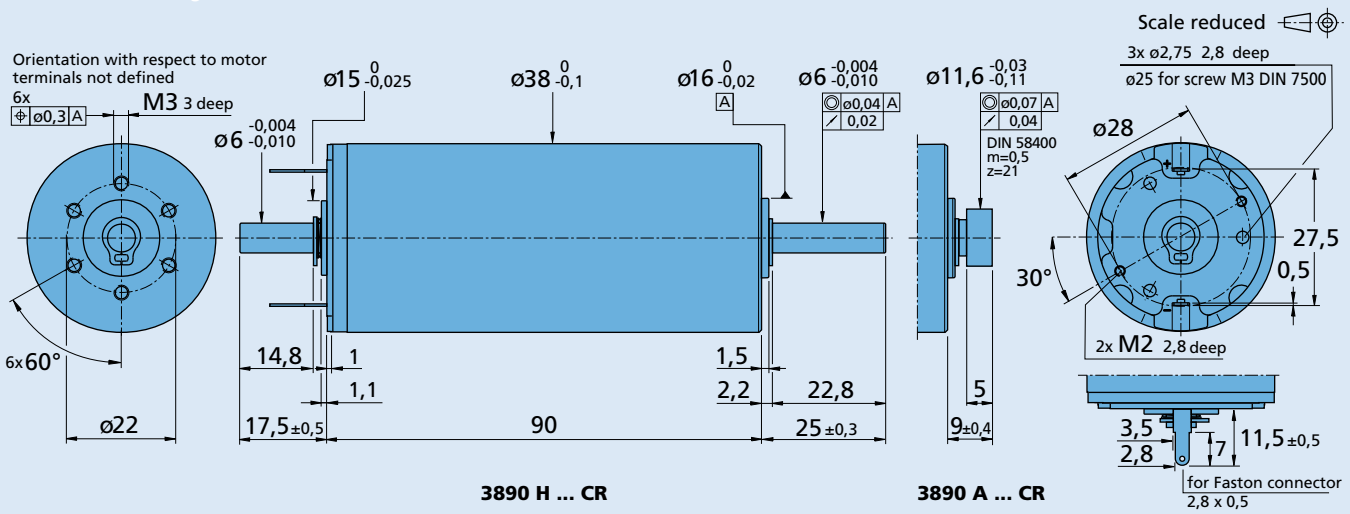

Options

Example product designation: **3890H024CR-158**

Option	Type	Description
U	Single Leads	For motors with single leads (PTFE), length 160 mm, red (+) / black (-)
158	Shaft end	No second shaft end
2016	Encoder combination	Motor with rear end shaft for combination with Encoder IE3, IERS3 and IER3
1387	Brakes combination	For combination with Brakes MBZ

Product combination

Precision Gearheads / Lead Screws	Encoders	Drive Electronics	Cables / Accessories
38/1	IE3-1024	SC 2804 S	MBZ
38/1 S	IE3-1024 L	SC 5004 P	
38/2	IERS3-500	SC 5008 S	To view our large range of accessory parts, please refer to the “Accessories” chapter.
38/2 S	IERS3-500 L	MC 5010 S	
42GPT	IER3-10000		
44/1	IER3-10000 L		

© DR. FRITZ FAULHABER GMBH & CO. KG
Specifications subject to change without notice.

FAULHABER SR-Flat

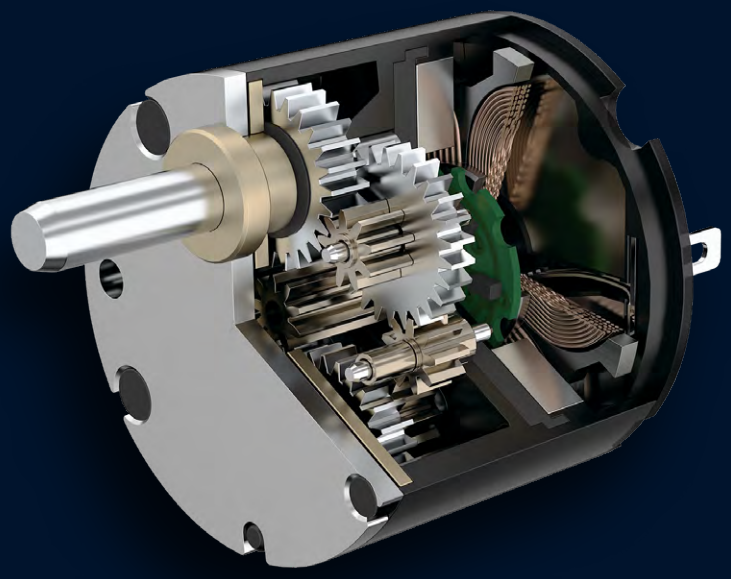

FAULHABER SR-Flat

1506...SR	Precious Metal Commutation	0.44 mNm
1506...SR IE2-8	with integrated Encoder	0.4 mNm
1512...SR	with integrated Gearhead	30 mNm
1512...SR IE2-8	with int. Gearhead and Encoder	30 mNm
2607...SR	Precious Metal Commutation	3.4 mNm
2607...SR IE2-16	with integrated Encoder	2.9 mNm
2619...SR	with integrated Gearhead	100 mNm
2619...SR IE2-16	with int. Gearhead and Encoder	100 mNm

Backwards

Flat DC-Micromotors

0,44 mNm

Precious Metal Commutation

1,12 W

Series 1506 ... SR

Values at 22°C and nominal voltage		1506 N	003 SR	006 SR	012 SR	
1 Nominal voltage	U_N		3	6	12	V
2 Terminal resistance	R		13,6	60,5	156	Ω
3 Efficiency, max.	$\eta_{max.}$		65	63	68	%
4 No-load speed	n_0		11 200	11 800	12 900	min^{-1}
5 No-load current, typ. (with shaft ø 0,8 mm)	I_0		0,00814	0,00431	0,00232	A
6 Stall torque	M_H		0,522	0,441	0,644	mNm
7 Friction torque	M_R		0,02	0,02	0,02	mNm
8 Speed constant	k_n		3 880	2 050	1 110	min^{-1}/V
9 Back-EMF constant	k_E		0,258	0,487	0,904	mV/min^{-1}
10 Torque constant	k_M		2,46	4,65	8,63	mNm/A
11 Current constant	k_I		0,406	0,215	0,116	A/mNm
12 Slope of n-M curve	$\Delta n/\Delta M$		21 500	26 700	20 000	min^{-1}/mNm
13 Rotor inductance	L		275	1 160	3 550	µH
14 Mechanical time constant	τ_m		18	22,4	16,8	ms
15 Rotor inertia	J		0,08	0,08	0,08	gcm^2
16 Angular acceleration	$\alpha_{max.}$		65	55,1	80,5	$\cdot 10^3 rad/s^2$
17 Thermal resistance	R_{th1} / R_{th2}	25 / 35				K/W
18 Thermal time constant	τ_{w1} / τ_{w2}	4,5 / 48				s
19 Operating temperature range:						
– motor		-25 ... +80				°C
– winding, max. permissible		+85				°C
20 Shaft bearings		sintered bearings				
21 Shaft load max.:						
– with shaft diameter		0,8				mm
– radial at 3 000 min^{-1} (3 mm from bearing)		0,5				N
– axial at 3 000 min^{-1}		0,1				N
– axial at standstill		10				N
22 Shaft play:						
– radial	≤	0,03				mm
– axial	≤	0,2				mm
23 Housing material		plastic				
24 Mass		4,3				g
25 Direction of rotation		clockwise, viewed from the front face				
26 Speed up to	$n_{max.}$	16 000				min^{-1}
27 Number of pole pairs		2				
28 Magnet material		NdFeB				

Rated values for continuous operation						
29 Rated torque	M_N		0,363	0,313	0,444	mNm
30 Rated current (thermal limit)	I_N		0,16	0,0734	0,0558	A
31 Rated speed	n_N		2 500	2 500	2 500	min^{-1}

Note: Rated values are calculated with nominal voltage and at a 22°C ambient temperature. The R_{th2} value has been reduced by 0%.

Note:

The diagram indicates the recommended speed in relation to the available torque at the output shaft for a given ambient temperature of 22°C.

The diagram shows the motor in a completely insulated as well as thermally coupled condition (R_{th2} 50% reduced).

The nominal voltage (U_N) curve shows the operating point at nominal voltage in the insulated and thermally coupled condition. Any points of operation above the curve at nominal voltage will require a higher operating voltage. Any points below the nominal voltage curve will require less voltage.

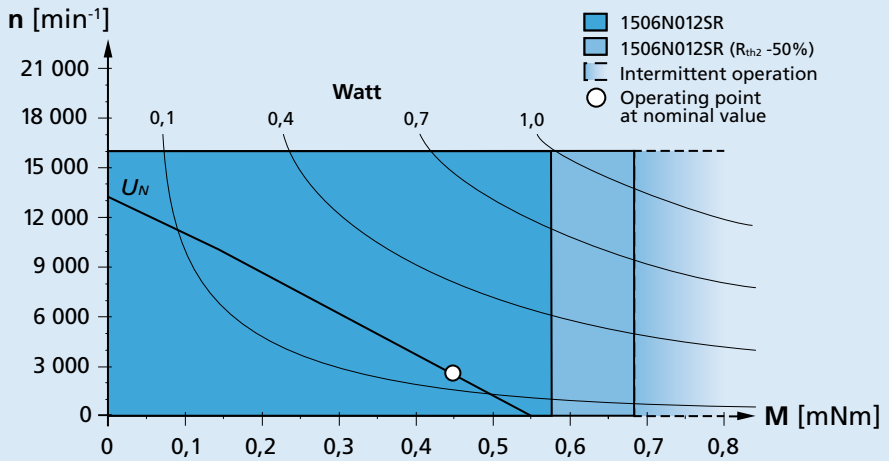

Recommended operation areas (example: nominal voltage 12V)

© DR. FRITZ FAULHABER GMBH & CO. KG
Specifications subject to change without notice.

Dimensional drawing

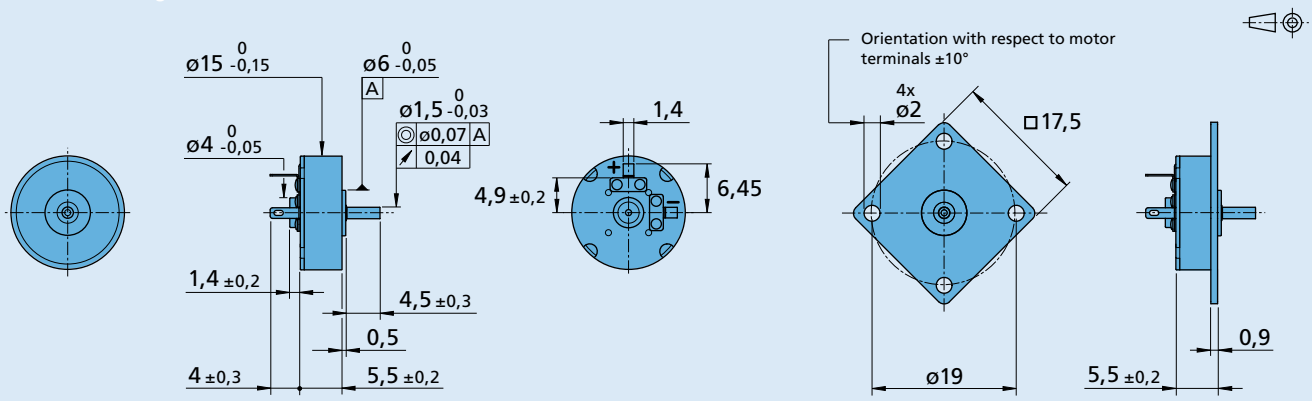

1506 N ... SR **1506 N ... SR X3697**

Options

Example product designation: **1506N012SR-3359**

Option	Type	Description
3327	Twin Leads	For motors with twin leads (PVC), length 70 mm, red (+) / black (-)
F	Single Leads	For motors with single leads (PTFE), length 150 mm, red (+) / black (-)
X3697	Flange	Square mounting flange (17,5 x 17,5 mm)
3359	Second shaft end	Length 4,5 mm

Product combination

Precision Gearheads / Lead Screws	Encoders	Drive Electronics	Cables / Accessories
		SC 1801 P SC 1801 S	To view our large range of accessory parts, please refer to the "Accessories" chapter.

For notes on technical data and lifetime performance refer to "Technical Information".

Backwards

© DR. FRITZ FAULHABER GMBH & CO. KG
Specifications subject to change without notice.

Flat DC-Micromotors

0,4 mNm

Precious Metal Commutation
with integrated Encoder

0,8 W

Series 1506 ... SR IE2-8

Values at 22°C and nominal voltage		1506 N	003 SR	006 SR	012 SR	IE2-8
1 Nominal voltage	U_N		3	6	12	V
2 Terminal resistance	R		10,4	50,5	130	Ω
3 Efficiency, max.	$\eta_{max.}$		68	66	70	%
4 No-load speed	n_0		13 400	14 300	15 500	min^{-1}
5 No-load current, typ. (with shaft ø 0,8 mm)	I_0		0,01	0,005	0,003	A
6 Stall torque	M_H		0,54	0,46	0,64	mNm
7 Friction torque	M_R		0,02	0,02	0,02	mNm
8 Speed constant	k_n		4 640	2 480	1 340	min^{-1}/V
9 Back-EMF constant	k_E		0,216	0,403	0,749	mV/min^{-1}
10 Torque constant	k_M		2,06	3,84	7,15	mNm/A
11 Current constant	k_I		0,486	0,26	0,14	A/mNm
12 Slope of n-M curve	$\Delta n/\Delta M$		24 700	31 400	24 200	min^{-1}/mNm
13 Rotor inductance	L		175	720	2 100	µH
14 Mechanical time constant	τ_m		24	30	23	ms
15 Rotor inertia	J		0,09	0,09	0,09	gcm^2
16 Angular acceleration	$\alpha_{max.}$		58	50	71	$\cdot 10^3 rad/s^2$
17 Thermal resistance	R_{th1} / R_{th2}	36 / 61				K/W
18 Thermal time constant	τ_{w1} / τ_{w2}	5,4 / 190				s
19 Operating temperature range:						
– motor		+0 ... +70				°C
– winding, max. permissible		+70				°C
20 Shaft bearings		sintered bearings				
21 Shaft load max.:						
– with shaft diameter		0,8				mm
– radial at 3 000 min^{-1} (3 mm from bearing)		0,5				N
– axial at 3 000 min^{-1}		0,1				N
– axial at standstill		10				N
22 Shaft play:						
– radial	≤	0,03				mm
– axial	≤	0,2				mm
23 Housing material		plastic				
24 Mass		7,1				g
25 Direction of rotation		clockwise, viewed from the front face				
26 Speed up to	$n_{max.}$	16 000				min^{-1}
27 Number of pole pairs		2				
28 Magnet material		NdFeB				
Rated values for continuous operation						
29 Rated torque	M_N		0,37	0,29	0,4	mNm
30 Rated current (thermal limit)	I_N		0,2	0,086	0,063	A
31 Rated speed	n_N		2 500	2 500	2 530	min^{-1}

Note: Rated values are calculated with nominal voltage and at a 22°C ambient temperature. The R_{th2} value has been reduced by 0%.

Note:

The diagram indicates the recommended speed in relation to the available torque at the output shaft for a given ambient temperature of 22°C.

The diagram shows the motor in a completely insulated as well as thermally coupled condition (R_{th2} 50% reduced).

The nominal voltage (U_N) curve shows the operating point at nominal voltage in the insulated and thermally coupled condition. Any points of operation above the curve at nominal voltage will require a higher operating voltage. Any points below the nominal voltage curve will require less voltage.

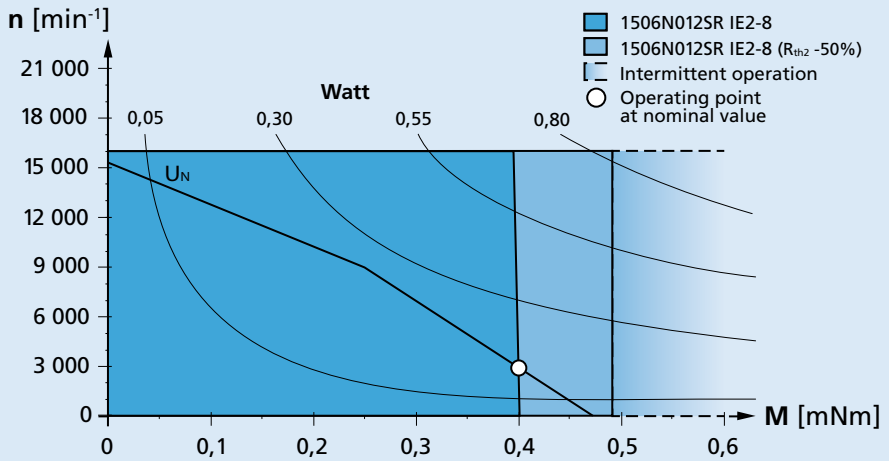

Recommended operation areas (example: nominal voltage 12V)

© DR. FRITZ FAULHABER GMBH & CO. KG
Specifications subject to change without notice.

Dimensional drawing

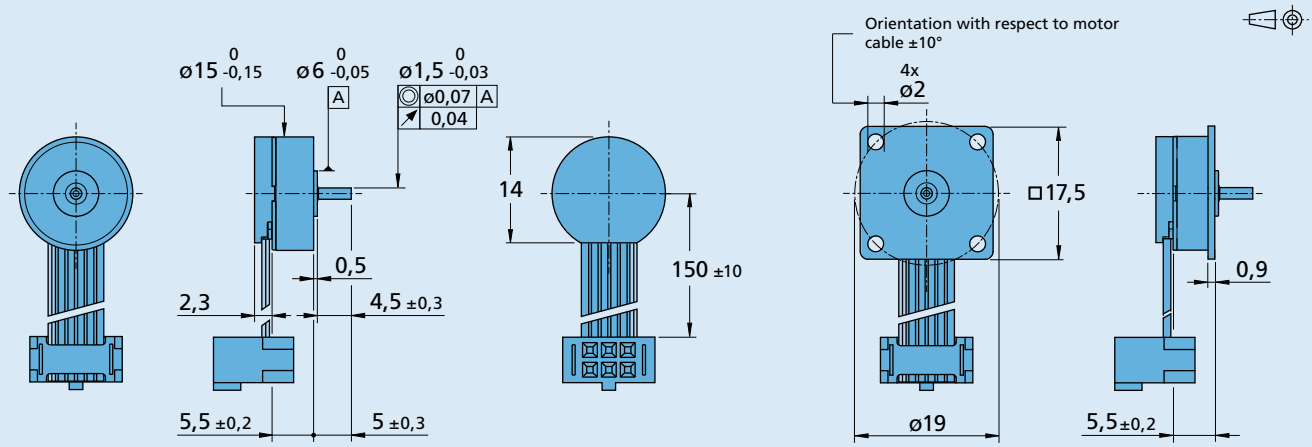

1506 N ... SR IE2-8 **1506 N ... SR IE2-8 X3697**

Integrated optical Encoder		IE2-8	
Lines per revolution	*N*	8	
Signal output, square wave		2	Channel
Supply voltage	U_{DD}	3,2 ... 5,5	V DC
Current consumption, typical (U_{DD} = 5 V DC)	I_{DD}	typ. 8, max. 15	mA
Output current, max. allowable (at U_{out} < 1,5V)	I_{OUT}	5	mA
Pulse width [1]	*P*	180 ± 45	°e
Phase shift, channal A to B [1]	*Φ*	90 ± 45	°e
Signal rise/fall time, max. (C_{LOAD} = 50 pF)	*tr/tf*	2,5 / 0,3	µs
Frequency range [2], up to	*f*	4,5	kHz

[1] Ambient temperature 22°C (tested at 1kHz)
[2] Velocity (min^{-1}) = f (Hz) x 60/N

Features

In this version, the DC-Micromotors have an optical encoder with two output channels. A code wheel on the shaft is optically captured and further processed. At the encoder outputs, two 90° phase-shifted rectangular signals are available with 8 impulses per motor revolution.

The encoder is suitable for the monitoring and regulation of the speed and direction of rotation and for positioning the drive shaft.

The supply voltage for the encoder and the DC-Micromotor as well as the two channel output signals are interfaced through a ribbon cable with connector.

Full product description
Examples:

1506N003SR IE2-8
1506N012SR IE2-8

Output signals / Circuit diagram / Connector information

Output signals
with clockwise rotation as seen from the shaft end

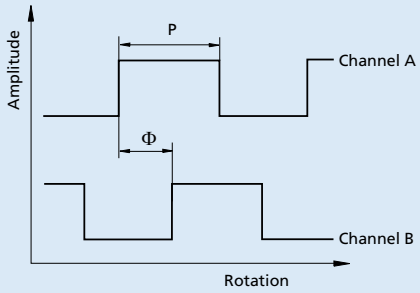

Admissible deviation of phase shift:

$$\Delta\Phi = \left| 90° - \frac{\Phi}{P} * 180° \right| \leq 45°$$

Output circuit

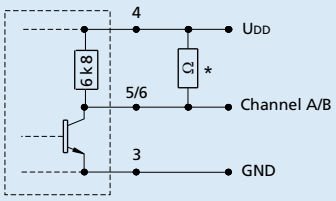

* An additional external pull-up resistor can be added to improve the rise time. Caution: I_{OUT} max. 5 mA must not be exceeded!

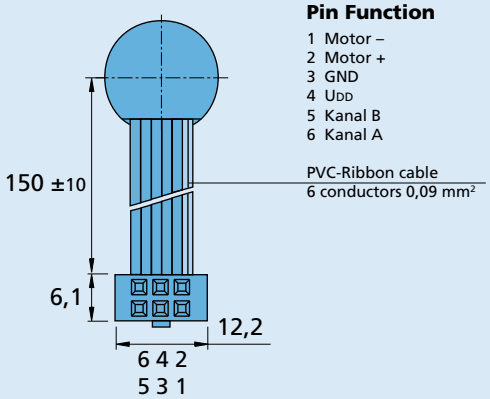

Pin Function

1 Motor –
2 Motor +
3 GND
4 UDD
5 Kanal B
6 Kanal A

Connector
EN 60603-13 / DIN-41651.
grid 2,54 mm

© DR. FRITZ FAULHABER GMBH & CO. KG
Specifications subject to change without notice.
www.faulhaber.com

DC-Gearmotors 30 mNm

Precious Metal Commutation

Series 1512 ... SR

Values at 22°C and nominal voltage	1512 U		003 SR	006 SR	012 SR	
Nominal voltage	U_N		3	6	12	Volt
Terminal resistance	R		13,6	60,5	156	Ω
No-load speed (motor)	n_o		11 200	11 800	12 900	min^{-1}
Speed constant	k_n		3 880	2 050	1 110	min^{-1}/V
Back-EMF constant	k_E		0,258	0,487	0,904	mV/min^{-1}
Torque constant	k_M		2,46	4,65	8,63	mNm/A
Current constant	k_I		0,406	0,215	0,116	A/mNm
Slope of n-M curve	$\Delta n/\Delta M$		21 500	26 700	20 000	min^{-1}/mNm
Rotor inductance	L		275	1 160	3 550	µH
Rotor inertia	J		0,08	0,08	0,08	gcm^2

Housing material		plastic	
Geartrain material		metal	
Backlash, at no-load	≤	4	°
Bearings on output shaft		plastic / brass bearing	
Shaft load max.:			
– radial (5 mm from mounting face)	≤	1,4	N
– axial	≤	1	N
Shaft press fit force, max.	≤	15	N
Shaft play:			
– radial (5 mm from mounting face)	≤	0,08	mm
– axial	≤	0,25	mm
Operating temperature range		– 25 ... + 80	°C

Specifications

reduction ratio (rounded)	output speed up to n_{max} min^{-1}	weight with motor g	output torque continuous operation M_{max} mNm	output torque intermittent operation M_{max} mNm	direction of rotation (reversible)	efficiency %
6 : 1	779	6,9	1,4	3	=	81
13 : 1	372	7,0	2,8	5	≠	73
39 : 1	129	7,2	7,0	10	=	60
112 : 1	45	7,4	19,8	30	≠	59
324 : 1	15	7,7	30,0	50	=	53

Note: output speed at 5000 min^{-1} input speed. Based on motor 1506 ... SR.

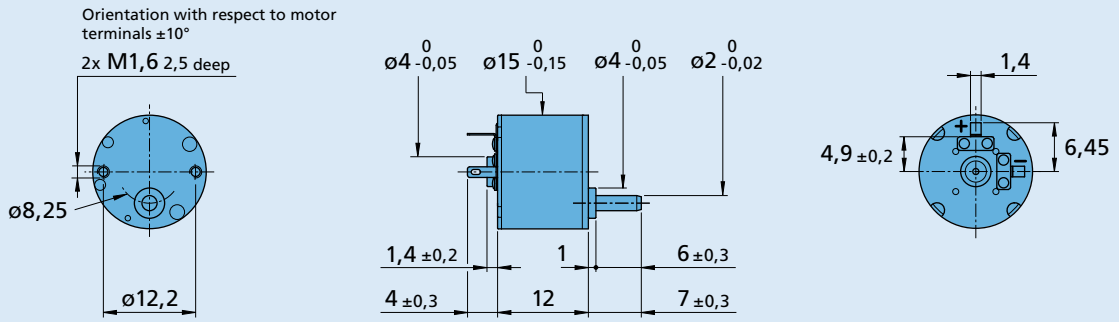

1512 U ... SR

© DR. FRITZ FAULHABER GMBH & CO. KG
Specifications subject to change without notice.
www.faulhaber.com

DC-Gearmotors

Precious Metal Commutation
with integrated Encoder

30 mNm

For combination with
Drive Electronics:
Speed Controller

Series 1512 ... SR ... IE2-8

Values at 22°C and nominal voltage	1512 U		003 SR	006 SR	012 SR	IE2-8
Nominal voltage	U_N		3	6	12	Volt
Terminal resistance	R		10,4	50,5	130	Ω
No-load speed (motor)	n_o		13 400	14 300	15 500	min^{-1}
Speed constant	k_n		4 640	2 480	1 340	min^{-1}/V
Back-EMF constant	k_E		0,216	0,403	0,749	mV/min^{-1}
Torque constant	k_M		2,06	3,84	7,15	mNm/A
Current constant	k_I		0,486	0,260	0,140	A/mNm
Slope of n-M curve	$\Delta n/\Delta M$		24 700	31 400	24 200	min^{-1}/mNm
Rotor inductance	L		175	720	2 100	µH
Rotor inertia	J		0,09	0,09	0,09	gcm^2

Housing material		plastic	
Geartrain material		metal	
Backlash, at no-load	≤	4	°
Bearings on output shaft		plastic / brass bearing	
Shaft load max.:			
– radial (5 mm from mounting face)	≤	1,4	N
– axial	≤	1	N
Shaft press fit force, max.	≤	15	N
Shaft play:			
– radial (5 mm from mounting face)	≤	0,08	mm
– axial	≤	0,25	mm
Operating temperature range		0 ... + 70	°C

Specifications

reduction ratio (rounded)	output speed up to n_{max} min^{-1}	weight with motor g	output torque continuous operation M_{max} mNm	output torque intermittent operation M_{max} mNm	direction of rotation (reversible)	efficiency %
6 : 1	779	6,9	1,4	3	=	81
13 : 1	372	7,0	2,8	5	≠	73
39 : 1	129	7,2	7,0	10	=	60
112 : 1	45	7,4	19,8	30	≠	59
324 : 1	15	7,7	30,0	50	=	53

Note: output speed at 5000 min^{-1} input speed. Based on motor 1506 ... SR.

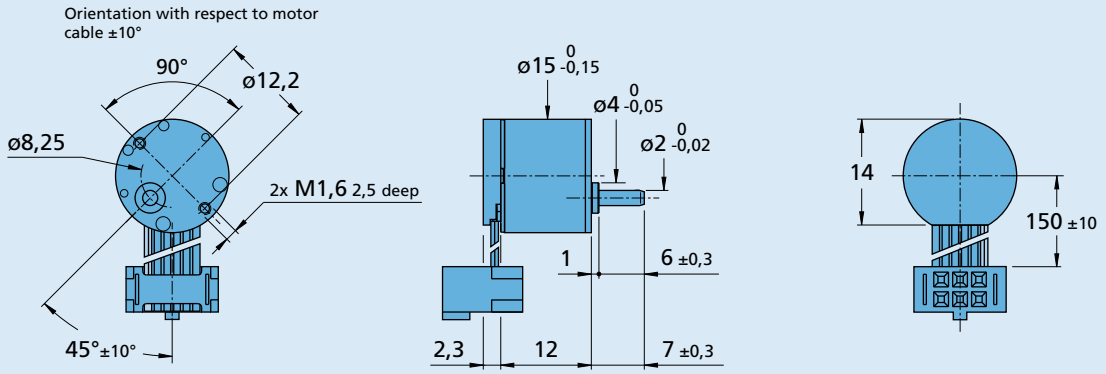

1512 U ... SR ... IE2-8

For notes on technical data and lifetime performance refer to "Technical Information".
Edition 2020 Feb. 18

© DR. FRITZ FAULHABER GMBH & CO. KG
Specifications subject to change without notice.
www.faulhaber.com

Integrated optical Encoder		IE2-8	
Lines per revolution	N	8	
Signal output, square wave		2	channels
Supply voltage	U_{DD}	3,2 ... 5,5	V DC
Current consumption, typical (U_{DD} = 5 V DC)	I_{DD}	typ. 8, max. 15	mA
Output current, max. allowable (at U_{out} < 1,5V)	I_{OUT}	5	mA
Pulse width [1]	P	180 ± 45	°e
Phase shift, channal A to B [1]	Φ	90 ± 45	°e
Signal rise/fall time, max. (C_{LOAD} = 50 pF)	tr/tf	2,5 / 0,3	µs
Frequency range [2], up to	f	4,5	kHz

[1] Ambient temperature 22°C (tested at 1kHz)
[2] Velocity (min^{-1}) = f (Hz) x 60/N

Features

In this version, the DC-Micromotors have an optical encoder with two output channels. A code wheel on the shaft is optically captured and further processed. At the encoder outputs, two 90° phase-shifted rectangular signals are available with 8 impulses per motor revolution.

The encoder is suitable for the monitoring and regulation of the speed and direction of rotation and for positioning the drive shaft.

The supply voltage for the encoder and the DC-Micromotor as well as the two channel output signals are interfaced through a ribbon cable with connector.

Full product description

- Examples:

  1512U003SR 6:1 IE2-8

  1512U012SR 324:1 IE2-8

Output signals / Circuit diagram / Connector information

Output signals
with clockwise rotation as seen from the shaft end

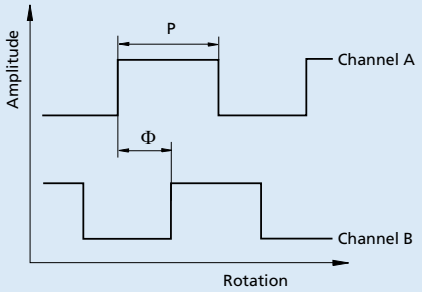

Admissible deviation of phase shift:

$$\Delta\Phi = \left| 90° - \frac{\Phi}{P} * 180° \right| \leq 45°$$

Output circuit

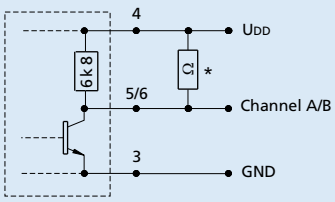

* An additional external pull-up resistor can be added to improve the rise time. Caution: I_{OUT} max. 5 mA must not be exceeded!

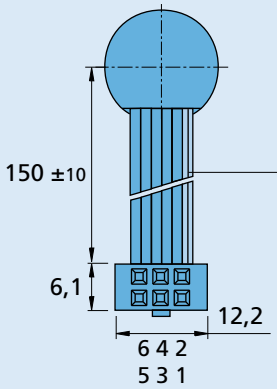

Pin Function

1 Motor –
2 Motor +
3 GND
4 U_{DD}
5 Kanal B
6 Kanal A

PVC-Ribbon cable
6 conductors 0,09 mm²

Connector
EN 60603-13 / DIN-41651.
grid 2,54 mm

© DR. FRITZ FAULHABER GMBH & CO. KG
Specifications subject to change without notice.
www.faulhaber.com

Flat DC-Micromotors 3,4 mNm

Precious Metal Commutation 4 W

Series 2607 ... SR

Values at 22°C and nominal voltage		2607 T	006 SR	012 SR	024 SR	
1 Nominal voltage	U_N		6	12	24	V
2 Terminal resistance	R		8,2	36,5	128	Ω
3 Efficiency, max.	$\eta_{max.}$		81	80	81	%
4 No-load speed	n_0		6 600	5 900	6 200	min⁻¹
5 No-load current, typ. (with shaft ø 1,5 mm)	I_0		0,007	0,004	0,002	A
6 Stall torque	M_H		6,26	6,21	6,77	mNm
7 Friction torque	M_R		0,06	0,07	0,07	mNm
8 Speed constant	k_n		1 111	500	261	min⁻¹/V
9 Back-EMF constant	k_E		0,9	2	3,83	mV/min⁻¹
10 Torque constant	k_M		8,59	19,09	36,54	mNm/A
11 Current constant	k_I		0,116	0,052	0,027	A/mNm
12 Slope of n-M curve	$\Delta n/\Delta M$		1 055	957	917	min⁻¹/mNm
13 Rotor inductance	L		465	2 200	8 400	µH
14 Mechanical time constant	τ_m		7,5	6,8	6,5	ms
15 Rotor inertia	J		0,68	0,68	0,68	gcm²
16 Angular acceleration	$\alpha_{max.}$		92	92	100	·10³rad/s²
17 Thermal resistance	R_{th1} / R_{th2}	2,7 / 24,45				K/W
18 Thermal time constant	τ_{w1} / τ_{w2}	1,8 / 163				s
19 Operating temperature range:						
– motor		-25 ... +80				°C
– winding, max. permissible		+100				°C
20 Shaft bearings		sintered bearings	ball bearings, preloaded			
21 Shaft load max.:		(standard)	(optional version)			
– with shaft diameter		1,5	1,5			mm
– radial at 3 000 min⁻¹ (3 mm from bearing)		1,2	5			N
– axial at 3 000 min⁻¹		0,2	0,5			N
– axial at standstill		20	10			N
22 Shaft play:						
– radial	≤	0,03	0,015			mm
– axial	≤	0,2	0			mm
23 Housing material		plastic				
24 Mass		16,1				g
25 Direction of rotation		clockwise, viewed from the front face				
26 Speed up to	$n_{max.}$	8 000				min⁻¹
27 Number of pole pairs		2				
28 Magnet material		NdFeB				
Rated values for continuous operation						
29 Rated torque	M_N		3,2	3,1	3,4	mNm
30 Rated current (thermal limit)	I_N		0,4	0,17	0,1	A
31 Rated speed	n_N		2 500	2 500	2 500	min⁻¹

Note: Rated values are calculated with nominal voltage and at a 22°C ambient temperature. The R_{th2} value has been reduced by 0%.

Note:

The diagram indicates the recommended speed in relation to the available torque at the output shaft for a given ambient temperature of 22°C.

The diagram shows the motor in a completely insulated as well as thermally coupled condition (R_{th2} 50% reduced).

The nominal voltage (U_N) curve shows the operating point at nominal voltage in the insulated and thermally coupled condition. Any points of operation above the curve at nominal voltage will require a higher operating voltage. Any points below the nominal voltage curve will require less voltage.

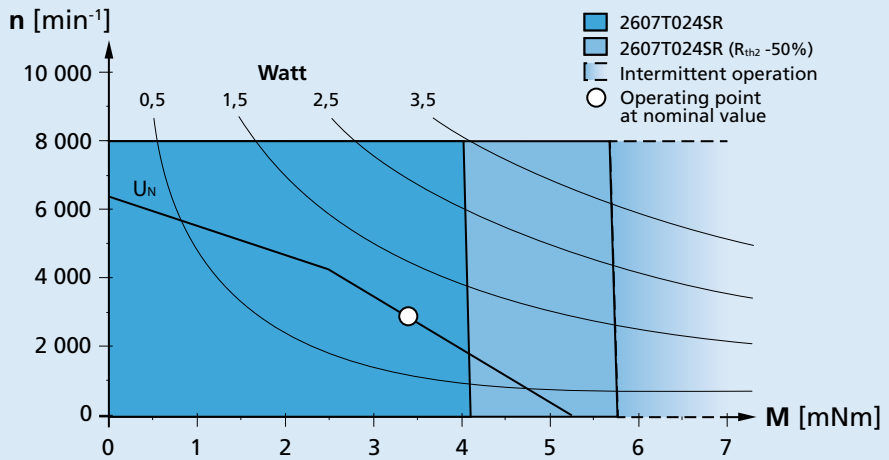

Recommended operation areas (example: nominal voltage 24V)

© DR. FRITZ FAULHABER GMBH & CO. KG
Specifications subject to change without notice.

Dimensional drawing

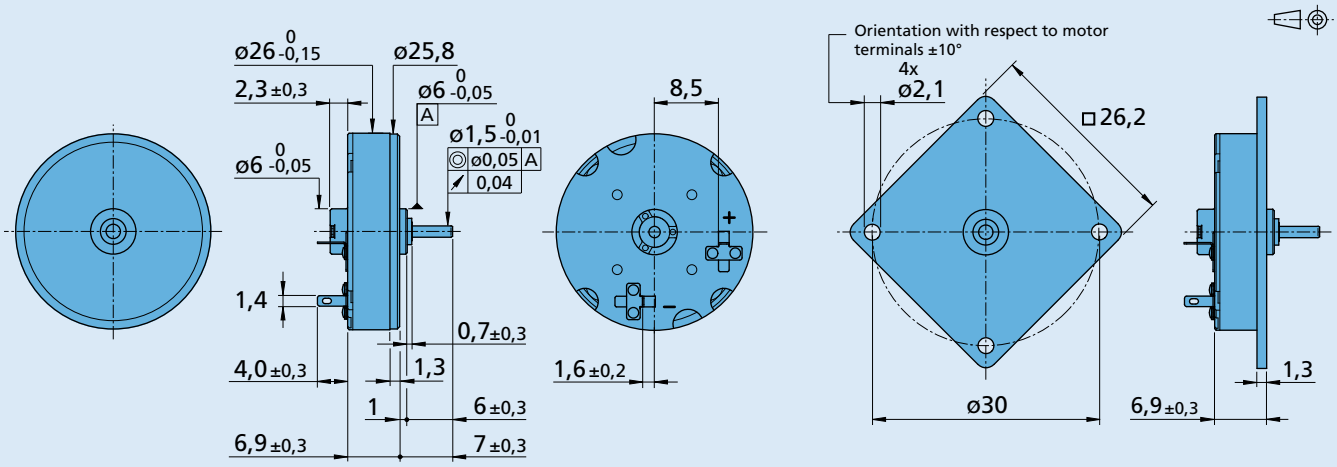

2607 T ... SR **2607 T ... SR 3697**

Options

Example product designation: **2607T012SR-3327**

Option	Type	Description
3327	Twin Leads	For motors with twin leads (PVC), length 70 mm, red (+) / black (-)
F	Single Leads	For motors with single leads (PTFE), length 150 mm, red (+) / black (-)
3697	Flange	Square mounting flange (26,2 x 26,2 mm)
H414	Bearing	Motor with preloaded ball bearings
3754	Second shaft end	Length 5 mm

Product combination

Precision Gearheads / Lead Screws	Encoders	Drive Electronics	Cables / Accessories
		SC 1801 P SC 1801 S	To view our large range of accessory parts, please refer to the "Accessories" chapter.

© DR. FRITZ FAULHABER GMBH & CO. KG
Specifications subject to change without notice.

Flat DC-Micromotors

2,9 mNm

Precious Metal Commutation
with integrated Encoder

3 W

Series 2607 ... SR IE2-16

Values at 22°C and nominal voltage	2607 T		006 SR	012 SR	024 SR	IE2-16
1 Nominal voltage	U_N		6	12	24	V
2 Terminal resistance	R		8	31,2	118,6	Ω
3 Efficiency, max.	$\eta_{max.}$		80	80	80	%
4 No-load speed	n_0		6 700	6 900	7 200	min^{-1}
5 No-load current, typ. (with shaft ø 1,5 mm)	I_0		0,01	0,005	0,0025	A
6 Stall torque	M_H		6,33	6,31	6,48	mNm
7 Friction torque	M_R		0,08	0,08	0,08	mNm
8 Speed constant	k_n		1 130	582	304	min^{-1}/V
9 Back-EMF constant	k_E		0,884	1,72	3,29	mV/min^{-1}
10 Torque constant	k_M		8,44	16,4	31,4	mNm/A
11 Current constant	k_I		0,118	0,061	0,032	A/mNm
12 Slope of n-M curve	$\Delta n/\Delta M$		1 060	1 090	1 110	min^{-1}/mNm
13 Rotor inductance	L		420	1 600	5 800	µH
14 Mechanical time constant	τ_m		7,5	7,8	7,9	ms
15 Rotor inertia	J		0,68	0,68	0,68	gcm^2
16 Angular acceleration	$\alpha_{max.}$		94	93	95	$\cdot 10^3 rad/s^2$
17 Thermal resistance	R_{th1} / R_{th2}	10 / 32				K/W
18 Thermal time constant	τ_{w1} / τ_{w2}	6 / 250				s
19 Operating temperature range:						
– motor		+0 ... +70				°C
– winding, max. permissible		+70				°C
20 Shaft bearings		sintered bearings	ball bearings, preloaded			
21 Shaft load max.:		(standard)	(optional version)			
– with shaft diameter		1,5	1,5			mm
– radial at 3 000 min^{-1} (3 mm from bearing)		1,2	5			N
– axial at 3 000 min^{-1}		0,2	0,5			N
– axial at standstill		20	10			N
22 Shaft play:						
– radial	≤	0,03	0,015			mm
– axial	≤	0,2	0			mm
23 Housing material		plastic				
24 Mass		18,6				g
25 Direction of rotation		clockwise, viewed from the front face				
26 Speed up to	$n_{max.}$	8 000				min^{-1}
27 Number of pole pairs		2				
28 Magnet material		NdFeB				

Rated values for continuous operation						
29 Rated torque	M_N		3	2,9	2,9	mNm
30 Rated current (thermal limit)	I_N		0,39	0,2	0,1	A
31 Rated speed	n_N		2 620	2 760	3 010	min^{-1}

Note: Rated values are calculated with nominal voltage and at a 22°C ambient temperature. The R_{th2} value has been reduced by 0%.

Note:

The diagram indicates the recommended speed in relation to the available torque at the output shaft for a given ambient temperature of 22°C.

The diagram shows the motor in a completely insulated as well as thermally coupled condition (R_{th2} 50% reduced).

The nominal voltage (U_N) curve shows the operating point at nominal voltage in the insulated and thermally coupled condition. Any points of operation above the curve at nominal voltage will require a higher operating voltage. Any points below the nominal voltage curve will require less voltage.

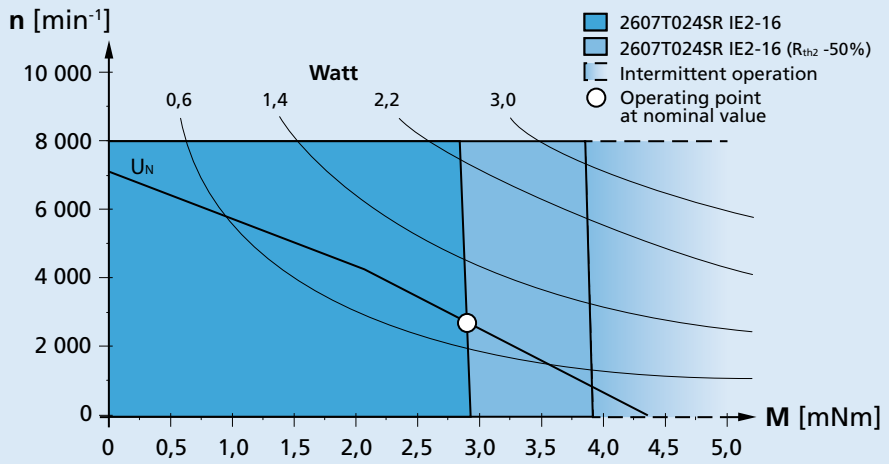

Recommended operation areas (example: nominal voltage 24V)

For notes on technical data and lifetime performance refer to "Technical Information".

Edition 2020 Feb. 18

Backwards

© DR. FRITZ FAULHABER GMBH & CO. KG
Specifications subject to change without notice.

www.faulhaber.com

Dimensional drawing

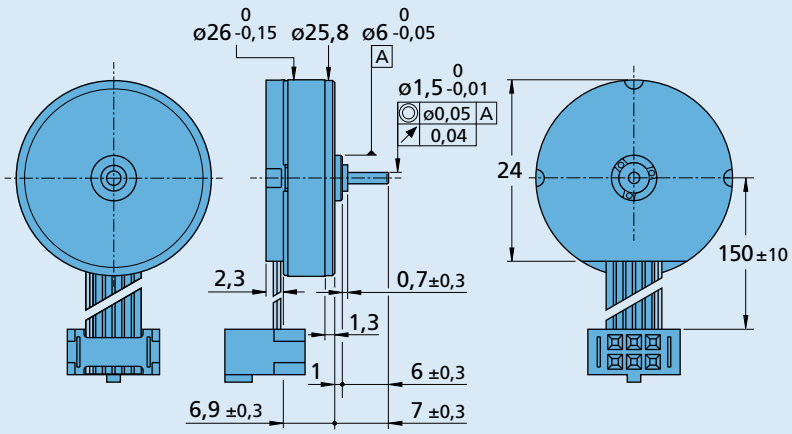

2607 T ... SR IE2-16

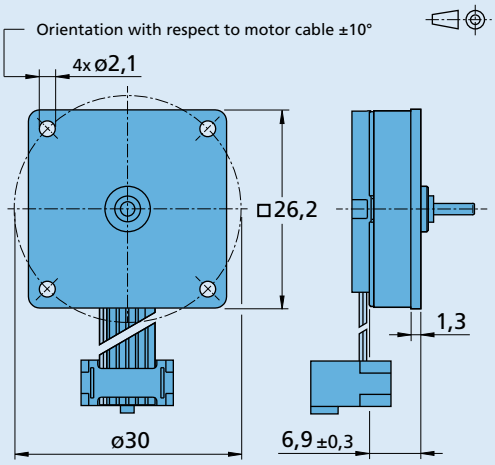

2607 T ... SR IE2-16 3697

Integrated optical Encoder

Lines per revolution	*N*	16	
Signal output, square wave		2	Channel
Supply voltage	U_{DD}	3,2 ... 5,5	V DC
Current consumption, typical (U_{DD} = 5 V DC)	I_{DD}	typ. 8, max. 15	mA
Output current, max. allowable (at U_{out} < 1,5V)	I_{OUT}	5	mA
Pulse width [1]	*P*	180 ± 45	°e
Phase shift, channal A to B [1]	*Φ*	90 ± 45	°e
Signal rise/fall time, max. (C_{LOAD} = 50 pF)	*tr/tf*	2,5 / 0,3	µs
Frequency range [2], up to	*f*	4,5	kHz

[1] Ambient temperature 22°C (tested at 1kHz)
[2] Velocity (min^{-1}) = f (Hz) x 60/N

Features

In this version, the DC-Micromotors have an optical encoder with two output channels. A code wheel on the shaft is optically captured and further processed. At the encoder outputs, two 90° phase-shifted rectangular signals are available with 16 impulses per motor revolution.

The encoder is suitable for the monitoring and regulation of the speed and direction of rotation and for positioning the drive shaft.

The supply voltage for the encoder and the DC-Micromotor as well as the two channel output signals are interfaced through a ribbon cable with connector.

Full product description
Examples:

2607T006SR IE2-16

2607T024SR IE2-16

Output signals / Circuit diagram / Connector information

Output signals
with clockwise rotation as seen from the shaft end

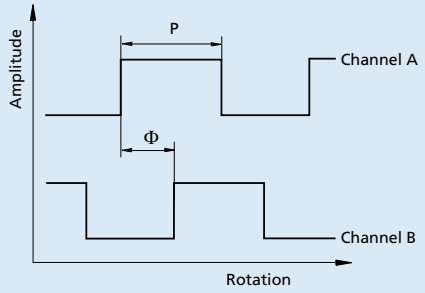

Admissible deviation of phase shift:

$$\Delta\Phi = \left| 90° - \frac{\Phi}{P} * 180° \right| \leq 45°$$

Output circuit

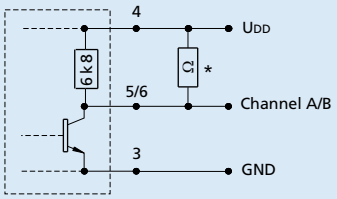

* An additional external pull-up resistor can be added to improve the rise time. Caution: I_{OUT} max. 5 mA must not be exceeded!

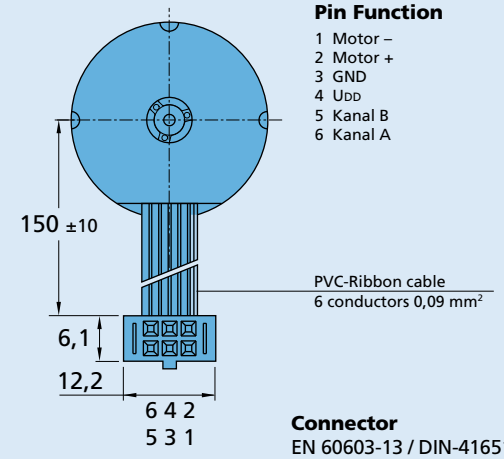

Pin Function

1 Motor –
2 Motor +
3 GND
4 U_{DD}
5 Kanal B
6 Kanal A

Connector
EN 60603-13 / DIN-41651.
grid 2,54 mm

© DR. FRITZ FAULHABER GMBH & CO. KG
Specifications subject to change without notice.
www.faulhaber.com

DC-Gearmotors 100 mNm

Precious Metal Commutation

Series 2619 ... SR

Values at 22°C and nominal voltage	2619 S		006 SR	012 SR	024 SR	
Nominal voltage	U_N		6	12	24	Volt
Terminal resistance	R		8,2	36,5	128	Ω
No-load speed (motor)	n_o		6 600	5 900	6 200	min^{-1}
Speed constant	k_n		1 111	500	261	min^{-1}/V
Back-EMF constant	k_E		0,9	2	3,83	mV/min^{-1}
Torque constant	k_M		8,59	19,09	36,54	mNm/A
Current constant	k_I		0,116	0,052	0,027	A/mNm
Slope of n-M curve	$\Delta n/\Delta M$		1 055	957	917	min^{-1}/mNm
Rotor inductance	L		465	2 200	8 400	µH
Rotor inertia	J		0,68	0,68	0,68	gcm^2

Housing material		plastic		
Geartrain material		metal		
Backlash, at no-load	≤	4		°
Bearings on output shaft		brass / ceramic bearings (standard)	ball bearings, preloaded (optional)	
Shaft load max.:				
– radial (5 mm from mounting face)	≤	3,5	10,5	N
– axial	≤	2	5	N
Shaft press fit force, max.	≤	10	10	N
Shaft play:				
– radial (5 mm from mounting face)	≤	0,07	0,03	mm
– axial	≤	0,25	0	mm
Operating temperature range		– 25 ... + 80		°C

Specifications

reduction ratio (rounded)	output speed up to n_{max} min^{-1}	weight with motor g	output torque continuous operation M_{max} mNm	output torque intermittent operation M_{max} mNm	direction of rotation (reversible)	efficiency %
8 : 1	635	25	9	30	=	81
22 : 1	223	26	23	75	≠	73
33 : 1	151	26	30	100	=	66
112 : 1	44	27	93	180	≠	59
207 : 1	24	27	100	180	=	53
361 : 1	14	27	100	180	=	53
814 : 1	6	28	100	180	=	43
1 257 : 1	4	29	100	180	=	43

Note: output speed at 5000 min^{-1} input speed. Based on motor 2607 ... SR.

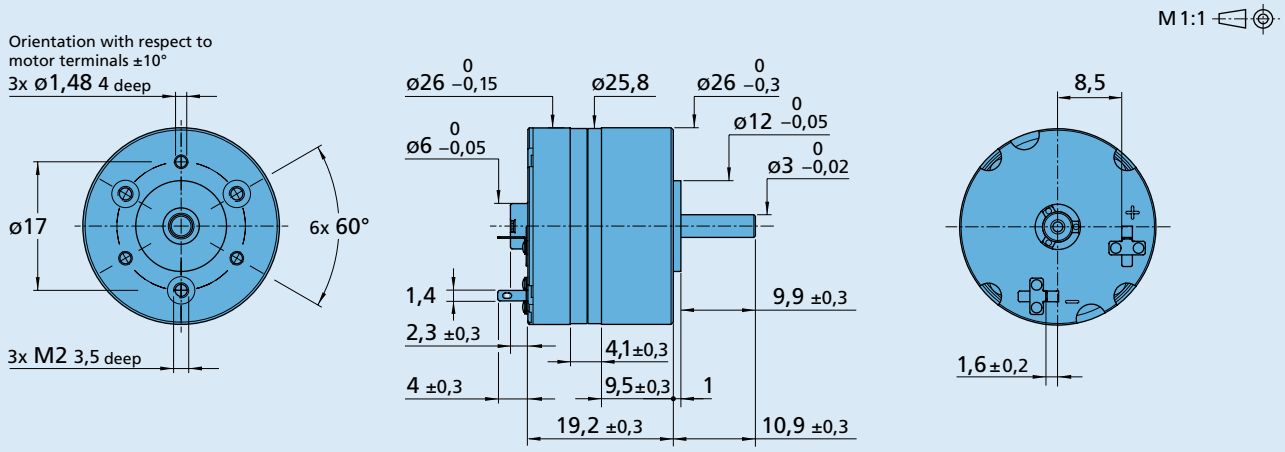

2619 S

© DR. FRITZ FAULHABER GMBH & CO. KG
Specifications subject to change without notice.
www.faulhaber.com

DC-Gearmotors

Precious Metal Commutation with integrated Encoder

100 mNm

For combination with
Drive Electronics:
Speed Controller

Series 2619 ... SR ... IE2-16

Values at 22°C and nominal voltage	2619 S	006 SR	012 SR	024 SR	IE2-16
Nominal voltage	U_N	6	12	24	Volt
Terminal resistance	R	8	31,2	118,6	Ω
No-load speed (motor)	n_o	6 700	6 900	7 200	min^{-1}
Speed constant	k_n	1 130	582	304	min^{-1}/V
Back-EMF constant	k_E	0,884	1,72	3,29	mV/min^{-1}
Torque constant	k_M	8,44	16,4	31,4	mNm/A
Current constant	k_I	0,118	0,061	0,032	A/mNm
Slope of n-M curve	$\Delta n/\Delta M$	1 060	1 090	1 110	min^{-1}/mNm
Rotor inductance	L	420	1 600	5 800	µH
Rotor inertia	J	0,68	0,68	0,68	gcm^2

Housing material		plastic		
Geartrain material		metal		
Backlash, at no-load	≤	4		°
Bearings on output shaft		brass / ceramic bearings (standard)	ball bearings, preloaded (optional)	
Shaft load max.:				
– radial (5 mm from mounting face)	≤	3,5	10,5	N
– axial	≤	2	5	N
Shaft press fit force, max.	≤	10	10	N
Shaft play:				
– radial (5 mm from mounting face)	≤	0,07	0,03	mm
– axial	≤	0,25	0	mm
Operating temperature range		0 ... + 70		°C

Specifications

reduction ratio (rounded)	output speed up to n_{max} min^{-1}	weight with motor g	output torque continuous operation M_{max} mNm	output torque intermittent operation M_{max} mNm	direction of rotation (reversible)	efficiency %
8 : 1	635	25	9	30	=	81
22 : 1	223	26	23	75	≠	73
33 : 1	151	26	30	100	=	66
112 : 1	44	27	93	180	≠	59
207 : 1	24	27	100	180	=	53
361 : 1	14	27	100	180	=	53
814 : 1	6	28	100	180	=	43
1 257 : 1	4	29	100	180	=	43

Note: output speed at 5000 min^{-1} input speed. Based on motor 2607 ... SR.

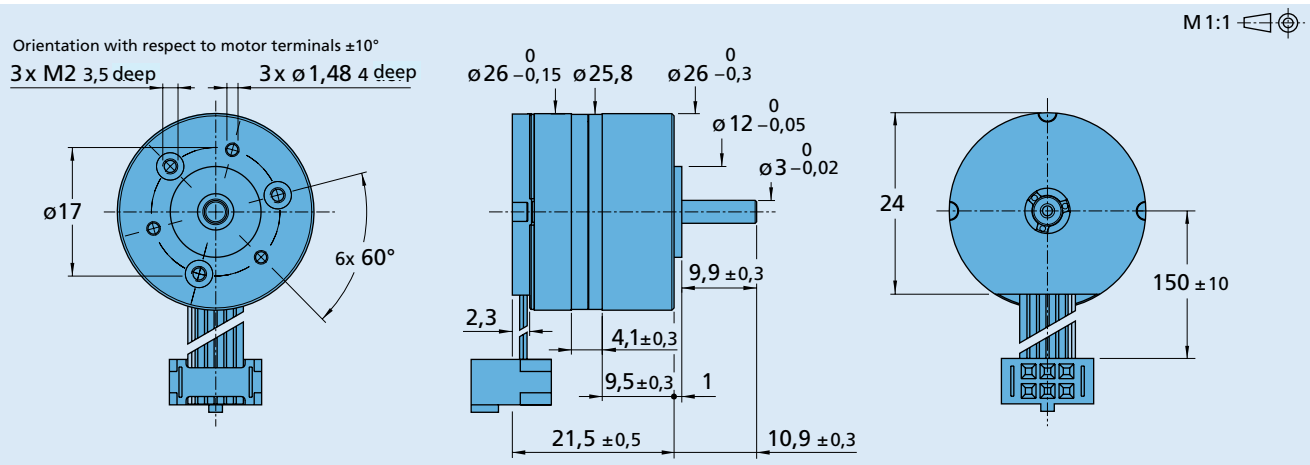

2619S ... SR ... IE2-16

For notes on technical data and lifetime performance refer to "Technical Information".
Edition 2020 Feb. 18

Backwards

© DR. FRITZ FAULHABER GMBH & CO. KG
Specifications subject to change without notice.
www.faulhaber.com

Integrated optical Encoder		IE2-16	
Lines per revolution	N	16	
Signal output, square wave		2	channels
Supply voltage	U_{DD}	3,2 ... 5,5	V DC
Current consumption, typical (U_{DD} = 5 V DC)	I_{DD}	typ. 8, max. 15	mA
Output current, max. allowable (at U_{out} < 1,5V)	I_{OUT}	5	mA
Pulse width [1]	P	180 ± 45	°e
Phase shift, channal A to B [1]	Φ	90 ± 45	°e
Signal rise/fall time, max. (C_{LOAD} = 50 pF)	tr/tf	2,5 / 0,3	µs
Frequency range [2], up to	f	4,5	kHz

[1] Ambient temperature 22°C (tested at 1kHz)
[2] Velocity (min^{-1}) = f (Hz) x 60/N

Features

In this version, the DC-Micromotors have an optical encoder with two output channels. A code wheel on the shaft is optically captured and further processed. At the encoder outputs, two 90° phase-shifted rectangular signals are available with 16 impulses per motor revolution.

The encoder is suitable for the monitoring and regulation of the speed and direction of rotation and for positioning the drive shaft.

The supply voltage for the encoder and the DC-Micromotor as well as the two channel output signals are interfaced through a ribbon cable with connector.

Full product description

- Examples:

  2619S006SR 8:1 IE2-16

  2619S024SR 1257:1 IE2-16

Output signals / Circuit diagram / Connector information

Output signals
with clockwise rotation as seen from the shaft end

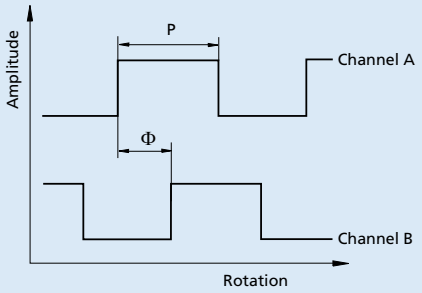

Admissible deviation of phase shift:

$$\Delta\Phi = \left| 90° - \frac{\Phi}{P} * 180° \right| \leq 45°$$

Output circuit

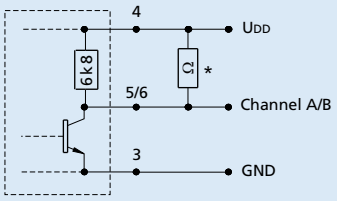

* An additional external pull-up resistor can be added to improve the rise time. Caution: I_{OUT} max. 5 mA must not be exceeded!

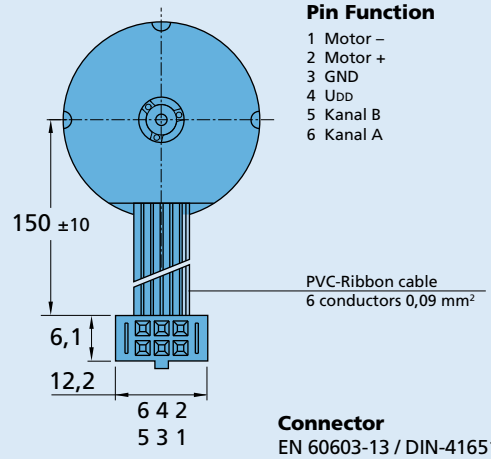

Pin Function

1 Motor –
2 Motor +
3 GND
4 U_{DD}
5 Kanal B
6 Kanal A

Connector
EN 60603-13 / DIN-41651.
grid 2,54 mm

© DR. FRITZ FAULHABER GMBH & CO. KG
Specifications subject to change without notice.
www.faulhaber.com

FAULHABER B-Micro

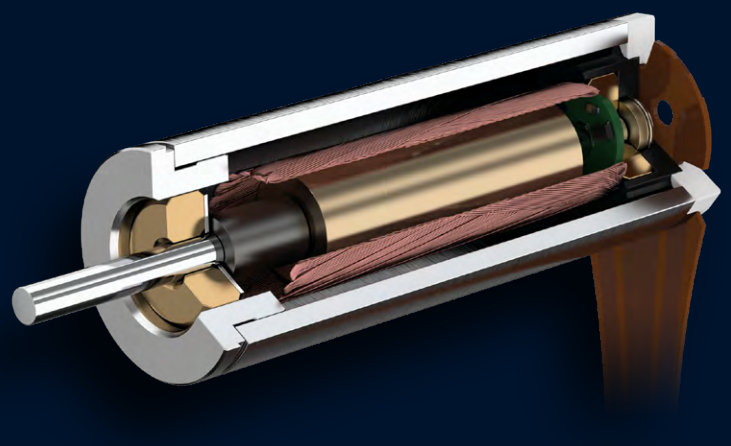

FAULHABER B-Micro

0308...B	sensorless	18 µNm
0515...B	sensorless	0.13 mNm

Backwards

Brushless DC-Servomotors 18 µNm

2 Pole Technology, sensorless 0,065 W

Series 0308 ... B

Values at 22°C and nominal voltage		0308 H	003 B	
1 Nominal voltage	U_N		3	V
2 Terminal resistance, phase-phase	R		34	Ω
3 Efficiency, max.	$\eta_{max.}$		20	%
4 No-load speed	n_0		61 000	min^{-1}
5 No-load current, typ. (with shaft ø 0,6 mm)	I_0		0,027	A
6 Stall torque	M_H		0,026	mNm
7 Friction torque, static	C_0		$1{,}77 \cdot 10^{-3}$	mNm
8 Friction torque, dynamic	C_V		$1{,}09 \cdot 10^{-7}$	mNm/min^{-1}
9 Speed constant	k_n		29 800	min^{-1}/V
10 Back-EMF constant	k_E		0,033	mV/min^{-1}
11 Torque constant	k_M		0,32	mNm/A
12 Current constant	k_I		3,12	A/mNm
13 Slope of n-M curve	$\Delta n/\Delta M$		$3{,}2 \cdot 10^6$	min^{-1}/mNm
14 Terminal inductance, phase-phase	L		60	µH
15 Mechanical time constant	τ_m		7	ms
16 Rotor inertia	J		$2 \cdot 10^{-4}$	gcm^2
17 Angular acceleration	$\alpha_{max.}$		1 323	$\cdot 10^3 rad/s^2$
18 Thermal resistance	R_{th1} / R_{th2}	60 / 300		K/W
19 Thermal time constant	τ_{w1} / τ_{w2}	0,5 / 45		s
20 Operating temperature range:				
– motor		-30 ... +60		°C
– winding, max. permissible		+60		°C
21 Shaft bearings		ruby bearings		
22 Shaft load max.:				
– with shaft diameter		0,6		mm
– radial at 3 000 min^{-1} (1 mm from mounting flange)		0,2		N
– axial at 3 000 min^{-1} (push only)		0,2		N
– axial at standstill (push only)		2		N
23 Shaft play:				
– radial	≤	0,03		mm
– axial	≤	0,15		mm
24 Housing material		Nickel alloy		
25 Mass		0,35		g
26 Direction of rotation		electronically reversible		
27 Speed up to	$n_{max.}$	96 000		min^{-1}
28 Number of pole pairs		1		
29 Hall sensors		without		
30 Magnet material		NdFeB		

Rated values for continuous operation				
31 Rated torque	M_N		0,013	mNm
32 Rated current (thermal limit)	I_N		0,056	A
33 Rated speed	n_N		24 820	min^{-1}

Note: Rated values are calculated with nominal voltage and at a 22°C ambient temperature. The R_{th2} value has been reduced by 25%.

Note:

The diagram indicates the recommended speed in relation to the available torque at the output shaft for a given ambient temperature of 22°C.

The diagram shows the motor in a completely insulated as well as thermally coupled condition (R_{th2} 50% reduced).

The nominal voltage (U_N) curve shows the operating point at nominal voltage in the insulated and thermally coupled condition. Any points of operation above the curve at nominal voltage will require a higher operating voltage. Any points below the nominal voltage curve will require less voltage.

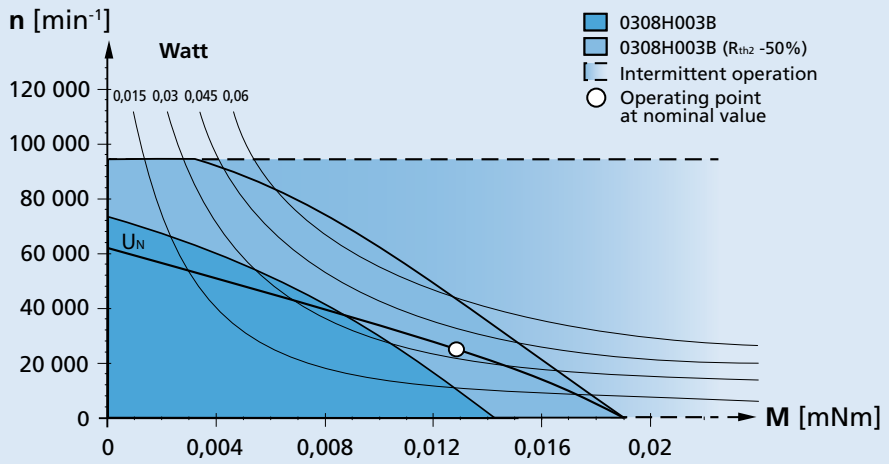

Recommended operation areas (example: nominal voltage 3V)

For notes on technical data and lifetime performance refer to "Technical Information".

Edition 2023 Jun. 14

Backwards

© DR. FRITZ FAULHABER GMBH & CO. KG
Specifications subject to change without notice.

www.faulhaber.com

Dimensional drawing

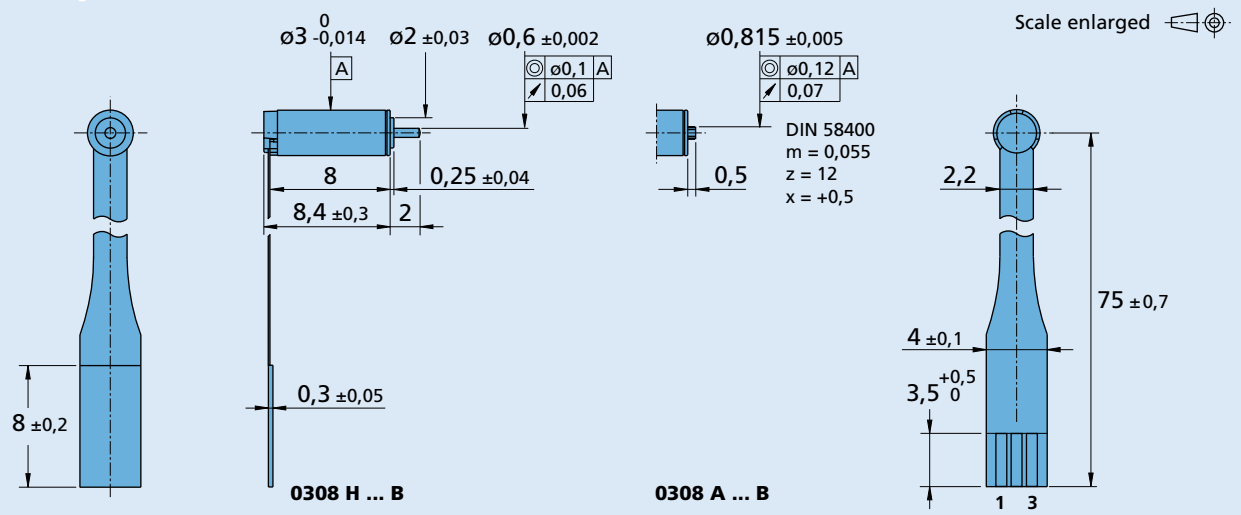

Option, cable and connection information

Example product designation: **0308H003B**

Option	Type	Description

Connection

No.	Function
1	Phase A
2	Phase B
3	Phase C

Flex Print connector
3-pole; 1mm pitch,
e.g.: Molex 52207-0333

Product combination

Precision Gearheads / Lead Screws	Encoders	Drive Electronics	Cables / Accessories
03B		SC 1801 F	To view our large range of accessory parts, please refer to the "Accessories" chapter.

© DR. FRITZ FAULHABER GMBH & CO. KG
Specifications subject to change without notice.

Brushless DC-Servomotors

0,13 mNm

2 Pole Technology, sensorless

0,44 W

Series 0515 ... B

Values at 22°C and nominal voltage		0515 G	006 B	
1 Nominal voltage	U_N		6	V
2 Terminal resistance, phase-phase	R		16,1	Ω
3 Efficiency, max.	$\eta_{max.}$		39	%
4 No-load speed	n_0		43 000	min^{-1}
5 No-load current, typ. (with shaft ø 0,8 mm)	I_0		0,056	A
6 Stall torque	M_H		0,4	mNm
7 Friction torque, static	C_0		0,033	mNm
8 Friction torque, dynamic	C_V		$6{,}5 \cdot 10^{-7}$	mNm/min^{-1}
9 Speed constant	k_n		8 282	min^{-1}/V
10 Back-EMF constant	k_E		0,121	mV/min^{-1}
11 Torque constant	k_M		1,15	mNm/A
12 Current constant	k_I		0,867	A/mNm
13 Slope of n-M curve	$\Delta n/\Delta M$		115 600	min^{-1}/mNm
14 Terminal inductance, phase-phase	L		140	µH
15 Mechanical time constant	τ_m		2,4	ms
16 Rotor inertia	J		0,002	gcm^2
17 Angular acceleration	$\alpha_{max.}$		1 983	$\cdot 10^3 rad/s^2$
18 Thermal resistance	R_{th1} / R_{th2}	21 / 140		K/W
19 Thermal time constant	τ_{w1} / τ_{w2}	1,9 / 89		s
20 Operating temperature range:				
– motor		-30 ... +80		°C
– winding, max. permissible		+80		°C
21 Shaft bearings		sintered bearings		
22 Shaft load max.:				
– with shaft diameter		0,8		mm
– radial at 3 000 min^{-1} (1 mm from mounting flange)		0,2		N
– axial at 3 000 min^{-1} (push only)		0,2		N
– axial at standstill (push only)		2		N
23 Shaft play:				
– radial	≤	0,03		mm
– axial	≤	0,15		mm
24 Housing material		steel, nickel plated		
25 Mass		1,6		g
26 Direction of rotation		electronically reversible		
27 Speed up to	$n_{max.}$	77 000		min^{-1}
28 Number of pole pairs		1		
29 Hall sensors		without		
30 Magnet material		NdFeB		

Rated values for continuous operation				
31 Rated torque	M_N		0,084	mNm
32 Rated current (thermal limit)	I_N		0,127	A
33 Rated speed	n_N		30 880	min^{-1}

Note: Rated values are calculated with nominal voltage and at a 22°C ambient temperature. The R_{th2} value has been reduced by 25%.

Note:

The diagram indicates the recommended speed in relation to the available torque at the output shaft for a given ambient temperature of 22°C.

The diagram shows the motor in a completely insulated as well as thermally coupled condition (R_{th2} 50% reduced).

The nominal voltage (U_N) curve shows the operating point at nominal voltage in the insulated and thermally coupled condition. Any points of operation above the curve at nominal voltage will require a higher operating voltage. Any points below the nominal voltage curve will require less voltage.

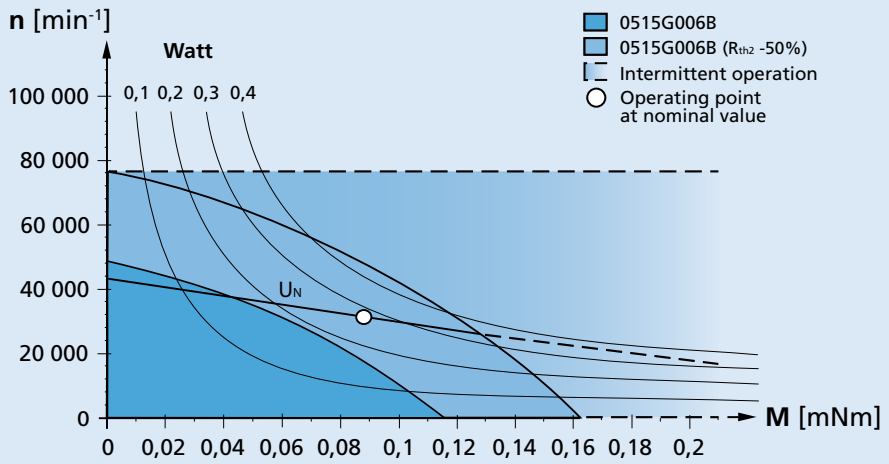

Recommended operation areas (example: nominal voltage 6V)

For notes on technical data and lifetime performance refer to "Technical Information".

Edition 2023 Feb. 17

Backwards

© DR. FRITZ FAULHABER GMBH & CO. KG
Specifications subject to change without notice.

www.faulhaber.com

Dimensional drawing

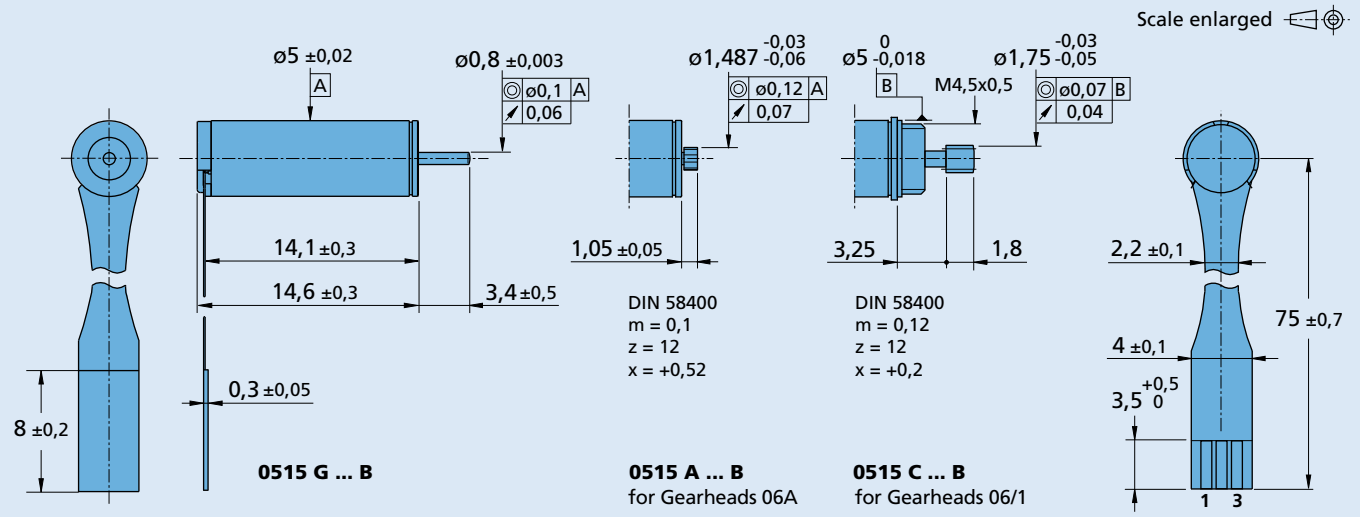

Option, cable and connection information

Example product designation: **0515G006B**

Option	Type	Description

Connection

No.	Function
1	Phase A
2	Phase B
3	Phase C

Flex Print connector
3-pole; 1mm pitch,
e.g.: Molex 52207-0333

Product combination

Precision Gearheads / Lead Screws	Encoders	Drive Electronics	Cables / Accessories
06A 06/1 06L ... SL 06L ... HL		SC 1801 F	To view our large range of accessory parts, please refer to the "Accessories" chapter.

© DR. FRITZ FAULHABER GMBH & CO. KG
Specifications subject to change without notice.

FAULHABER B

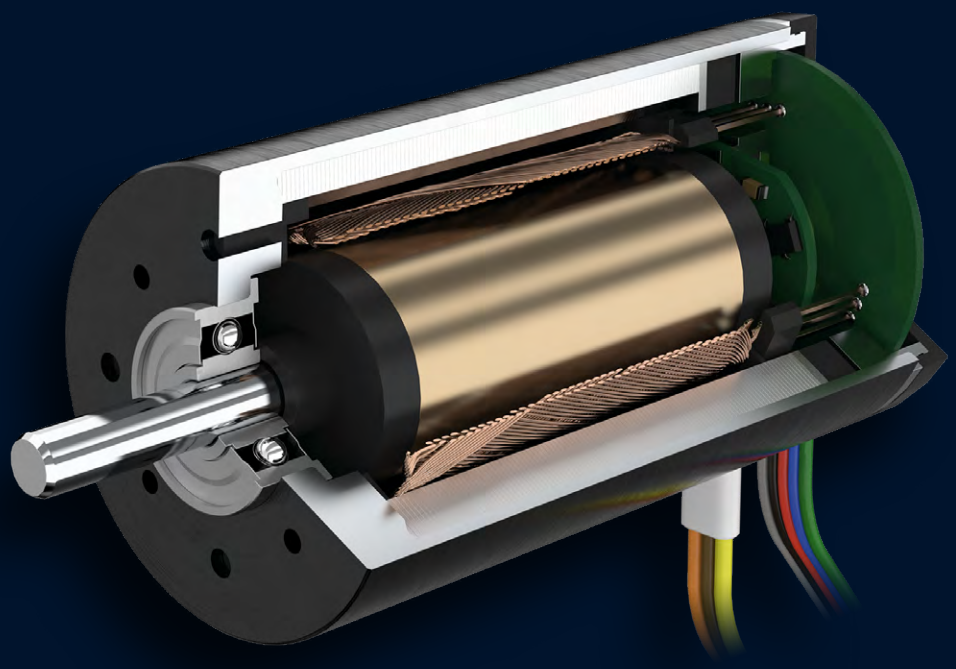

FAULHABER B

0620...B	with integrated Hall Sensors	0.36 mNm
0824...B	with integrated Hall Sensors	1.1 mNm
1028...B	with integrated Hall Sensors	2.2 mNm
1218...B	with integrated Hall Sensors	1.2 mNm
1226...B	with integrated Hall Sensors	2.6 mNm
1628...B	with integrated Hall Sensors	3.3 mNm
2036...B	with integrated Hall Sensors	7.2 mNm
2057...B	with integrated Hall Sensors	19.5 mNm
2057...BA	with Sensors, Autoclave Sterilisation	18.7 mNm
2444...B	with integrated Hall Sensors	18 mNm
3056...B	with integrated Hall Sensors	33 mNm
3564...B	with integrated Hall Sensors	66 mNm
4490...B	with integrated Hall Sensors	190 mNm
4490...BS	with integrated Hall Sensors	217 mNm

Backwards

Brushless DC-Servomotors 0,36 mNm

2 Pole Technology 1,7 W

Series 0620 ... B

Values at 22°C and nominal voltage		0620 K		006 B	012 B	
1	Nominal voltage	U_N		6	12	V
2	Terminal resistance, phase-phase	R		8,8	60,2	Ω
3	Efficiency, max.	$\eta_{max.}$		51	50	%
4	No-load speed	n_0		48 600	37 300	min^{-1}
5	No-load current, typ. (with shaft ø 1 mm)	I_0		0,056	0,018	A
6	Stall torque	M_H		0,732	0,551	mNm
7	Friction torque, static	C_0		0,011	0,011	mNm
8	Friction torque, dynamic	C_V		$1{,}02 \cdot 10^{-6}$	$1{,}02 \cdot 10^{-6}$	mNm/min^{-1}
9	Speed constant	k_n		8 761	3 386	min^{-1}/V
10	Back-EMF constant	k_E		0,114	0,295	mV/min^{-1}
11	Torque constant	k_M		1,09	2,82	mNm/A
12	Current constant	k_I		0,917	0,355	A/mNm
13	Slope of n-M curve	$\Delta n/\Delta M$		70 730	72 289	min^{-1}/mNm
14	Terminal inductance, phase-phase	L		28	192	µH
15	Mechanical time constant	τ_m		7	7,2	ms
16	Rotor inertia	J		0,0095	0,0095	gcm^2
17	Angular acceleration	$\alpha_{max.}$		771	580	$\cdot 10^3 rad/s^2$
18	Thermal resistance	R_{th1} / R_{th2}	13,2 / 84,3			K/W
19	Thermal time constant	τ_{w1} / τ_{w2}	1,1 / 89			s
20	Operating temperature range:					
	– motor		-20 ... +100			°C
	– winding, max. permissible		+125			°C
21	Shaft bearings		ball bearings, preloaded			
22	Shaft load max.:					
	– with shaft diameter		1			mm
	– radial at 10 000 min^{-1} (4 mm from mounting flange)		2			N
	– axial at 10 000 min^{-1} (push only)		0,6			N
	– axial at standstill (push only)		10			N
23	Shaft play:					
	– radial	≤	0,012			mm
	– axial	=	0			mm
24	Housing material		aluminium, black anodized			
25	Mass		2,5			g
26	Direction of rotation		electronically reversible			
27	Speed up to	$n_{max.}$	100 000			min^{-1}
28	Number of pole pairs		1			
29	Hall sensors		digital			
30	Magnet material		NdFeB			

Rated values for continuous operation						
31	Rated torque	M_N		0,28	0,3	mNm
32	Rated current (thermal limit)	I_N		0,311	0,122	A
33	Rated speed	n_N		21 820	7 290	min^{-1}

Note: Rated values are calculated with nominal voltage and at a 22°C ambient temperature. The R_{th2} value has been reduced by 25%.

Note:

The diagram indicates the recommended speed in relation to the available torque at the output shaft for a given ambient temperature of 22°C.

The diagram shows the motor in a completely insulated as well as thermally coupled condition (R_{th2} 50% reduced).

The nominal voltage (U_N) curve shows the operating point at nominal voltage in the insulated and thermally coupled condition. Any points of operation above the curve at nominal voltage will require a higher operating voltage. Any points below the nominal voltage curve will require less voltage.

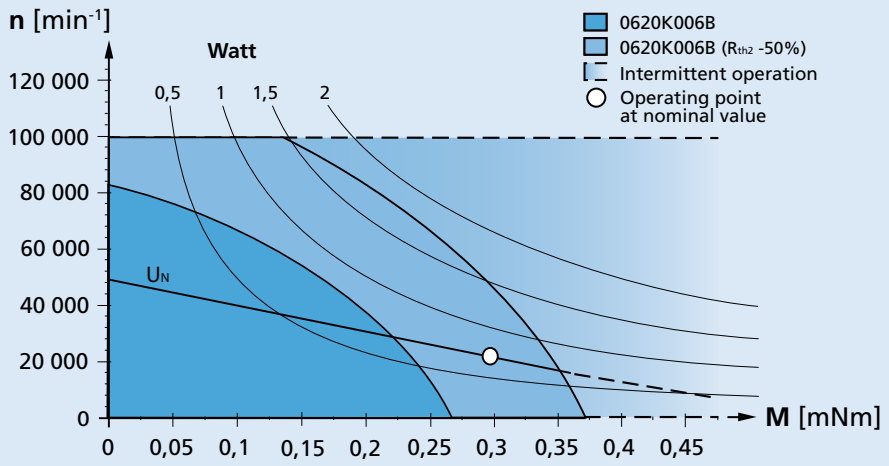

Recommended operation areas (example: nominal voltage 6V)

© DR. FRITZ FAULHABER GMBH & CO. KG
Specifications subject to change without notice.

Dimensional drawing

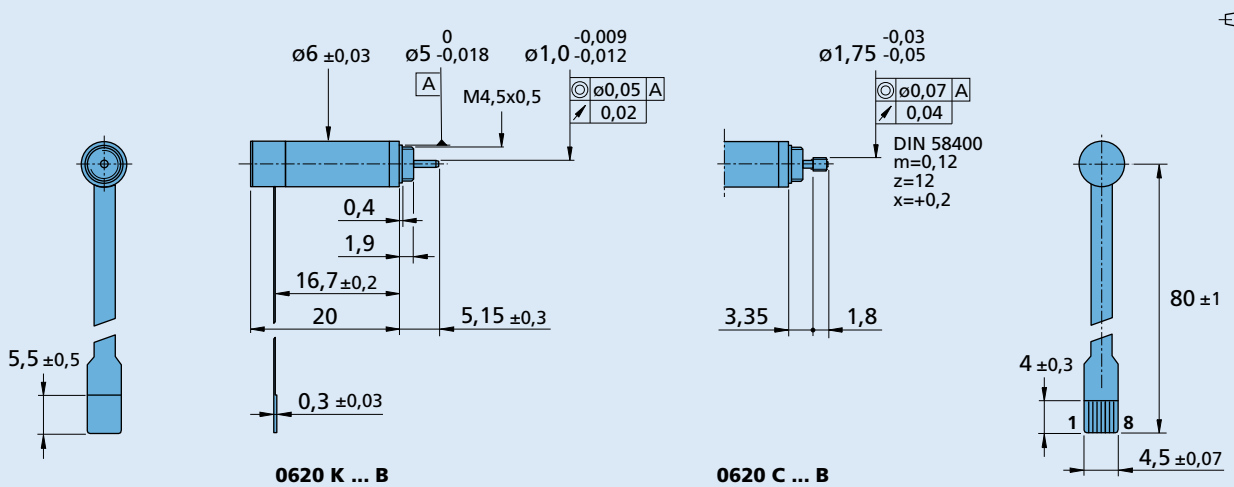

0620 K ... B

0620 C ... B
for Gearheads 06/1

Option, cable and connection information

Example product designation: **0620K006B-K2280**

Option	Type	Description
K2280	Controller combination	Analog Hall sensors for combination with FAULHABER Controller
K2279	Controller combination	Digital Hall sensors for combination with FAULHABER Controller
K179	Bearing lubrication	For vacuum of 10^{-5} Pa @ 22°C
K1719	Encoder combination	Second rear shaft for combination with Encoder PA2-50

Connection standard

No.	Function
1	Phase C
2	Phase B
3	Hall sensor C
4	U_{DD} (+5V)
5	GND
6	Hall sensor A
7	Hall sensor B
8	Phase A

Option: K2280/K2279

No.	Function
8	Phase C
7	Phase B
6	Phase A
5	GND
4	U_{DD} (+5V)
3	Hall sensor C
2	Hall sensor B
1	Hall sensor A

Standard flexboard
8 poles, 0,5 mm pitch

Recommended connector
Molex - ZIF Connector,
No. 52745-0897.

Product combination

Precision Gearheads / Lead Screws	Encoders	Drive Electronics	Cables / Accessories
06/1 06L ... SL 06L ... HL	PA2-50 HXM3-64	SC 1801 F SC 2402 P SC 2804 S MC 3001 B MC 3001 P	To view our large range of accessory parts, please refer to the "Accessories" chapter.

© DR. FRITZ FAULHABER GMBH & CO. KG
Specifications subject to change without notice.

Brushless DC-Servomotors 1,1 mNm

2 Pole Technology 5,8 W

Series 0824 ... B

Values at 22°C and nominal voltage		0824 K	006 B	012 B	
1 Nominal voltage	U_N		6	12	V
2 Terminal resistance, phase-phase	R		2,91	10,7	Ω
3 Efficiency, max.	$\eta_{max.}$		70	70	%
4 No-load speed	n_0		35 100	37 500	min^{-1}
5 No-load current, typ. (with shaft ø 1 mm)	I_0		0,055	0,031	A
6 Stall torque	M_H		3,28	3,34	mNm
7 Friction torque, static	C_0		0,021	0,021	mNm
8 Friction torque, dynamic	C_V		$1{,}89 \cdot 10^{-6}$	$1{,}89 \cdot 10^{-6}$	mNm/min^{-1}
9 Speed constant	k_n		5 968	3 183	min^{-1}/V
10 Back-EMF constant	k_E		0,168	0,314	mV/min^{-1}
11 Torque constant	k_M		1,6	3	mNm/A
12 Current constant	k_I		0,625	0,333	A/mNm
13 Slope of n-M curve	$\Delta n/\Delta M$		10 855	11 353	min^{-1}/mNm
14 Terminal inductance, phase-phase	L		30	107	µH
15 Mechanical time constant	τ_m		2,4	2,5	ms
16 Rotor inertia	J		0,0285	0,0285	gcm^2
17 Angular acceleration	$\alpha_{max.}$		1 561	1 592	$\cdot 10^3 rad/s^2$
18 Thermal resistance	R_{th1} / R_{th2}	11,2 / 55,2			K/W
19 Thermal time constant	τ_{w1} / τ_{w2}	3,5 / 112			s
20 Operating temperature range:					
– motor		-20 ... +100			°C
– winding, max. permissible		+125			°C
21 Shaft bearings		ball bearings, preloaded			
22 Shaft load max.:					
– with shaft diameter		1			mm
– radial at 10 000 min^{-1} (4 mm from mounting flange)		1,5			N
– axial at 10 000 min^{-1} (push only)		0,4			N
– axial at standstill (push only)		10			N
23 Shaft play:					
– radial	≤	0,012			mm
– axial	=	0			mm
24 Housing material		aluminium, black anodized			
25 Mass		5,2			g
26 Direction of rotation		electronically reversible			
27 Speed up to	$n_{max.}$	90 000			min^{-1}
28 Number of pole pairs		1			
29 Hall sensors		digital			
30 Magnet material		NdFeB			

Rated values for continuous operation					
31 Rated torque	M_N		0,89	0,86	mNm
32 Rated current (thermal limit)	I_N		0,66	0,341	A
33 Rated speed	n_N		22 120	24 560	min^{-1}

Note: Rated values are calculated with nominal voltage and at a 22°C ambient temperature. The R_{th2} value has been reduced by 25%.

Note:

The diagram indicates the recommended speed in relation to the available torque at the output shaft for a given ambient temperature of 22°C.

The diagram shows the motor in a completely insulated as well as thermally coupled condition (R_{th2} 50% reduced).

The nominal voltage (U_N) curve shows the operating point at nominal voltage in the insulated and thermally coupled condition. Any points of operation above the curve at nominal voltage will require a higher operating voltage. Any points below the nominal voltage curve will require less voltage.

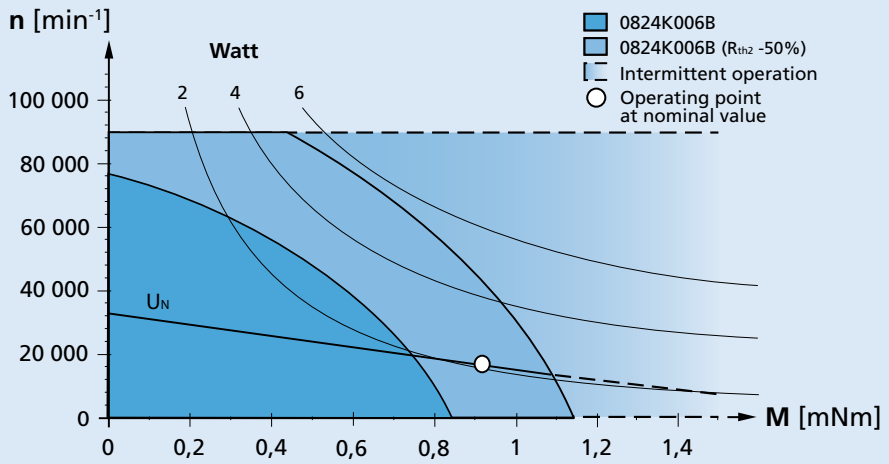

Recommended operation areas (example: nominal voltage 6V)

© DR. FRITZ FAULHABER GMBH & CO. KG
Specifications subject to change without notice.

Dimensional drawing

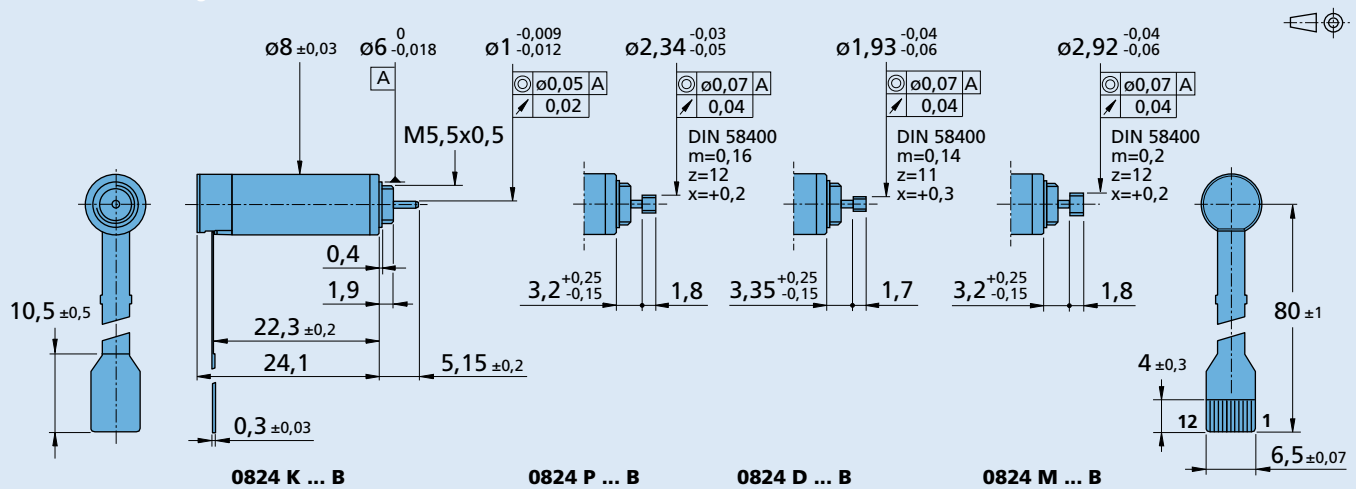

0824 K ... B

0824 P ... B
for Gearhead 08/1

0824 D ... B
for Gearheads 08/2, 08/3

0824 M ... B
for Gearhead 10/1

Option, cable and connection information

Example product designation: **0824K006B-K179**

Option	Type	Description
K179	Bearing lubrication	For vacuum of 10^{-5} Pa @ 22°C

Connection

No.	Function
1	Phase C
2	Phase B
3	Phase A
4	GND
5	U_{DD} (+5V)
6	Hall sensor C
7	Hall sensor B
8	Hall sensor A
9	Hall sensor $\overline{B}$
10	Hall sensor $\overline{A}$
11	Hall sensor $\overline{C}$
12	Reserved

Standard flexboard
12 pole, 0,5 mm pitch

Recommended connector
Molex - ZIF Connector, No. 52745-1297.

Product combination

Precision Gearheads / Lead Screws	Encoders	Drive Electronics	Cables / Accessories
08/1 08/2 08/3 10/1 08L ... SL 08L ... HL 10L ... SL	IEM3-1024 AESM-4096	SC 1801 P SC 1801 S SC 2402 P SC 2804 S MC 3001 B MC 3001 P	To view our large range of accessory parts, please refer to the “Accessories” chapter.

© DR. FRITZ FAULHABER GMBH & CO. KG
Specifications subject to change without notice.

Brushless DC-Servomotors 2,2 mNm

2 Pole Technology 8,7 W

Series 1028 ... B

Values at 22°C and nominal voltage		1028 S	006 B	012 B	
1 Nominal voltage	U_N		6	12	V
2 Terminal resistance, phase-phase	R		1,08	4,37	Ω
3 Efficiency, max.	$\eta_{max.}$		73	72	%
4 No-load speed	n_0		32 300	33 600	min^{-1}
5 No-load current, typ. (with shaft ø 1,2 mm)	I_0		0,121	0,065	A
6 Stall torque	M_H		9,72	9,22	mNm
7 Friction torque, static	C_0		0,06	0,06	mNm
8 Friction torque, dynamic	C_V		$4{,}62 \cdot 10^{-6}$	$4{,}62 \cdot 10^{-6}$	mNm/min^{-1}
9 Speed constant	k_n		5 426	2 825	min^{-1}/V
10 Back-EMF constant	k_E		0,184	0,354	mV/min^{-1}
11 Torque constant	k_M		1,76	3,38	mNm/A
12 Current constant	k_I		0,568	0,296	A/mNm
13 Slope of n-M curve	$\Delta n/\Delta M$		3 329	3 653	min^{-1}/mNm
14 Terminal inductance, phase-phase	L		24	87	µH
15 Mechanical time constant	τ_m		1,9	2,1	ms
16 Rotor inertia	J		0,0622	0,0622	gcm^2
17 Angular acceleration	$\alpha_{max.}$		1 803	1 711	$\cdot 10^3 rad/s^2$
18 Thermal resistance	R_{th1} / R_{th2}	6,6 / 42,4			K/W
19 Thermal time constant	τ_{w1} / τ_{w2}	4,2 / 152			s
20 Operating temperature range:					
– motor		-20 ... +100			°C
– winding, max. permissible		+125			°C
21 Shaft bearings		ball bearings, preloaded			
22 Shaft load max.:					
– with shaft diameter		1,2			mm
– radial at 10 000 min^{-1} (4 mm from mounting flange)		2,5			N
– axial at 10 000 min^{-1} (push only)		1,3			N
– axial at standstill (push only)		11			N
23 Shaft play:					
– radial	≤	0,012			mm
– axial	=	0			mm
24 Housing material		aluminium, black anodized			
25 Mass		9,4			g
26 Direction of rotation		electronically reversible			
27 Speed up to	$n_{max.}$	79 000			min^{-1}
28 Number of pole pairs		1			
29 Hall sensors		digital			
30 Magnet material		NdFeB			

Rated values for continuous operation					
31 Rated torque	M_N		1,68	1,57	mNm
32 Rated current (thermal limit)	I_N		1,16	0,57	A
33 Rated speed	n_N		25 660	26 800	min^{-1}

Note: Rated values are calculated with nominal voltage and at a 22°C ambient temperature. The R_{th2} value has been reduced by 25%.

Note:

The diagram indicates the recommended speed in relation to the available torque at the output shaft for a given ambient temperature of 22°C.

The diagram shows the motor in a completely insulated as well as thermally coupled condition (R_{th2} 50% reduced).

The nominal voltage (U_N) curve shows the operating point at nominal voltage in the insulated and thermally coupled condition. Any points of operation above the curve at nominal voltage will require a higher operating voltage. Any points below the nominal voltage curve will require less voltage.

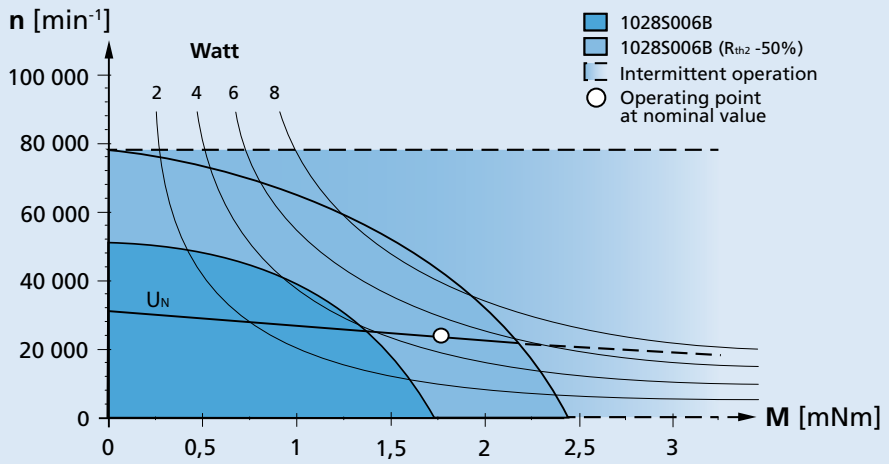

Recommended operation areas (example: nominal voltage 6V)

For notes on technical data and lifetime performance refer to "Technical Information".

Backwards

© DR. FRITZ FAULHABER GMBH & CO. KG
Specifications subject to change without notice.

Dimensional drawing

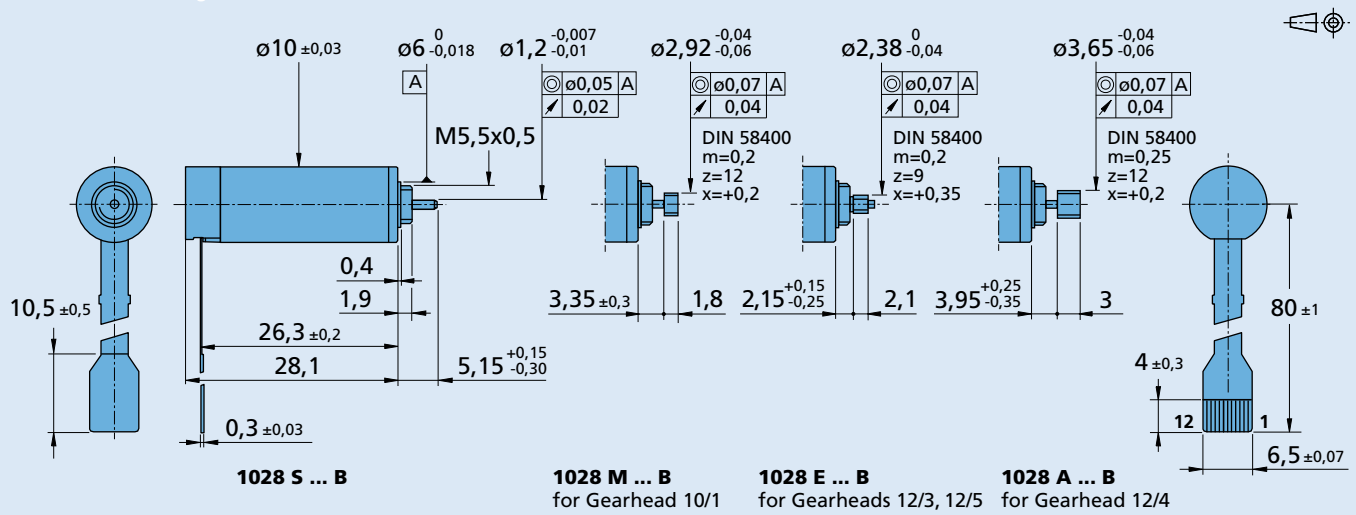

Option, cable and connection information

Example product designation: **1028S006B-K179**

Option	Type	Description
K179	Bearing lubrication	For vacuum of 10^{-5} Pa @ 22°C

Connection

No.	Function
1	Phase C
2	Phase B
3	Phase A
4	GND
5	U_{DD} (+5V)
6	Hall sensor C
7	Hall sensor B
8	Hall sensor A
9	Hall sensor $\overline{B}$
10	Hall sensor $\overline{A}$
11	Hall sensor $\overline{C}$
12	Reserved

Standard flexboard
12 pole, 0,5 mm pitch

Recommended connector
Molex - ZIF Connector, No. 52745-1297.

Product combination

Precision Gearheads / Lead Screws	Encoders	Drive Electronics	Cables / Accessories
10/1 12/3 12/4 12/5 10L ... SL	IEM3-1024 AESM-4096	SC 1801 P SC 1801 S SC 2402 P SC 2804 S MC 3001 B MC 3001 P	To view our large range of accessory parts, please refer to the "Accessories" chapter.

© DR. FRITZ FAULHABER GMBH & CO. KG
Specifications subject to change without notice.

Brushless DC-Servomotors 1,2 mNm

2 Pole Technology 4,9 W

Series 1218 ... B

Values at 22°C and nominal voltage		1218 S	006 B	012 B	
1 Nominal voltage	U_N		6	12	V
2 Terminal resistance, phase-phase	R		3,14	12	Ω
3 Efficiency, max.	$\eta_{max.}$		62	62	%
4 No-load speed	n_0		30 500	31 500	min^{-1}
5 No-load current, typ. (with shaft ø 1,2 mm)	I_0		0,089	0,047	A
6 Stall torque	M_H		3,39	3,44	mNm
7 Friction torque, static	C_0		0,066	0,066	mNm
8 Friction torque, dynamic	C_V		$3{,}06 \cdot 10^{-6}$	$3{,}06 \cdot 10^{-6}$	mNm/min^{-1}
9 Speed constant	k_n		5 276	2 721	min^{-1}/V
10 Back-EMF constant	k_E		0,19	0,368	mV/min^{-1}
11 Torque constant	k_M		1,81	3,51	mNm/A
12 Current constant	k_I		0,553	0,285	A/mNm
13 Slope of n-M curve	$\Delta n/\Delta M$		9 153	9 301	min^{-1}/mNm
14 Terminal inductance, phase-phase	L		35	132	µH
15 Mechanical time constant	τ_m		7,7	7,8	ms
16 Rotor inertia	J		0,08	0,08	gcm^2
17 Angular acceleration	$\alpha_{max.}$		424	431	$\cdot 10^3 rad/s^2$
18 Thermal resistance	R_{th1} / R_{th2}	10,6 / 48,3			K/W
19 Thermal time constant	τ_{w1} / τ_{w2}	2,8 / 169			s
20 Operating temperature range:					
– motor		-20 ... +100			°C
– winding, max. permissible		+125			°C
21 Shaft bearings		ball bearings, preloaded			
22 Shaft load max.:					
– with shaft diameter		1,2			mm
– radial at 10 000 min^{-1} (4 mm from mounting flange)		3,5			N
– axial at 10 000 min^{-1} (push only)		2			N
– axial at standstill (push only)		11			N
23 Shaft play:					
– radial	≤	0,012			mm
– axial	=	0			mm
24 Housing material		aluminium, black anodized			
25 Mass		8,3			g
26 Direction of rotation		electronically reversible			
27 Speed up to	$n_{max.}$	79 000			min^{-1}
28 Number of pole pairs		1			
29 Hall sensors		digital			
30 Magnet material		NdFeB			

Rated values for continuous operation					
31 Rated torque	M_N		0,96	0,95	mNm
32 Rated current (thermal limit)	I_N		0,663	0,34	A
33 Rated speed	n_N		18 280	19 150	min^{-1}

Note: Rated values are calculated with nominal voltage and at a 22°C ambient temperature. The R_{th2} value has been reduced by 25%.

Note:

The diagram indicates the recommended speed in relation to the available torque at the output shaft for a given ambient temperature of 22°C.

The diagram shows the motor in a completely insulated as well as thermally coupled condition (R_{th2} 50% reduced).

The nominal voltage (U_N) curve shows the operating point at nominal voltage in the insulated and thermally coupled condition. Any points of operation above the curve at nominal voltage will require a higher operating voltage. Any points below the nominal voltage curve will require less voltage.

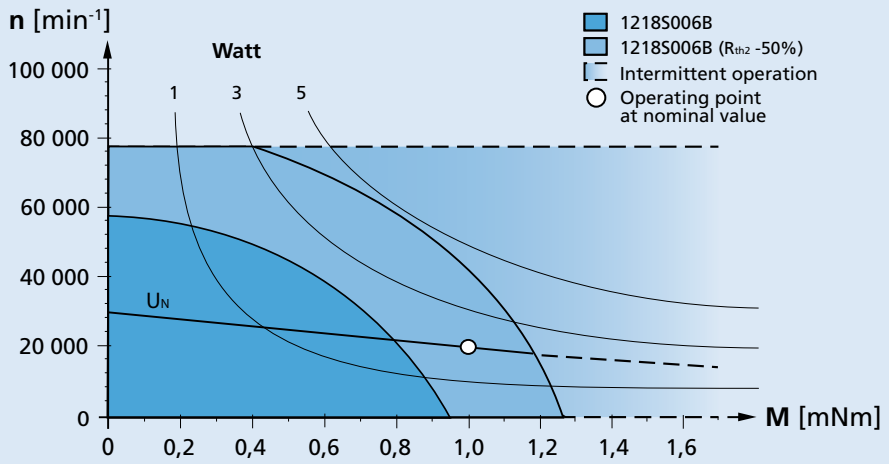

Recommended operation areas (example: nominal voltage 6V)

For notes on technical data and lifetime performance refer to "Technical Information".

Backwards

© DR. FRITZ FAULHABER GMBH & CO. KG
Specifications subject to change without notice.

Dimensional drawing

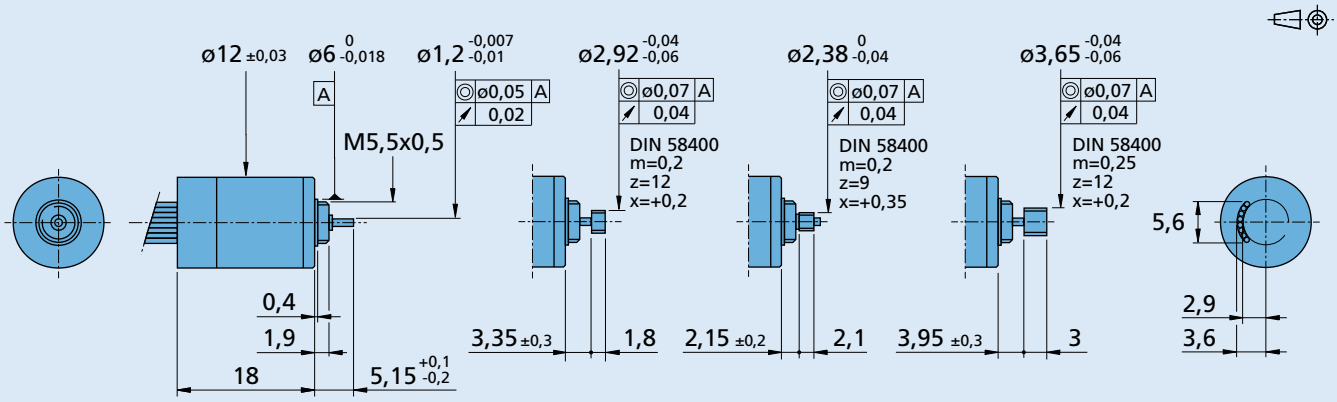

1218 S ... B

1218 M ... B
for Gearhead 10/1

1218 E ... B
for Gearheads 12/3, 12/5

1218 A ... B
for Gearhead 12/4

Option, cable and connection information

Example product designation: **1218S006B-K1855**

Option	Type	Description
K1855	Controller combination	Analog Hall sensors for combination with Speed Controller SC or Motion Controller MC
K179	Bearing lubrication	For vacuum of 10^{-5} Pa @ 22°C

Connection

Function	Colour
Phase C	yellow
Phase B	orange
Phase A	brown
GND	black
U_{DD} (+5V)	red
Hall sensor C	grey
Hall sensor B	blue
Hall sensor A	green

Standard cable

Single wires, material PTFE
8 conductors, AWG 30
Length: 80 mm ±3 mm

Product combination

Precision Gearheads / Lead Screws	Encoders	Drive Electronics	Cables / Accessories
10/1 12/3 12/4 12/5 10L ... SL		SC 1801 P SC 1801 S SC 2402 P SC 2804 S MC 3001 B MC 3001 P MC 3603 S MC 5004 P	To view our large range of accessory parts, please refer to the "Accessories" chapter.

© DR. FRITZ FAULHABER GMBH & CO. KG
Specifications subject to change without notice.

Brushless DC-Servomotors

2 Pole Technology

2,6 mNm

9,9 W

Series 1226 ... B

Values at 22°C and nominal voltage		1226 S	006 B	012 B	024 B	
1 Nominal voltage	U_N		6	12	24	V
2 Terminal resistance, phase-phase	R		2,2	5,45	18,1	Ω
3 Efficiency, max.	$\eta_{max.}$		71	72	72	%
4 No-load speed	n_0		21 000	27 400	29 700	min^{-1}
5 No-load current, typ. (with shaft ø 1,2 mm)	I_0		0,07	0,054	0,031	A
6 Stall torque	M_H		7,24	8,99	10,2	mNm
7 Friction torque, static	C_0		0,073	0,073	0,073	mNm
8 Friction torque, dynamic	C_V		$5{,}3 \cdot 10^{-6}$	$5{,}3 \cdot 10^{-6}$	$5{,}3 \cdot 10^{-6}$	mNm/min^{-1}
9 Speed constant	k_n		3 563	2 318	1 237	min^{-1}/V
10 Back-EMF constant	k_E		0,281	0,431	0,808	mV/min^{-1}
11 Torque constant	k_M		2,68	4,12	7,72	mNm/A
12 Current constant	k_I		0,373	0,243	0,13	A/mNm
13 Slope of n-M curve	$\Delta n/\Delta M$		2 925	3 066	2 902	min^{-1}/mNm
14 Terminal inductance, phase-phase	L		36	85	307	µH
15 Mechanical time constant	τ_m		4,4	4,7	4,6	ms
16 Rotor inertia	J		0,15	0,15	0,15	gcm^2
17 Angular acceleration	$\alpha_{max.}$		499	621	677	$\cdot 10^3 rad/s^2$
18 Thermal resistance	R_{th1} / R_{th2}	7,3 / 36,6				K/W
19 Thermal time constant	τ_{w1} / τ_{w2}	3,2 / 207				s
20 Operating temperature range:						
– motor		-20 ... +100				°C
– winding, max. permissible		+125				°C
21 Shaft bearings		ball bearings, preloaded				
22 Shaft load max.:						
– with shaft diameter		1,2				mm
– radial at 10 000 min^{-1} (4 mm from mounting flange)		5				N
– axial at 10 000 min^{-1} (push only)		2,5				N
– axial at standstill (push only)		11				N
23 Shaft play:						
– radial	≤	0,012				mm
– axial	=	0				mm
24 Housing material		aluminium, black anodized				
25 Mass		13				g
26 Direction of rotation		electronically reversible				
27 Speed up to	$n_{max.}$	79 000				min^{-1}
28 Number of pole pairs		1				
29 Hall sensors		digital				
30 Magnet material		NdFeB				

Rated values for continuous operation						
31 Rated torque	M_N		2,13	1,97	1,99	mNm
32 Rated current (thermal limit)	I_N		0,932	0,573	0,311	A
33 Rated speed	n_N		12 480	19 670	22 140	min^{-1}

Note: Rated values are calculated with nominal voltage and at a 22°C ambient temperature. The R_{th2} value has been reduced by 25%.

Note:

The diagram indicates the recommended speed in relation to the available torque at the output shaft for a given ambient temperature of 22°C.

The diagram shows the motor in a completely insulated as well as thermally coupled condition (R_{th2} 50% reduced).

The nominal voltage (U_N) curve shows the operating point at nominal voltage in the insulated and thermally coupled condition. Any points of operation above the curve at nominal voltage will require a higher operating voltage. Any points below the nominal voltage curve will require less voltage.

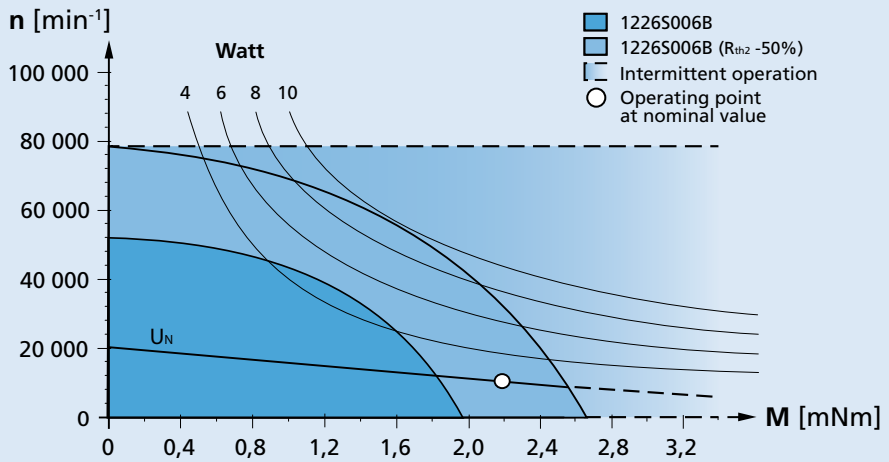

Recommended operation areas (example: nominal voltage 6V)

For notes on technical data and lifetime performance refer to "Technical Information".

Edition 2023 Nov. 27

Backwards

© DR. FRITZ FAULHABER GMBH & CO. KG
Specifications subject to change without notice.

www.faulhaber.com

Dimensional drawing

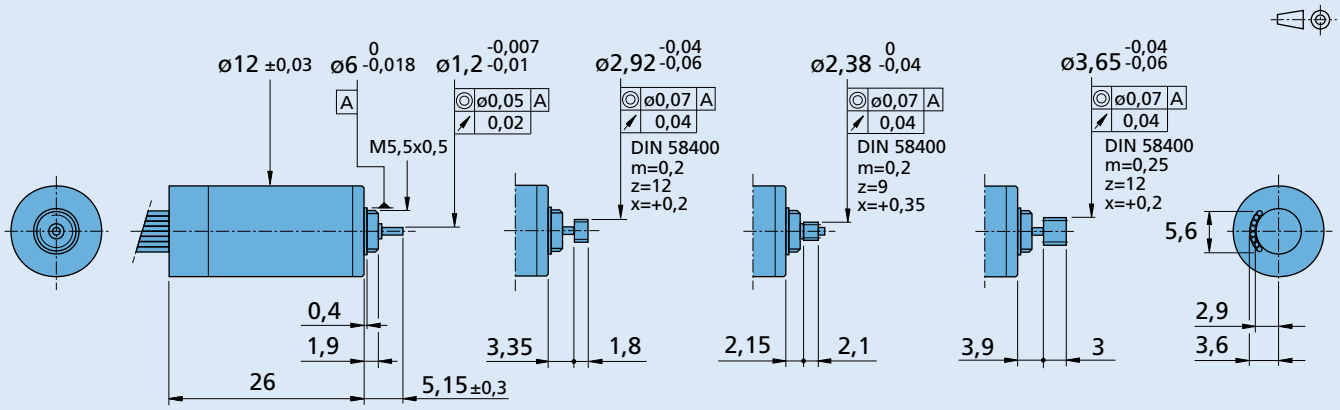

1226 S ... B

1226 M ... B
for Gearheads 10/1

1226 E ... B
for Gearheads 12/3, 12/5

1226 A ... B
for Gearheads 12/4

Option, cable and connection information

Example product designation: **1226S006B-K1855**

Option	Type	Description
K1855	Controller combination	Analog Hall sensors for combination with Speed Controller SC or Motion Controller MC
K179	Bearing lubrication	For vacuum of 10^{-5} Pa @ 22°C

Connection

Function	Colour
Phase C	yellow
Phase B	orange
Phase A	brown
GND	black
U_{DD} (+5V)	red
Hall sensor C	grey
Hall sensor B	blue
Hall sensor A	green

Standard cable

Single wires, material PTFE
8 conductors, AWG 30
Length: 80 mm ±3 mm

Product combination

Precision Gearheads / Lead Screws	Encoders	Drive Electronics	Cables / Accessories
10/1 12/3 12/4 12/5 10L ... SL		SC 1801 P SC 1801 S SC 2402 P SC 2804 S MC 3001 B MC 3001 P MC 3603 S MC 5004 P	To view our large range of accessory parts, please refer to the "Accessories" chapter.

© DR. FRITZ FAULHABER GMBH & CO. KG
Specifications subject to change without notice.

Brushless DC-Servomotors

3,3 mNm

2 Pole Technology

17 W

Series 1628 ... B

Values at 22°C and nominal voltage		1628 T		012 B	024 B	
1	Nominal voltage	U_N		12	24	V
2	Terminal resistance, phase-phase	R		4,36	15,2	Ω
3	Efficiency, max.	$\eta_{max.}$		68	69	%
4	No-load speed	n_0		30 800	31 600	min^{-1}
5	No-load current, typ. (with shaft ø 1,5 mm)	I_0		0,087	0,045	A
6	Stall torque	M_H		9,79	11	mNm
7	Friction torque, static	C_0		0,148	0,148	mNm
8	Friction torque, dynamic	C_V		$5{,}33 \cdot 10^{-6}$	$5{,}33 \cdot 10^{-6}$	mNm/min^{-1}
9	Speed constant	k_n		2 645	1 349	min^{-1}/V
10	Back-EMF constant	k_E		0,378	0,741	mV/min^{-1}
11	Torque constant	k_M		3,61	7,08	mNm/A
12	Current constant	k_I		0,277	0,141	A/mNm
13	Slope of n-M curve	$\Delta n/\Delta M$		3 195	2 896	min^{-1}/mNm
14	Terminal inductance, phase-phase	L		134	517	µH
15	Mechanical time constant	τ_m		18,1	16,4	ms
16	Rotor inertia	J		0,54	0,54	gcm^2
17	Angular acceleration	$\alpha_{max.}$		181	204	$\cdot 10^3 rad/s^2$
18	Thermal resistance	R_{th1} / R_{th2}	5,6 / 22,5			K/W
19	Thermal time constant	τ_{w1} / τ_{w2}	5,7 / 283			s
20	Operating temperature range:					
	– motor		-30 ... +125			°C
	– winding, max. permissible		+125			°C
21	Shaft bearings		ball bearings, preloaded			
22	Shaft load max.:					
	– with shaft diameter		1,5			mm
	– radial at 3 000 min^{-1} (4 mm from mounting flange)		17			N
	– axial at 3 000 min^{-1} (push only)		10			N
	– axial at standstill (push only)		20			N
23	Shaft play:					
	– radial	≤	0,015			mm
	– axial	=	0			mm
24	Housing material		aluminium, black anodized			
25	Mass		30			g
26	Direction of rotation		electronically reversible			
27	Speed up to	$n_{max.}$	70 000			min^{-1}
28	Number of pole pairs		1			
29	Hall sensors		digital			
30	Magnet material		SmCo			

Rated values for continuous operation						
31	Rated torque	M_N		2,62	2,74	mNm
32	Rated current (thermal limit)	I_N		0,829	0,442	A
33	Rated speed	n_N		19 130	20 540	min^{-1}

Note: Rated values are calculated with nominal voltage and at a 22°C ambient temperature. The R_{th2} value has been reduced by 25%.

Note:

The diagram indicates the recommended speed in relation to the available torque at the output shaft for a given ambient temperature of 22°C.

The diagram shows the motor in a completely insulated as well as thermally coupled condition (R_{th2} 50% reduced).

The nominal voltage (U_N) curve shows the operating point at nominal voltage in the insulated and thermally coupled condition. Any points of operation above the curve at nominal voltage will require a higher operating voltage. Any points below the nominal voltage curve will require less voltage.

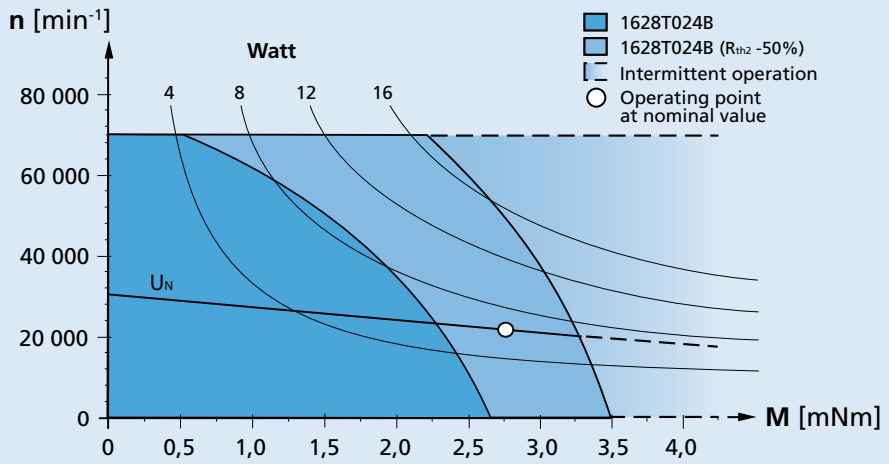

Recommended operation areas (example: nominal voltage 24V)

For notes on technical data and lifetime performance refer to "Technical Information".

Backwards

© DR. FRITZ FAULHABER GMBH & CO. KG
Specifications subject to change without notice.

Dimensional drawing

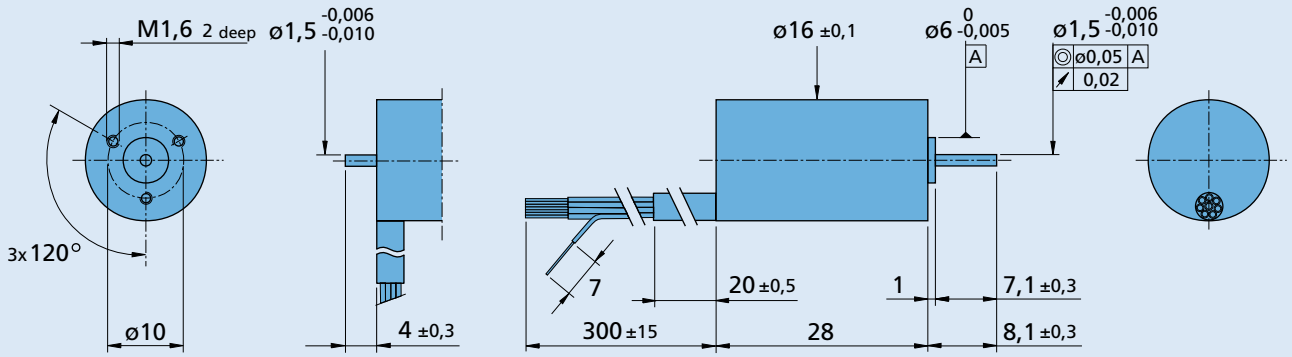

1628 T ... B - K312 **1628 T ... B**

Option, cable and connection information

Example product designation: **1628T012B-K1155**

Option	Type	Description
K1155	Controller combination	Analog Hall sensors for combination with Speed Controller SC or Motion Controller MC
K903	Lead wires length	Single lead wires 1000 mm long in PTFE
K313	Encoder combination	Motor with rear end shaft for combination with Encoder IE2
K312	Encoder combination	Motor with rear end shaft
K179	Bearing lubrication	For vacuum of 10^{-5} Pa @ 22°C

Connection

Function	Colour
Phase C	yellow
Phase B	orange
Phase A	brown
GND	black
U_{DD} (+5V)	red
Hall sensor C	grey
Hall sensor B	blue
Hall sensor A	green

Standard cable

Single wires, material PTFE
8 conductors, AWG 26

Product combination

Precision Gearheads / Lead Screws	Encoders	Drive Electronics	Cables / Accessories
15/10 16/7 17/1	IE2-1024	SC 1801 P SC 1801 S SC 2402 P SC 2804 S MC 3001 B MC 3001 P MC 3603 S MC 5004 P	To view our large range of accessory parts, please refer to the "Accessories" chapter.

© DR. FRITZ FAULHABER GMBH & CO. KG
Specifications subject to change without notice.

Brushless DC-Servomotors 7,2 mNm

2 Pole Technology 25 W

Series 2036 ... B

Values at 22°C and nominal voltage	2036 U		012 B	024 B	036 B	048 B	
1 Nominal voltage	U_N		12	24	36	48	V
2 Terminal resistance, phase-phase	R		3,24	13,4	26,4	62,3	Ω
3 Efficiency, max.	$\eta_{max.}$		71	72	71	69	%
4 No-load speed	n_0		18 800	18 400	20 300	18 500	min^{-1}
5 No-load current, typ. (with shaft ø 2 mm)	I_0		0,089	0,043	0,033	0,022	A
6 Stall torque	M_H		21,9	21,6	22,4	18,4	mNm
7 Friction torque, static	C_0		0,22	0,22	0,22	0,22	mNm
8 Friction torque, dynamic	C_V		$1{,}64 \cdot 10^{-5}$	$1{,}64 \cdot 10^{-5}$	$1{,}64 \cdot 10^{-5}$	$1{,}64 \cdot 10^{-5}$	mNm/min^{-1}
9 Speed constant	k_n		1 602	783	575	396	min^{-1}/V
10 Back-EMF constant	k_E		0,624	1,28	1,74	2,52	mV/min^{-1}
11 Torque constant	k_M		5,96	12,2	16,6	24,1	mNm/A
12 Current constant	k_I		0,168	0,082	0,06	0,042	A/mNm
13 Slope of n-M curve	$\Delta n/\Delta M$		871	860	915	1 024	min^{-1}/mNm
14 Terminal inductance, phase-phase	L		145	613	1 132	2 390	µH
15 Mechanical time constant	τ_m		17,8	17,6	18,7	20,9	ms
16 Rotor inertia	J		1,95	1,95	1,95	1,95	gcm^2
17 Angular acceleration	$\alpha_{max.}$		112	111	115	94	$\cdot 10^3 rad/s^2$
18 Thermal resistance	R_{th1} / R_{th2}	4,1 / 16,6					K/W
19 Thermal time constant	τ_{w1} / τ_{w2}	6 / 397					s
20 Operating temperature range:							
– motor		-30 ... +125					°C
– winding, max. permissible		+125					°C
21 Shaft bearings		ball bearings, preloaded					
22 Shaft load max.:							
– with shaft diameter		2					mm
– radial at 3 000 min^{-1} (4 mm from mounting flange)		14,5					N
– axial at 3 000 min^{-1} (push only)		8					N
– axial at standstill (push only)		30					N
23 Shaft play:							
– radial	≤	0,015					mm
– axial	=	0					mm
24 Housing material		aluminium, black anodized					
25 Mass		56					g
26 Direction of rotation		electronically reversible					
27 Speed up to	$n_{max.}$	55 000					min^{-1}
28 Number of pole pairs		1					
29 Hall sensors		digital					
30 Magnet material		SmCo					

Rated values for continuous operation							
31 Rated torque	M_N		6,08	6,14	5,87	5,62	mNm
32 Rated current (thermal limit)	I_N		1,14	0,559	0,396	0,26	A
33 Rated speed	n_N		11 430	11 010	12 810	10 450	min^{-1}

Note: Rated values are calculated with nominal voltage and at a 22°C ambient temperature. The R_{th2} value has been reduced by 25%.

Note:

The diagram indicates the recommended speed in relation to the available torque at the output shaft for a given ambient temperature of 22°C.

The diagram shows the motor in a completely insulated as well as thermally coupled condition (R_{th2} 50% reduced).

The nominal voltage (U_N) curve shows the operating point at nominal voltage in the insulated and thermally coupled condition. Any points of operation above the curve at nominal voltage will require a higher operating voltage. Any points below the nominal voltage curve will require less voltage.

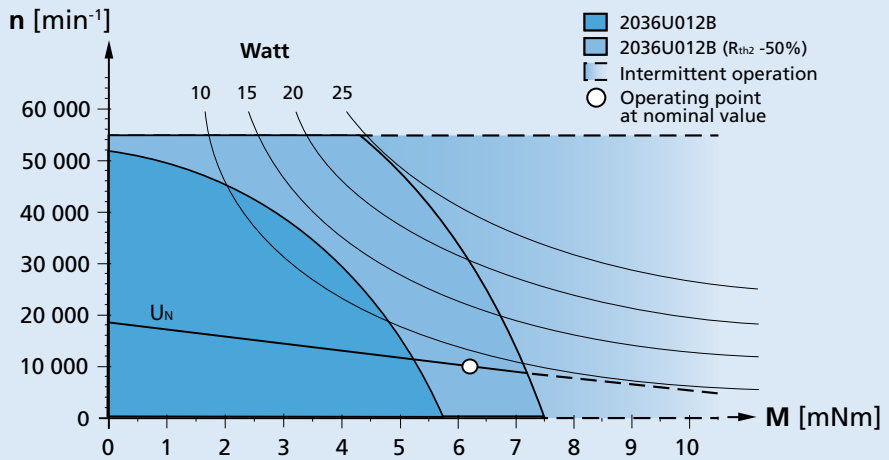

Recommended operation areas (example: nominal voltage 12V)

© DR. FRITZ FAULHABER GMBH & CO. KG
Specifications subject to change without notice.

Dimensional drawing

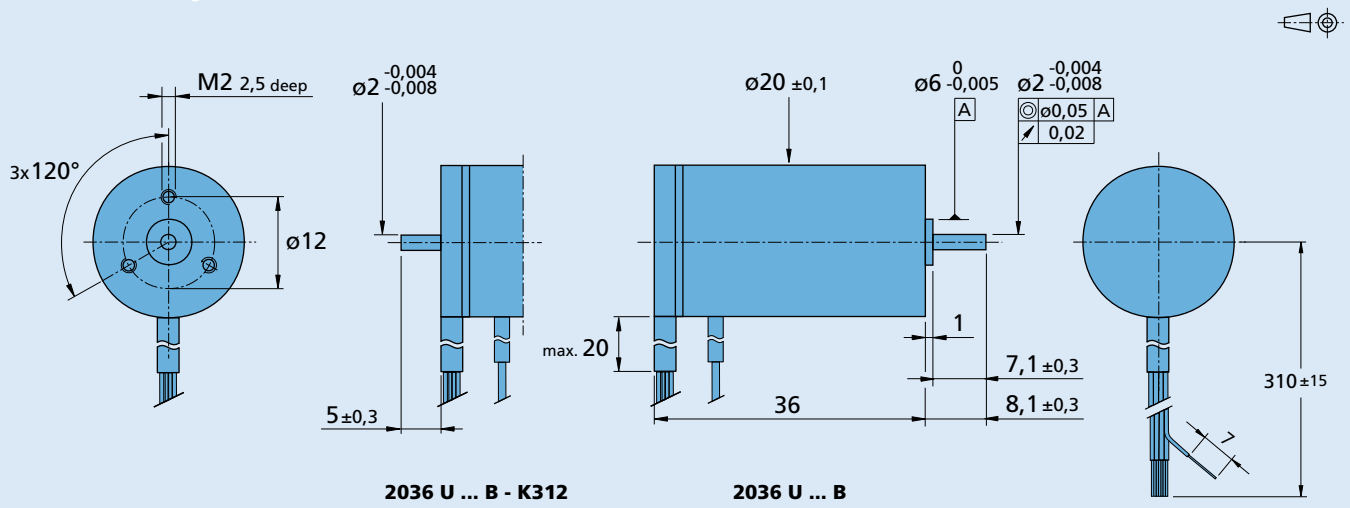

Option, cable and connection information

Example product designation: **2036U012B-K1155**

Option	Type	Description
K1155	Controller combination	Analog Hall sensors for combination with Speed Controller SC or Motion Controller MC
K1026	Sensorless	Motor without Hall sensors
K903	Lead wires length	Single lead wires 1000 mm long in PTFE
K313	Encoder combination	Motor with rear end shaft for combination with Encoder IE2
K312	Encoder combination	Motor with rear end shaft for combination with Encoder HEDS/HEDL/HEDM
K179	Bearing lubrication	For vacuum of 10^{-5} Pa @ 22°C

Connection

Function	Colour
Phase C	yellow
Phase B	orange
Phase A	brown
GND	black
U_{DD} (+5V)	red
Hall sensor C	grey
Hall sensor B	blue
Hall sensor A	green

Standard cable

Single wires, material PTFE
AWG 24: Phase A/B/C
AWG 26: Hall A/B/C, U_{DD}, GND

Product combination

Precision Gearheads / Lead Screws	Encoders	Drive Electronics	Cables / Accessories
20/1R 22GPT 22L ... ML 22L ... SB 22L ... PB	IE2-1024 HEDS 5500 HEDL 5540	SC 1801 P SC 1801 S SC 2402 P SC 2804 S SC 5004 P MC 3001 B MC 3001 P MC 3603 S MC 5004 P MC 5005 S	To view our large range of accessory parts, please refer to the "Accessories" chapter.

© DR. FRITZ FAULHABER GMBH & CO. KG
Specifications subject to change without notice.

Brushless DC-Servomotors 19,5 mNm

2 Pole Technology 63,2 W

Series 2057 ... B

Values at 22°C and nominal voltage		2057 S		012 B	024 B	
1	Nominal voltage	U_N		12	24	V
2	Terminal resistance, phase-phase	R		0,523	1,32	Ω
3	Efficiency, max.	$\eta_{max.}$		83	84	%
4	No-load speed	n_0		21 000	24 900	min^{-1}
5	No-load current, typ. (with shaft ø 3 mm)	I_0		0,187	0,129	A
6	Stall torque	M_H		127	172	mNm
7	Friction torque, static	C_0		0,15	0,15	mNm
8	Friction torque, dynamic	C_V		$4{,}13 \cdot 10^{-5}$	$4{,}13 \cdot 10^{-5}$	mNm/min^{-1}
9	Speed constant	k_n		1 720	1 010	min^{-1}/V
10	Back-EMF constant	k_E		0,582	0,991	mV/min^{-1}
11	Torque constant	k_M		5,55	9,46	mNm/A
12	Current constant	k_I		0,18	0,106	A/mNm
13	Slope of n-M curve	$\Delta n/\Delta M$		162	141	min^{-1}/mNm
14	Terminal inductance, phase-phase	L		38,5	114	µH
15	Mechanical time constant	τ_m		6,78	5,9	ms
16	Rotor inertia	J		4	4	gcm^2
17	Angular acceleration	$\alpha_{max.}$		318	430	$\cdot 10^3 rad/s^2$
18	Thermal resistance	R_{th1} / R_{th2}	2,5 / 12			K/W
19	Thermal time constant	τ_{w1} / τ_{w2}	7,3 / 720			s
20	Operating temperature range:					
	– motor		-30 ... +125			°C
	– winding, max. permissible		+125			°C
21	Shaft bearings		ball bearings, preloaded			
22	Shaft load max.:					
	– with shaft diameter		3			mm
	– radial at 3 000 min^{-1} (5 mm from mounting flange)		28			N
	– axial at 3 000 min^{-1} (push only)		17			N
	– axial at standstill (push only)		75			N
23	Shaft play:					
	– radial	≤	0,015			mm
	– axial	=	0			mm
24	Housing material		aluminium, black anodized			
25	Mass		95			g
26	Direction of rotation		electronically reversible			
27	Speed up to	$n_{max.}$	55 000			min^{-1}
28	Number of pole pairs		1			
29	Hall sensors		digital			
30	Magnet material		NdFeB			

Rated values for continuous operation						
31	Rated torque	M_N		16,1	16,2	mNm
32	Rated current (thermal limit)	I_N		3,38	1,99	A
33	Rated speed	n_N		18 300	22 400	min^{-1}

Note: Rated values are calculated with nominal voltage and at a 22°C ambient temperature. The R_{th2} value has been reduced by 25%.

Note:

The diagram indicates the recommended speed in relation to the available torque at the output shaft for a given ambient temperature of 22°C.

The diagram shows the motor in a completely insulated as well as thermally coupled condition (R_{th2} 50% reduced).

The nominal voltage (U_N) curve shows the operating point at nominal voltage in the insulated and thermally coupled condition. Any points of operation above the curve at nominal voltage will require a higher operating voltage. Any points below the nominal voltage curve will require less voltage.

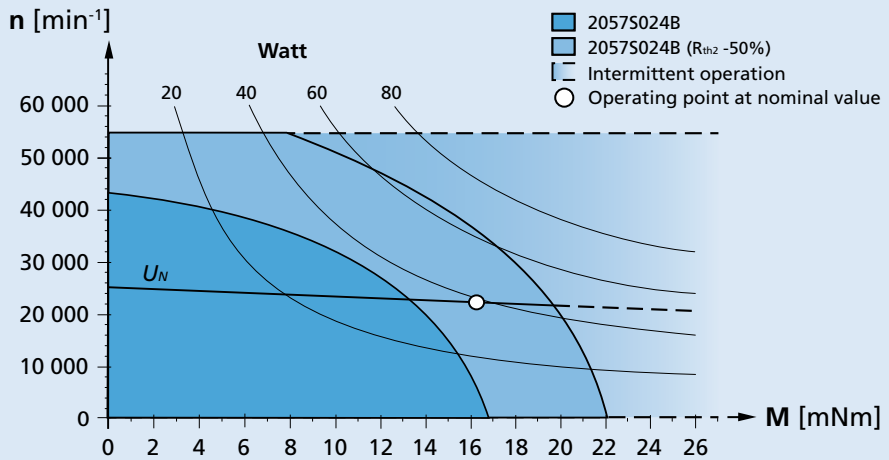

Recommended operation areas (example: nominal voltage 24V)

© DR. FRITZ FAULHABER GMBH & CO. KG
Specifications subject to change without notice.

Dimensional drawing

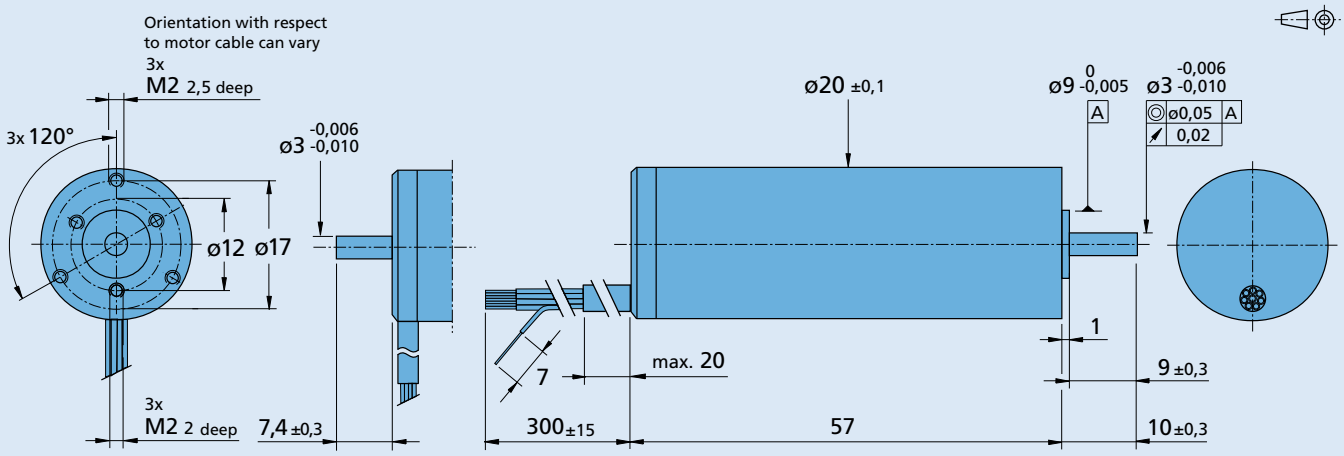

2057 S ... B - K312 **2057 S ... B**

Option, cable and connection information

Example product designation: **2057S012B-K1155**

Option	Type	Description
K1155	Controller combination	Analog Hall sensors for combination with Speed Controller SC or Motion Controller MC
K313	Encoder combination	Motor with rear end shaft for combination with Encoder IE2
K312	Encoder combination	Motor with rear end shaft for combination with Encoder HEDS/HEDL/HEDM
K179	Bearing lubrication	For vacuum of 10^{-5} Pa @ 22°C

Connection

Function	Colour
Phase C	yellow
Phase B	orange
Phase A	brown
GND	black
U_{DD} (+5V)	red
Hall sensor C	grey
Hall sensor B	blue
Hall sensor A	green

Standard cable

Single wires, material PTFE
AWG 24: Phase A/B/C
AWG 26: Hall A/B/C, U_{DD}, GND

Product combination

Precision Gearheads / Lead Screws	Encoders	Drive Electronics	Cables / Accessories
20/1R 22GPT 23/1 22L ... ML 22L ... SB 22L ... PB	IE2-1024 HEDS 5500 HEDL 5540	SC 2804 S SC 5004 P SC 5008 S MC 3603 S MC 5004 P MC 5005 S	To view our large range of accessory parts, please refer to the "Accessories" chapter.

© DR. FRITZ FAULHABER GMBH & CO. KG
Specifications subject to change without notice.

Brushless DC-Servomotors

18,7 mNm

91,2 W

2 Pole Technology, High Speed,
for Autoclave Sterilisation

Series 2057 ... BA

Values at 22°C and nominal voltage		2057 S		024 BA	
1	Nominal voltage	U_N		24	V
2	Terminal resistance, phase-phase	R		0,427	Ω
3	Efficiency, max.	$\eta_{max.}$		90	%
4	No-load speed	n_0		44 300	min^{-1}
5	No-load current, typ. (with shaft ø 3 mm)	I_0		0,178	A
6	Stall torque	M_H		309	mNm
7	Friction torque, static	C_0		0,0559	mNm
8	Friction torque, dynamic	C_V		$1{,}95 \cdot 10^{-5}$	mNm/min^{-1}
9	Speed constant	k_n		1 740	min^{-1}/V
10	Back-EMF constant	k_E		0,576	mV/min^{-1}
11	Torque constant	k_M		5,5	mNm/A
12	Current constant	k_I		0,182	A/mNm
13	Slope of n-M curve	$\Delta n/\Delta M$		135	min^{-1}/mNm
14	Terminal inductance, phase-phase	L		36,2	µH
15	Mechanical time constant	τ_m		4,2	ms
16	Rotor inertia	J		3	gcm^2
17	Angular acceleration	$\alpha_{max.}$		1 030	$\cdot 10^3 rad/s^2$
18	Thermal resistance	R_{th1} / R_{th2}	1,1 / 15		K/W
19	Thermal time constant	τ_{w1} / τ_{w2}	5 / 630		s
20	Operating temperature range:				
	– motor		-30 ... +140		°C
	– winding, max. permissible		+140		°C
21	Shaft bearings		ball bearings, preloaded		
22	Shaft load max.:				
	– with shaft diameter		3		mm
	– radial at 40 000 min^{-1} (5 mm from mounting flange)		22		N
	– axial at 40 000 min^{-1} (push only)		12		N
	– axial at standstill (push only)		75		N
23	Shaft play:				
	– radial	≤	0,05		mm
	– axial	=	0		mm
24	Housing material		stainless steel		
25	Mass		100		g
26	Direction of rotation		electronically reversible		
27	Speed up to	$n_{max.}$	65 000		min^{-1}
28	Number of pole pairs		1		
29	Hall sensors		digital		
30	Magnet material		NdFeB		

Rated values for continuous operation					
31	Rated torque	M_N		13,7	mNm
32	Rated current (thermal limit)	I_N		3	A
33	Rated speed	n_N		43 200	min^{-1}

Note: Rated values are calculated with nominal voltage and at a 22°C ambient temperature. The R_{th2} value has been reduced by 25%.

Note:

The diagram indicates the recommended speed in relation to the available torque at the output shaft for a given ambient temperature of 22°C.

The diagram shows the motor in a completely insulated as well as thermally coupled condition (R_{th2} 50% reduced).

The nominal voltage (U_N) curve shows the operating point at nominal voltage in the insulated and thermally coupled condition. Any points of operation above the curve at nominal voltage will require a higher operating voltage. Any points below the nominal voltage curve will require less voltage.

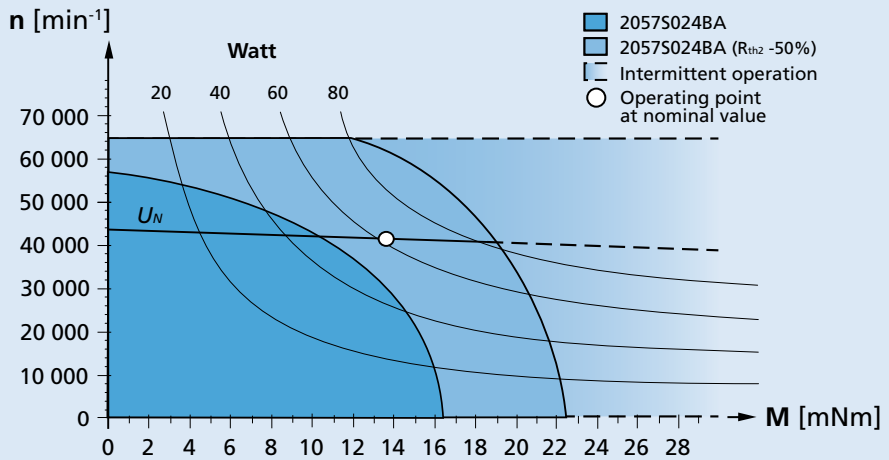

Recommended operation areas (example: nominal voltage 24V)

For notes on technical data and lifetime performance refer to "Technical Information".

Edition 2021 Dec. 03

Backwards

© DR. FRITZ FAULHABER GMBH & CO. KG
Specifications subject to change without notice.

www.faulhaber.com

Dimensional drawing

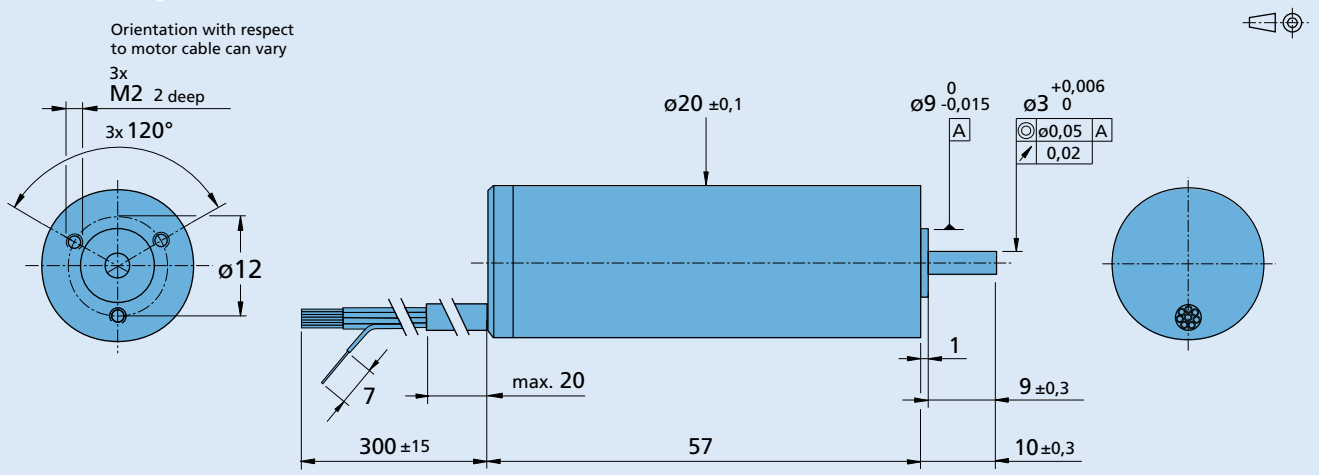

2057 S ... BA

Option, cable and connection information

Example product designation: **2057S024BA-K3825**

Option	Type	Description
K3825	Sensor	Sensorless

Connection

Function	Colour
Phase C	yellow
Phase B	orange
Phase A	brown
GND	black
U_{DD} (+5V)	red
Hall sensor C	grey
Hall sensor B	blue
Hall sensor A	green

Standard cable
Single wires, material PTFE
AWG 24: Phase A/B/C
AWG 26: Hall A/B/C, U_{DD}, GND

Autoclavable

Sterilisation Process

134°C

Reference	Description
Sterilisation conditions	134°C at ca. 3.1 bar abs., 100% RH
Holding time	18 minutes
Number of cycles, typical	1 000
Number of cycles (sensorless, K3825), typical	1 500

Contact your sales representative for more detailed information

Product combination

Precision Gearheads / Lead Screws	Encoders	Drive Electronics	Cables / Accessories
		SC 5004 P SC 5008 S	To view our large range of accessory parts, please refer to the "Accessories" chapter.

For notes on technical data and lifetime performance refer to "Technical Information".

Backwards

© DR. FRITZ FAULHABER GMBH & CO. KG
Specifications subject to change without notice.

Brushless DC-Servomotors 18 mNm

2 Pole Technology 51 W

Series 2444 ... B

Values at 22°C and nominal voltage		2444 S	024 B	048 B	
1 Nominal voltage	U_N		24	48	V
2 Terminal resistance, phase-phase	R		2	8,54	Ω
3 Efficiency, max.	$\eta_{max.}$		79	78	%
4 No-load speed	n_0		22 200	21 600	min^{-1}
5 No-load current, typ. (with shaft ø 3 mm)	I_0		0,159	0,076	A
6 Stall torque	M_H		123	118,5	mNm
7 Friction torque, static	C_0		0,746	0,746	mNm
8 Friction torque, dynamic	C_V		$3{,}87 \cdot 10^{-5}$	$3{,}87 \cdot 10^{-5}$	mNm/min^{-1}
9 Speed constant	k_n		927	450	min^{-1}/V
10 Back-EMF constant	k_E		1,08	2,22	mV/min^{-1}
11 Torque constant	k_M		10,3	21,2	mNm/A
12 Current constant	k_I		0,097	0,047	A/mNm
13 Slope of n-M curve	$\Delta n/\Delta M$		180	181	min^{-1}/mNm
14 Terminal inductance, phase-phase	L		175	740	µH
15 Mechanical time constant	τ_m		10,8	10,8	ms
16 Rotor inertia	J		5,7	5,7	gcm^2
17 Angular acceleration	$\alpha_{max.}$		216	208	$\cdot 10^3 rad/s^2$
18 Thermal resistance	R_{th1} / R_{th2}	2,4 / 11,6			K/W
19 Thermal time constant	τ_{w1} / τ_{w2}	9,6 / 470			s
20 Operating temperature range:					
– motor		-30 ... +125			°C
– winding, max. permissible		+125			°C
21 Shaft bearings		ball bearings, preloaded			
22 Shaft load max.:					
– with shaft diameter		3			mm
– radial at 3 000 min^{-1} (5 mm from mounting flange)		31			N
– axial at 3 000 min^{-1} (push only)		16			N
– axial at standstill (push only)		57			N
23 Shaft play:					
– radial	≤	0,015			mm
– axial	=	0			mm
24 Housing material		aluminium, black anodized			
25 Mass		98			g
26 Direction of rotation		electronically reversible			
27 Speed up to	$n_{max.}$	45 000			min^{-1}
28 Number of pole pairs		1			
29 Hall sensors		digital			
30 Magnet material		SmCo			

Rated values for continuous operation					
31 Rated torque	M_N		14,2	14,3	mNm
32 Rated current (thermal limit)	I_N		1,58	0,772	A
33 Rated speed	n_N		18 800	18 100	min^{-1}

Note: Rated values are calculated with nominal voltage and at a 22°C ambient temperature. The R_{th2} value has been reduced by 25%.

Note:

The diagram indicates the recommended speed in relation to the available torque at the output shaft for a given ambient temperature of 22°C.

The diagram shows the motor in a completely insulated as well as thermally coupled condition (R_{th2} 50% reduced).

The nominal voltage (U_N) curve shows the operating point at nominal voltage in the insulated and thermally coupled condition. Any points of operation above the curve at nominal voltage will require a higher operating voltage. Any points below the nominal voltage curve will require less voltage.

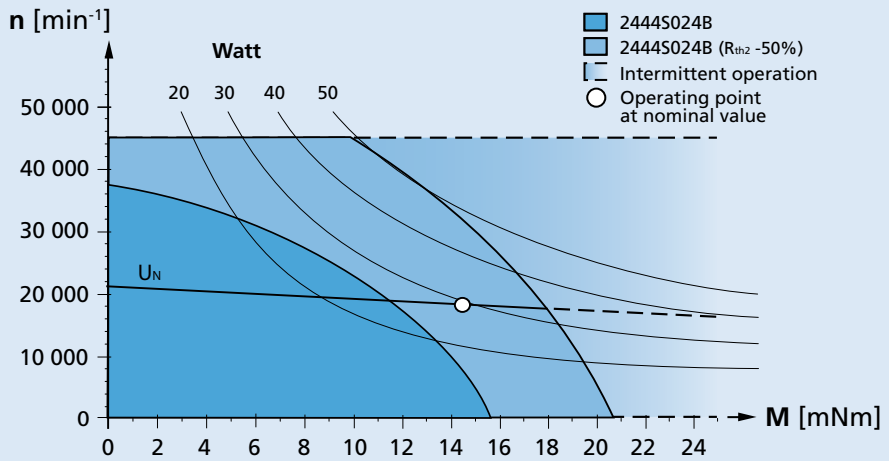

Recommended operation areas (example: nominal voltage 24V)

© DR. FRITZ FAULHABER GMBH & CO. KG
Specifications subject to change without notice.

Dimensional drawing

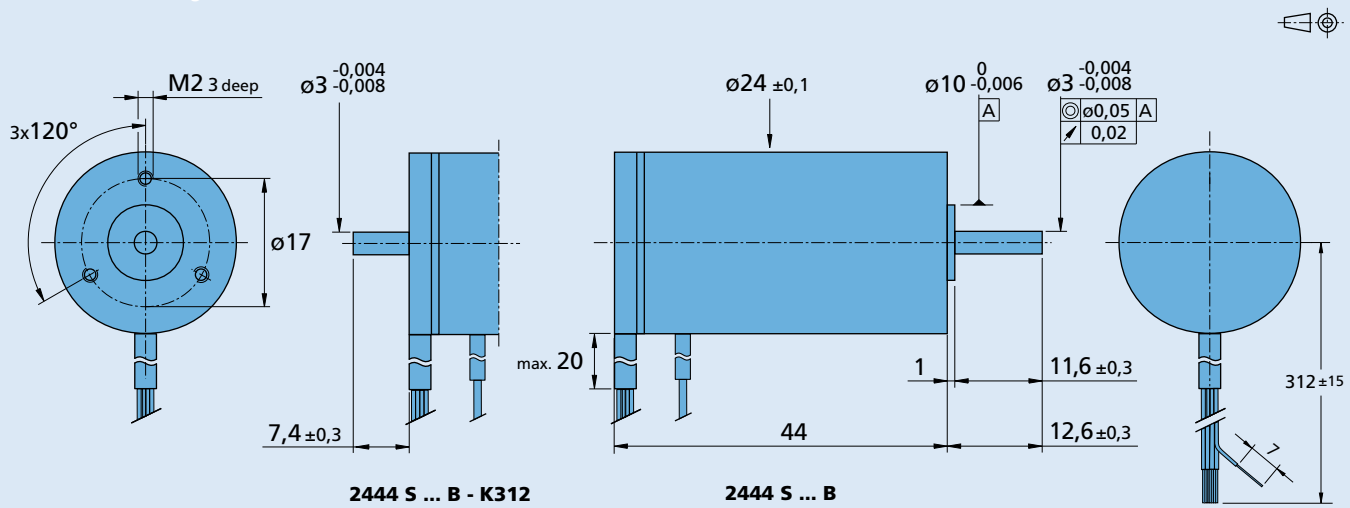

Option, cable and connection information

Example product designation: **2444S024B-K1155**

Option	Type	Description
K1155	Controller combination	Analog Hall sensors for combination with Speed Controller SC or Motion Controller MC
K1026	Sensorless	Motor without Hall sensors
K1555	Lead wires length	Single lead wires 750 mm long in PTFE
K903	Lead wires length	Single lead wires 1000 mm long in PTFE
K1838	Encoder combination	Motor with rear end shaft for combination with Encoder IE3
K313	Encoder combination	Motor with rear end shaft for combination with Encoder IE2
K312	Encoder combination	Motor with rear end shaft for combination with Encoder HEDS/HEDL/HEDM
K3051	Encoder combination	Motor with rear end shaft for combination with Encoder AES
K179	Bearing lubrication	For vacuum of 10^{-5} Pa @ 22°C

Connection

Function	Colour
Phase C	yellow
Phase B	orange
Phase A	brown
GND	black
U_{DD} (+5V)	red
Hall sensor C	grey
Hall sensor B	blue
Hall sensor A	green

Standard cable

Single wires, material PTFE
AWG 24: Phase A/B/C
AWG 26: Hall A/B/C, U_{DD}, GND

Product combination

Precision Gearheads / Lead Screws	Encoders	Drive Electronics	Cables / Accessories
22GPT	HEDS 5500	SC 2402 P	MBZ
22/7	IE3-1024	SC 2804 S	
23/1	IE3-1024 L	SC 5004 P	To view our large range of accessory parts, please refer to the “Accessories” chapter.
26/1R	HEDL 5540	SC 5008 S	
30/1	AEMT-12/16 L	MC 3001 B	
30/1 S	AES-4096 L	MC 3001 P	
22L ... ML		MC 3603 S	
22L ... SB		MC 5004 P	
22L ... PB		MC 5005 S	

© DR. FRITZ FAULHABER GMBH & CO. KG
Specifications subject to change without notice.

Brushless DC-Servomotors 33 mNm

2 Pole Technology 71 W

Series 3056 ... B

Values at 22°C and nominal voltage		3056 K	012 B	024 B	036 B	048 B	
1 Nominal voltage	U_N		12	24	36	48	V
2 Terminal resistance, phase-phase	R		1,5	6,4	12,3	23,6	Ω
3 Efficiency, max.	$\eta_{max.}$		76	77	77	76	%
4 No-load speed	n_0		8 800	8 100	8 900	8 900	min^{-1}
5 No-load current, typ. (with shaft ø 4 mm)	I_0		0,128	0,057	0,044	0,033	A
6 Stall torque	M_H		102	104	111	103	mNm
7 Friction torque, static	C_0		0,81	0,81	0,81	0,81	mNm
8 Friction torque, dynamic	C_V		$9{,}5 \cdot 10^{-5}$	$9{,}5 \cdot 10^{-5}$	$9{,}5 \cdot 10^{-5}$	$9{,}5 \cdot 10^{-5}$	mNm/min^{-1}
9 Speed constant	k_n		742	343	251	188	min^{-1}/V
10 Back-EMF constant	k_E		1,35	2,91	3,99	5,32	mV/min^{-1}
11 Torque constant	k_M		12,9	27,8	38,1	50,8	mNm/A
12 Current constant	k_I		0,078	0,036	0,026	0,02	A/mNm
13 Slope of n-M curve	$\Delta n/\Delta M$		87	79	81	87	min^{-1}/mNm
14 Terminal inductance, phase-phase	L		160	740	1 400	2 600	µH
15 Mechanical time constant	τ_m		13,6	12,4	12,7	13,7	ms
16 Rotor inertia	J		15	15	15	15	gcm^2
17 Angular acceleration	$\alpha_{max.}$		68	69	74	68	$\cdot 10^3 rad/s^2$
18 Thermal resistance	R_{th1} / R_{th2}	2,2 / 7,9					K/W
19 Thermal time constant	τ_{w1} / τ_{w2}	11,7 / 650					s
20 Operating temperature range:							
– motor		-30 ... +125					°C
– winding, max. permissible		+125					°C
21 Shaft bearings		ball bearings, preloaded					
22 Shaft load max.:							
– with shaft diameter		4					mm
– radial at 3 000 min^{-1} (5 mm from mounting flange)		75					N
– axial at 3 000 min^{-1} (push only)		18					N
– axial at standstill (push only)		62					N
23 Shaft play:							
– radial	≤	0,015					mm
– axial	=	0					mm
24 Housing material		aluminium, black anodized					
25 Mass		192					g
26 Direction of rotation		electronically reversible					
27 Speed up to	$n_{max.}$	35 000					min^{-1}
28 Number of pole pairs		1					
29 Hall sensors		digital					
30 Magnet material		SmCo					
Rated values for continuous operation							
31 Rated torque	M_N		28,5	30	29,4	28,3	mNm
32 Rated current (thermal limit)	I_N		2,4	1,17	0,838	0,605	A
33 Rated speed	n_N		5 340	4 820	5 600	5 450	min^{-1}

Note: Rated values are calculated with nominal voltage and at a 22°C ambient temperature. The R_{th2} value has been reduced by 25%.

Note:

The diagram indicates the recommended speed in relation to the available torque at the output shaft for a given ambient temperature of 22°C.

The diagram shows the motor in a completely insulated as well as thermally coupled condition (R_{th2} 50% reduced).

The nominal voltage (U_N) curve shows the operating point at nominal voltage in the insulated and thermally coupled condition. Any points of operation above the curve at nominal voltage will require a higher operating voltage. Any points below the nominal voltage curve will require less voltage.

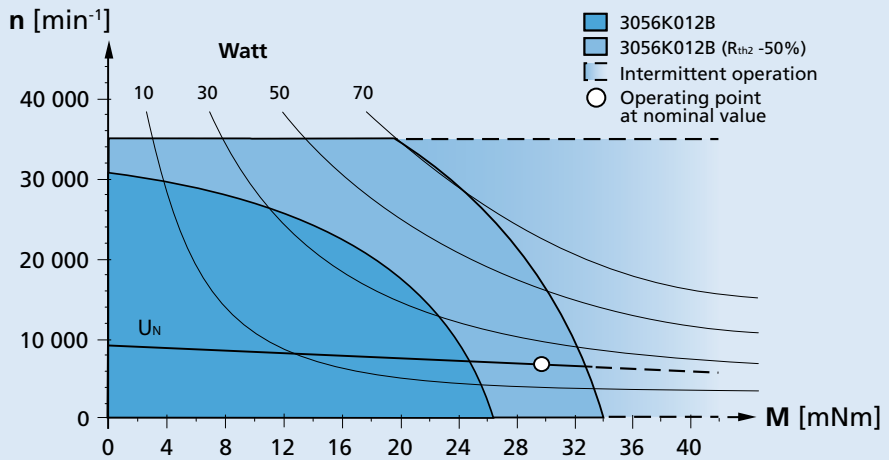

Recommended operation areas (example: nominal voltage 12V)

For notes on technical data and lifetime performance refer to "Technical Information".

Edition 2023 Nov. 27

Backwards

© DR. FRITZ FAULHABER GMBH & CO. KG
Specifications subject to change without notice.

Dimensional drawing

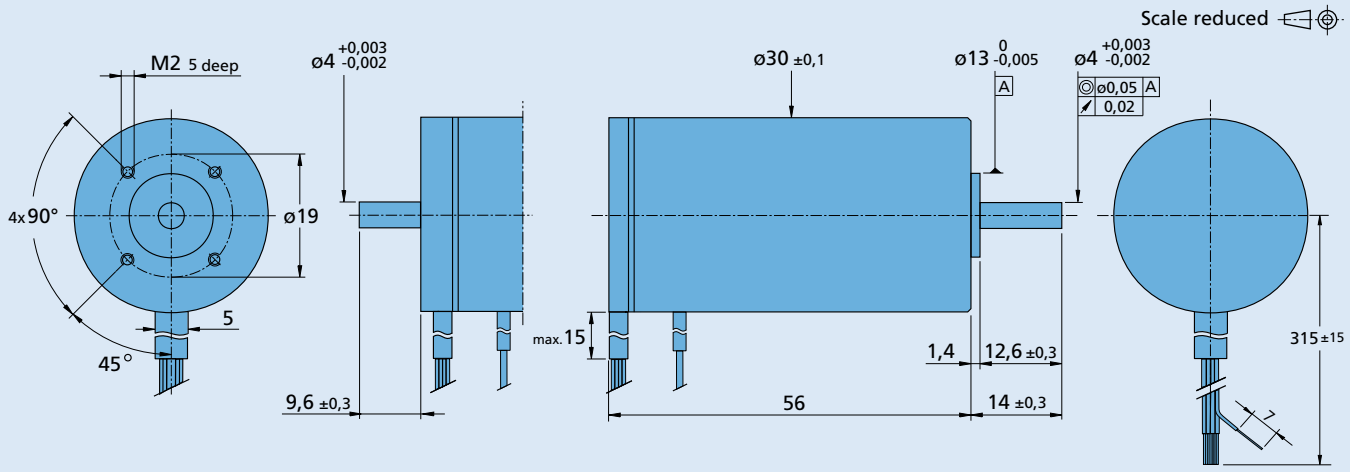

Option, cable and connection information

Example product designation: **3056K012B-K1155**

Option	Type	Description
K1155	Controller combination	Analog Hall sensors for combination with Speed Controller SC or Motion Controller MC
K1026	Sensorless	Motor without Hall sensors
K1555	Lead wires length	Single lead wires 750 mm long in PTFE
K1838	Encoder combination	Motor with rear end shaft for combination with Encoder IE3
K312	Encoder combination	Motor with rear end shaft for combination with Encoder HEDS/HEDL/HEDM
K3051	Encoder combination	Motor with rear end shaft for combination with Encoder AES
K179	Bearing lubrication	For vacuum of 10^{-5} Pa @ 22°C

Connection

Function	Colour
Phase C	yellow
Phase B	orange
Phase A	brown
GND	black
U_{DD} (+5V)	red
Hall sensor C	grey
Hall sensor B	blue
Hall sensor A	green

Standard cable

Single wires, material PTFE
AWG 20: Phase A/B/C
AWG 26: Hall A/B/C, U_{DD}, GND

Product combination

Precision Gearheads / Lead Screws	Encoders	Drive Electronics	Cables / Accessories
30/1	HEDS 5500	SC 2402 P	MBZ
30/1 S	IE3-1024	SC 2804 S	
32GPT	IE3-1024 L	SC 5004 P	To view our large range of accessory parts, please refer to the "Accessories" chapter.
38/1	HEDL 5540	SC 5008 S	
38/1 S	AEMT-12/16 L	MC 3001 B	
38/2	AES-4096 L	MC 3001 P	
38/2 S		MC 3603 S	
32L ... TL		MC 5004 P	
32L ... ML		MC 5005 S	
32L ... SB			
32L ... PB			

© DR. FRITZ FAULHABER GMBH & CO. KG
Specifications subject to change without notice.

Brushless DC-Servomotors — 66 mNm

2 Pole Technology — 126 W

Series 3564 ... B

Values at 22°C and nominal voltage		3564 K	012 B	024 B	036 B	048 B	
1 Nominal voltage	U_N		12	24	36	48	V
2 Terminal resistance, phase-phase	R		0,56	1,1	2,61	4,1	Ω
3 Efficiency, max.	$\eta_{max.}$		82	83	83	83	%
4 No-load speed	n_0		8 300	11 500	11 600	12 800	min^{-1}
5 No-load current, typ. (with shaft ø 4 mm)	I_0		0,198	0,166	0,112	0,099	A
6 Stall torque	M_H		293	432	408	418	mNm
7 Friction torque, static	C_0		1,2	1,2	1,2	1,2	mNm
8 Friction torque, dynamic	C_V		$1{,}8 \cdot 10^{-4}$	$1{,}8 \cdot 10^{-4}$	$1{,}8 \cdot 10^{-4}$	$1{,}8 \cdot 10^{-4}$	mNm/min^{-1}
9 Speed constant	k_n		696	481	323	266	min^{-1}/V
10 Back-EMF constant	k_E		1,44	2,08	3,1	3,75	mV/min^{-1}
11 Torque constant	k_M		13,7	19,9	29,6	35,8	mNm/A
12 Current constant	k_I		0,073	0,05	0,034	0,028	A/mNm
13 Slope of n-M curve	$\Delta n/\Delta M$		28	27	28	31	min^{-1}/mNm
14 Terminal inductance, phase-phase	L		90	190	410	640	µH
15 Mechanical time constant	τ_m		10,4	9,7	10,4	11,1	ms
16 Rotor inertia	J		34,9	34,9	34,9	34,9	gcm^2
17 Angular acceleration	$\alpha_{max.}$		84	124	117	120	$\cdot 10^3 rad/s^2$
18 Thermal resistance	R_{th1} / R_{th2}	1,6 / 6,2					K/W
19 Thermal time constant	τ_{w1} / τ_{w2}	15,4 / 820					s
20 Operating temperature range:							
– motor		-30 ... +125					°C
– winding, max. permissible		+125					°C
21 Shaft bearings		ball bearings, preloaded					
22 Shaft load max.:							
– with shaft diameter		4					mm
– radial at 3 000 min^{-1} (5 mm from mounting flange)		112					N
– axial at 3 000 min^{-1} (push only)		50					N
– axial at standstill (push only)		131					N
23 Shaft play:							
– radial	≤	0,015					mm
– axial	=	0					mm
24 Housing material		aluminium, black anodized					
25 Mass		311					g
26 Direction of rotation		electronically reversible					
27 Speed up to	$n_{max.}$	29 000					min^{-1}
28 Number of pole pairs		1					
29 Hall sensors		digital					
30 Magnet material		SmCo					
Rated values for continuous operation							
31 Rated torque	M_N		56,2	55,3	53,5	50,4	mNm
32 Rated current (thermal limit)	I_N		4,43	3,04	1,98	1,55	A
33 Rated speed	n_N		6 160	9 620	9 640	10 800	min^{-1}

Note: Rated values are calculated with nominal voltage and at a 22°C ambient temperature. The R_{th2} value has been reduced by 25%.

Note:

The diagram indicates the recommended speed in relation to the available torque at the output shaft for a given ambient temperature of 22°C.

The diagram shows the motor in a completely insulated as well as thermally coupled condition (R_{th2} 50% reduced).

The nominal voltage (U_N) curve shows the operating point at nominal voltage in the insulated and thermally coupled condition. Any points of operation above the curve at nominal voltage will require a higher operating voltage. Any points below the nominal voltage curve will require less voltage.

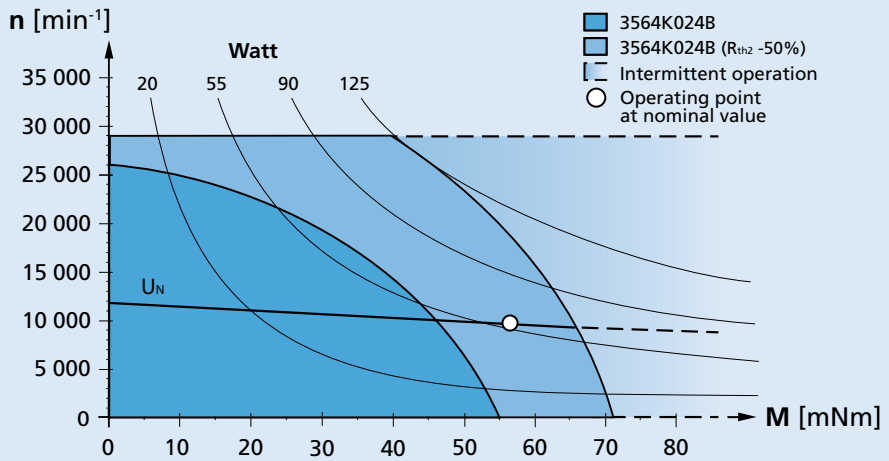

Recommended operation areas (example: nominal voltage 24V)

For notes on technical data and lifetime performance refer to "Technical Information".

Backwards

© DR. FRITZ FAULHABER GMBH & CO. KG
Specifications subject to change without notice.

Dimensional drawing

Scale reduced

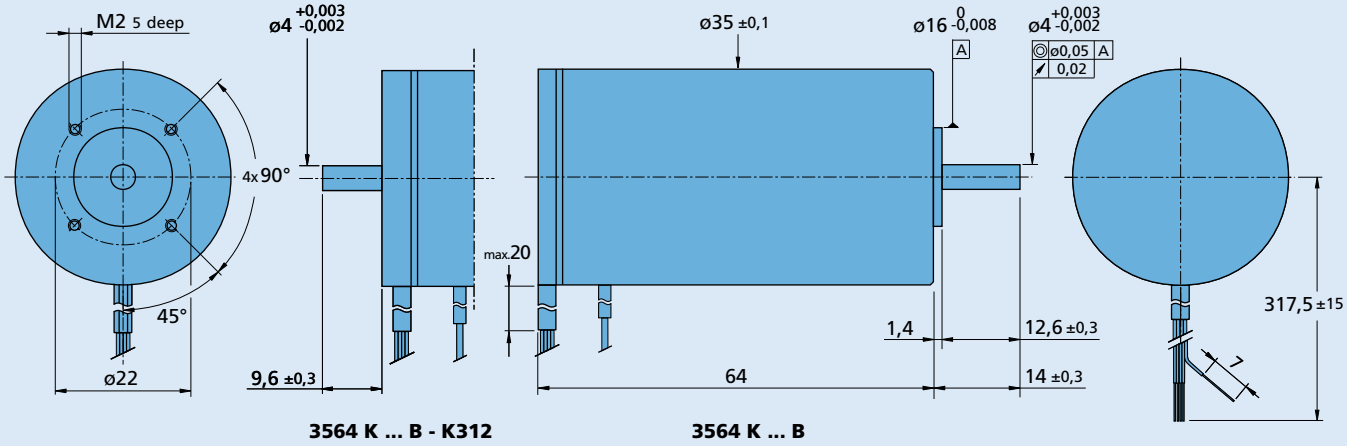

Option, cable and connection information

Example product designation: **3564K012B-K1155**

Option	Type	Description
K1155	Controller combination	Analog Hall sensors for combination with Speed Controller SC or Motion Controller MC
K1026	Sensorless	Motor without Hall sensors
K1838	Encoder combination	Motor with rear end shaft for combination with Encoder IE3
K312	Encoder combination	Motor with rear end shaft for combination with Encoder HEDS/HEDL/HEDM
K3051	Encoder combination	Motor with rear end shaft for combination with Encoder AES
K179	Bearing lubrication	For vacuum of 10^{-5} Pa @ 22°C

Connection

Function	Colour
Phase C	yellow
Phase B	orange
Phase A	brown
GND	black
U_{DD} (+5V)	red
Hall sensor C	grey
Hall sensor B	blue
Hall sensor A	green

Standard cable

Single wires, material PTFE

AWG 20: Phase A/B/C

AWG 26: Hall A/B/C, U_{DD}, GND

Product combination

Precision Gearheads / Lead Screws	Encoders	Drive Electronics	Cables / Accessories
30/1	HEDS 5500	SC 2804 S	MBZ
30/1 S	IE3-1024	SC 5004 P	
32GPT	IE3-1024 L	SC 5008 S	To view our large range of accessory parts, please refer to the “Accessories” chapter.
32/3R	HEDL 5540	MC 5005 S	
38/1	AEMT-12/16 L	MC 5010 S	
38/1 S	AES-4096 L		
38/2			
38/2 S			
42GPT			
32L ... TL			
32L ... ML			
32L ... SB			
32L ... PB			

© DR. FRITZ FAULHABER GMBH & CO. KG
Specifications subject to change without notice.

Brushless DC-Servomotors 190 mNm

2 Pole Technology 232 W

Series 4490 ... B

Values at 22°C and nominal voltage		4490 H	024 B	036 B	048 B	
1 Nominal voltage	U_N		24	36	48	V
2 Terminal resistance, phase-phase	R		0,22	0,44	0,7	Ω
3 Efficiency, max.	$\eta_{max.}$		87	87	87	%
4 No-load speed	n_0		9 700	10 400	10 800	min^{-1}
5 No-load current, typ. (with shaft ø 6 mm)	I_0		0,527	0,397	0,317	A
6 Stall torque	M_H		2 635	2 760	2 978	mNm
7 Friction torque, static	C_0		4,96	4,96	4,96	mNm
8 Friction torque, dynamic	C_V		$7{,}72 \cdot 10^{-4}$	$7{,}72 \cdot 10^{-4}$	$7{,}72 \cdot 10^{-4}$	mNm/min^{-1}
9 Speed constant	k_n		395	283	220	min^{-1}/V
10 Back-EMF constant	k_E		2,53	3,54	4,56	mV/min^{-1}
11 Torque constant	k_M		24,2	33,8	43,5	mNm/A
12 Current constant	k_I		0,041	0,03	0,023	A/mNm
13 Slope of n-M curve	$\Delta n/\Delta M$		3,6	3,7	3,5	min^{-1}/mNm
14 Terminal inductance, phase-phase	L		73	142	235	µH
15 Mechanical time constant	τ_m		4,9	5	4,8	ms
16 Rotor inertia	J		130	130	130	gcm^2
17 Angular acceleration	$\alpha_{max.}$		203	212	229	$\cdot 10^3 rad/s^2$
18 Thermal resistance	R_{th1} / R_{th2}	0,96 / 3,9				K/W
19 Thermal time constant	τ_{w1} / τ_{w2}	23 / 1 222				s
20 Operating temperature range:						
– motor		-30 ... +125				°C
– winding, max. permissible		+125				°C
21 Shaft bearings		ball bearings, preloaded				
22 Shaft load max.:						
– with shaft diameter		6				mm
– radial at 3 000 min^{-1} (5 mm from mounting flange)		113				N
– axial at 3 000 min^{-1} (push only)		45				N
– axial at standstill (push only)		135				N
23 Shaft play:						
– radial	≤	0,015				mm
– axial	=	0				mm
24 Housing material		aluminium, black anodized				
25 Mass		742				g
26 Direction of rotation		electronically reversible				
27 Speed up to	$n_{max.}$	18 000				min^{-1}
28 Number of pole pairs		1				
29 Hall sensors		digital				
30 Magnet material		NdFeB				

Rated values for continuous operation						
31 Rated torque	M_N		148	139	137	mNm
32 Rated current (thermal limit)	I_N		7,45	5,06	3,91	A
33 Rated speed	n_N		9 650	10 470	10 930	min^{-1}

Note: Rated values are calculated with nominal voltage and at a 22°C ambient temperature. The R_{th2} value has been reduced by 25%.

Note:

The diagram indicates the recommended speed in relation to the available torque at the output shaft for a given ambient temperature of 22°C.

The diagram shows the motor in a completely insulated as well as thermally coupled condition (R_{th2} 50% reduced).

The nominal voltage (U_N) curve shows the operating point at nominal voltage in the insulated and thermally coupled condition. Any points of operation above the curve at nominal voltage will require a higher operating voltage. Any points below the nominal voltage curve will require less voltage.

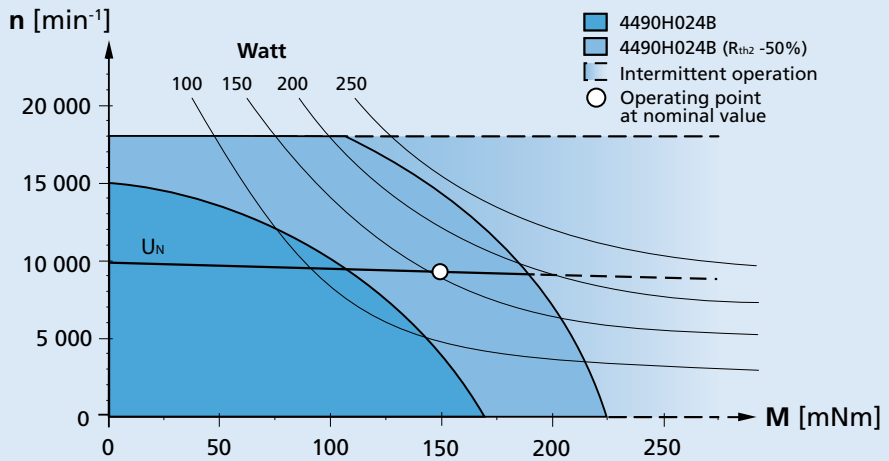

Recommended operation areas (example: nominal voltage 24 V)

For notes on technical data and lifetime performance refer to "Technical Information".

Backwards

© DR. FRITZ FAULHABER GMBH & CO. KG
Specifications subject to change without notice.

Dimensional drawing

Scale reduced

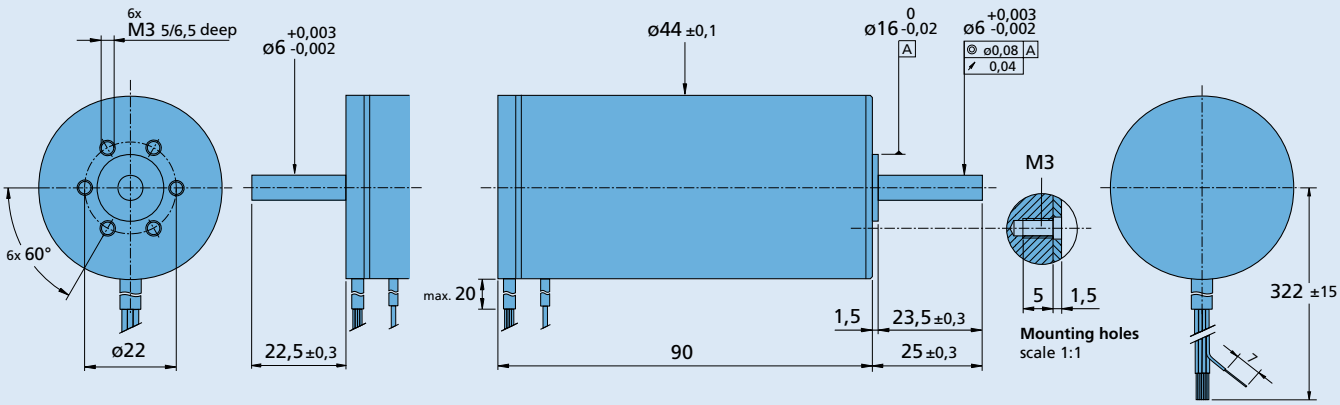

4490 H ... B - K312 **4490 H ... B**

Option, cable and connection information

Example product designation: **4490H024B-K1155**

Option	Type	Description
K1155	Controller combination	Analog Hall sensors for combination with Speed Controller SC or Motion Controller MC
K1026	Sensorless	Motor without Hall sensors
K1838	Encoder combination	Motor with rear end shaft for combination with Encoder IE3
K312	Encoder combination	Motor with rear end shaft for combination with Encoder HEDS/HEDL/HEDM
K3051	Encoder combination	Motor with rear end shaft for combination with Encoder AES
K179	Bearing lubrication	For vacuum of 10^{-5} Pa @ 22°C

Connection

Function	Colour
Phase C	yellow
Phase B	orange
Phase A	brown
GND	black
U_{DD} (+5V)	red
Hall sensor C	grey
Hall sensor B	blue
Hall sensor A	green

Standard cable

Single wires, material PTFE
AWG 16: Phase A/B/C
AWG 26: Hall A/B/C, U_{DD}, GND

Product combination

Precision Gearheads / Lead Screws	Encoders	Drive Electronics	Cables / Accessories
42GPT 44/1	HEDS 5500 IE3-1024 IE3-1024 L HEDL 5540 AEMT-12/16 L AES-4096 L	SC 5004 P SC 5008 S MC 5010 S	MBZ To view our large range of accessory parts, please refer to the “Accessories” chapter.

© DR. FRITZ FAULHABER GMBH & CO. KG
Specifications subject to change without notice.

Brushless DC-Servomotors 217 mNm

2 Pole Technology 282 W

Series 4490 ... BS

Values at 22°C and nominal voltage		4490 H	024 BS	036 BS	048 BS	
1 Nominal voltage	U_N		24	36	48	V
2 Terminal resistance, phase-phase	R		0,66	1,31	2,1	Ω
3 Efficiency, max.	$\eta_{max.}$		87	87	88	%
4 No-load speed	n_0		5 500	5 900	6 100	min^{-1}
5 No-load current, typ. (with shaft ø 6 mm)	I_0		0,161	0,119	0,094	A
6 Stall torque	M_H		1 523	1 612	1 724	mNm
7 Friction torque, static	C_0		3,86	3,86	3,86	mNm
8 Friction torque, dynamic	C_V		$5{,}2 \cdot 10^{-4}$	$5{,}2 \cdot 10^{-4}$	$5{,}2 \cdot 10^{-4}$	mNm/min^{-1}
9 Speed constant	k_n		227	162	126	min^{-1}/V
10 Back-EMF constant	k_E		4,4	6,16	7,92	mV/min^{-1}
11 Torque constant	k_M		42	58,8	75,6	mNm/A
12 Current constant	k_I		0,024	0,017	0,013	A/mNm
13 Slope of n-M curve	$\Delta n/\Delta M$		3,6	3,6	3,5	min^{-1}/mNm
14 Terminal inductance, phase-phase	L		219	430	711	µH
15 Mechanical time constant	τ_m		4,9	4,9	4,8	ms
16 Rotor inertia	J		130	130	130	gcm^2
17 Angular acceleration	$\alpha_{max.}$		117	124	133	$\cdot 10^3 rad/s^2$
18 Thermal resistance	R_{th1} / R_{th2}	0,96 / 3,9				K/W
19 Thermal time constant	τ_{w1} / τ_{w2}	23 / 1 222				s
20 Operating temperature range:						
– motor		-30 ... +125				°C
– winding, max. permissible		+125				°C
21 Shaft bearings		ball bearings, preloaded				
22 Shaft load max.:						
– with shaft diameter		6				mm
– radial at 3 000 min^{-1} (5 mm from mounting flange)		113				N
– axial at 3 000 min^{-1} (push only)		45				N
– axial at standstill (push only)		135				N
23 Shaft play:						
– radial	≤	0,015				mm
– axial	=	0				mm
24 Housing material		aluminium, black anodized				
25 Mass		742				g
26 Direction of rotation		electronically reversible				
27 Speed up to	$n_{max.}$	16 000				min^{-1}
28 Number of pole pairs		1				
29 Hall sensors		digital				
30 Magnet material		NdFeB				

Rated values for continuous operation						
31 Rated torque	M_N		183	181	183	mNm
32 Rated current (thermal limit)	I_N		5,1	3,59	2,83	A
33 Rated speed	n_N		4 940	5 380	5 650	min^{-1}

Note: Rated values are calculated with nominal voltage and at a 22°C ambient temperature. The R_{th2} value has been reduced by 25%.

Note:

The diagram indicates the recommended speed in relation to the available torque at the output shaft for a given ambient temperature of 22°C.

The diagram shows the motor in a completely insulated as well as thermally coupled condition (R_{th2} 50% reduced).

The nominal voltage (U_N) curve shows the operating point at nominal voltage in the insulated and thermally coupled condition. Any points of operation above the curve at nominal voltage will require a higher operating voltage. Any points below the nominal voltage curve will require less voltage.

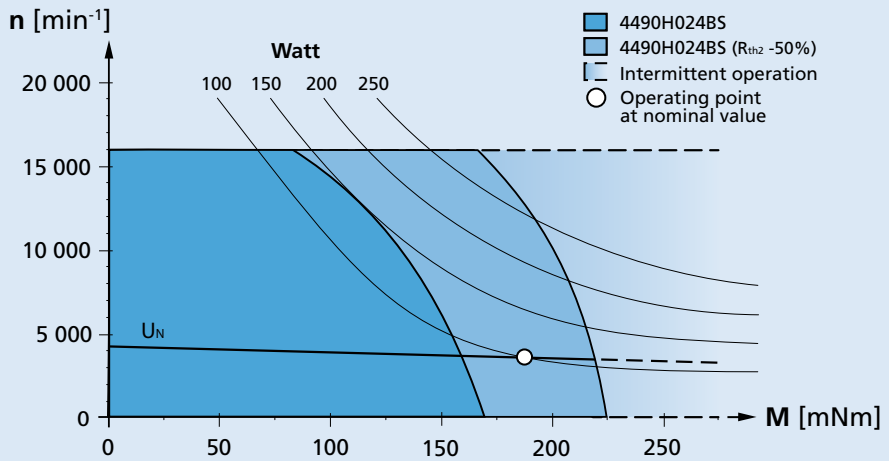

Recommended operation areas (example: nominal voltage 24 V)

For notes on technical data and lifetime performance refer to "Technical Information".

Edition 2023 Nov. 27

Backwards

© DR. FRITZ FAULHABER GMBH & CO. KG
Specifications subject to change without notice.

Dimensional drawing

Scale reduced

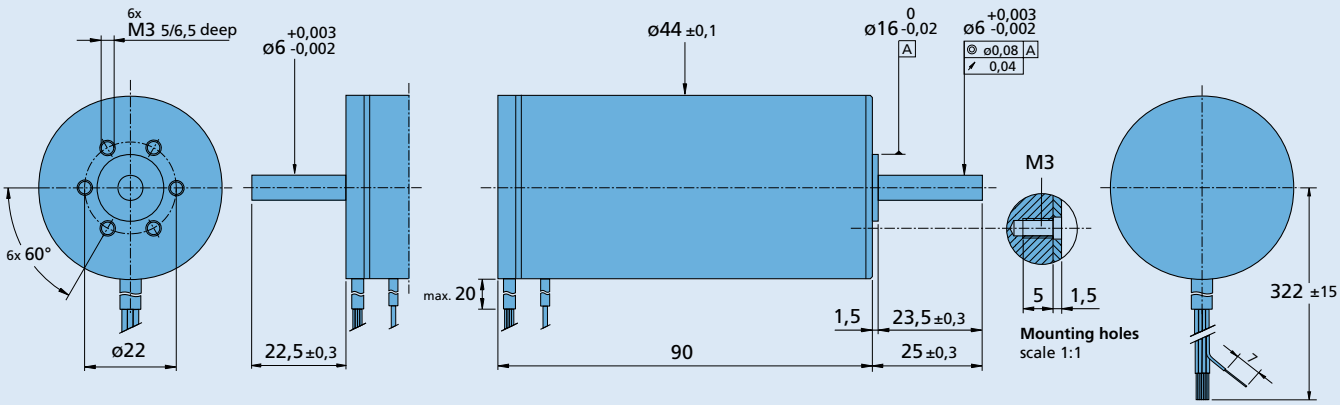

4490 H ... BS - K312 **4490 H ... BS**

Option, cable and connection information

Example product designation: **4490H024BS-K1155**

Option	Type	Description
K1155	Controller combination	Analog Hall sensors for combination with Speed Controller SC or Motion Controller MC
K1026	Sensorless	Motor without Hall sensors
K1838	Encoder combination	Motor with rear end shaft for combination with Encoder IE3
K312	Encoder combination	Motor with rear end shaft for combination with Encoder HEDS/HEDL/HEDM
K3051	Encoder combination	Motor with rear end shaft for combination with Encoder AES
K179	Bearing lubrication	For vacuum of 10^{-5} Pa @ 22°C

Connection

Function	Colour
Phase C	yellow
Phase B	orange
Phase A	brown
GND	black
U_{DD} (+5V)	red
Hall sensor C	grey
Hall sensor B	blue
Hall sensor A	green

Standard cable

Single wires, material PTFE

AWG 16: Phase A/B/C

AWG 26: Hall A/B/C, U_{DD}, GND

Product combination

Precision Gearheads / Lead Screws	Encoders	Drive Electronics	Cables / Accessories
42GPT 44/1	HEDS 5500 IE3-1024 IE3-1024 L HEDL 5540 AEMT-12/16 L AES-4096 L	SC 5004 P SC 5008 S MC 5010 S	MBZ To view our large range of accessory parts, please refer to the “Accessories” chapter.

© DR. FRITZ FAULHABER GMBH & CO. KG
Specifications subject to change without notice.

FAULHABER BHx

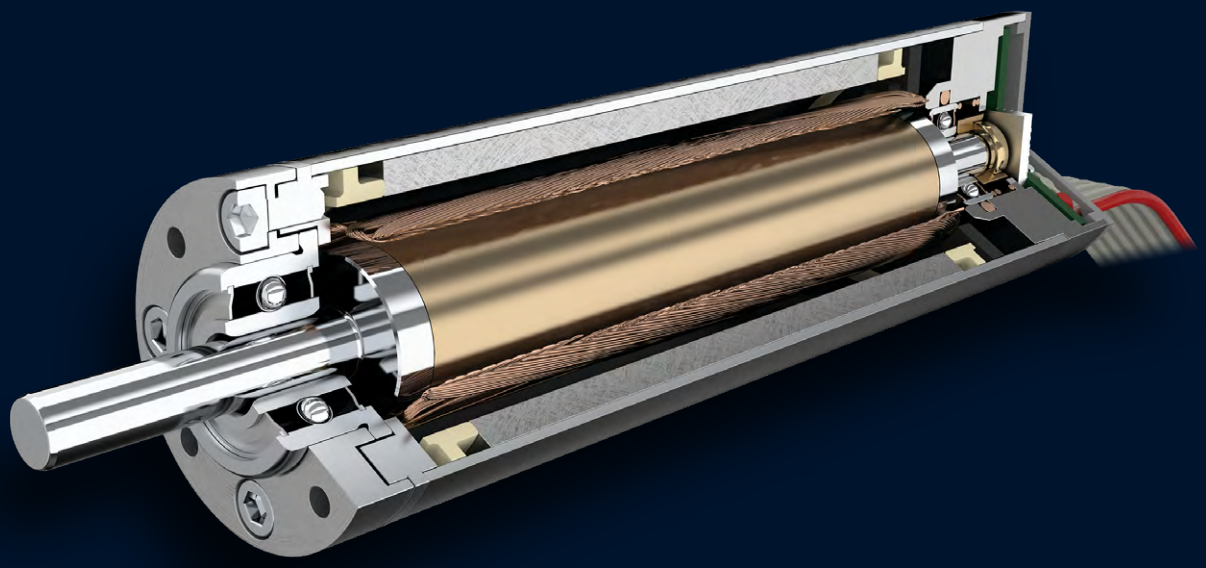

FAULHABER BHx

1645...BHS	with integrated Hall Sensors	8 mNm
1660...BHS	with integrated Hall Sensors	15.9 mNm
1660...BHT	with integrated Hall Sensors	18.7 mNm

Backwards

Brushless DC-Servomotors — 8 mNm

2 Pole Technology — 58,5 W

Series 1645 ... BHS

Values at 22°C and nominal voltage		1645 S		024 BHS	036 BHS	048 BHS	
1	Nominal voltage	U_N		24	36	48	V
2	Terminal resistance, phase-phase	R		0,684	1,51	2,81	Ω
3	Efficiency, max.	$\eta_{max.}$		90	90	90	%
4	No-load speed	n_0		62 000	62 900	61 400	min^{-1}
5	No-load current, typ. (with shaft ø 3 mm)	I_0		0,0988	0,0674	0,0486	A
6	Stall torque	M_H		137	138	135	mNm
7	Friction torque, static	C_0		0,114	0,114	0,114	mNm
8	Friction torque, dynamic	C_V		$4{,}49 \cdot 10^{-6}$	$4{,}49 \cdot 10^{-6}$	$4{,}49 \cdot 10^{-6}$	mNm/min^{-1}
9	Speed constant	k_n		2 450	1 650	1 210	min^{-1}/V
10	Back-EMF constant	k_E		0,409	0,606	0,825	mV/min^{-1}
11	Torque constant	k_M		3,9	5,79	7,88	mNm/A
12	Current constant	k_I		0,256	0,173	0,127	A/mNm
13	Slope of n-M curve	$\Delta n/\Delta M$		429	431	432	min^{-1}/mNm
14	Terminal inductance, phase-phase	L		46	103	190	µH
15	Mechanical time constant	τ_m		2,6	2,6	2,7	ms
16	Rotor inertia	J		0,59	0,59	0,59	gcm^2
17	Angular acceleration	$\alpha_{max.}$		2 330	2 350	2 300	$\cdot 10^3 rad/s^2$
18	Thermal resistance	R_{th1} / R_{th2}	3,1 / 22				K/W
19	Thermal time constant	τ_{w1} / τ_{w2}	6,5 / 580				s
20	Operating temperature range:						
	– motor		-30 ... +125				°C
	– winding, max. permissible		+125				°C
21	Shaft bearings		ball bearings, preloaded				
22	Shaft load max.:						
	– with shaft diameter		3				mm
	– radial at 40 000 min^{-1} (5 mm from mounting flange)		18				N
	– axial at 40 000 min^{-1} (push only)		9				N
	– axial at standstill (push only)		44				N
23	Shaft play:						
	– radial	≤	0,01				mm
	– axial	=	0				mm
24	Housing material		stainless steel				
25	Mass		58,2				g
26	Direction of rotation		electronically reversible				
27	Speed up to	$n_{max.}$	100 000				min^{-1}
28	Number of pole pairs		1				
29	Hall sensors		digital				
30	Magnet material		NdFeB				

Rated values for continuous operation							
31	Rated torque	M_N		6,09	6,02	6,1	mNm
32	Rated current (thermal limit)	I_N		1,86	1,24	0,924	A
33	Rated speed	n_N		61 300	62 100	60 600	min^{-1}

Note: Rated values are calculated with nominal voltage and at a 22°C ambient temperature. The R_{th2} value has been reduced by 25%.

Note:

The diagram indicates the recommended speed in relation to the available torque at the output shaft for a given ambient temperature of 22°C.

The diagram shows the motor in a completely insulated as well as thermally coupled condition (R_{th2} 50% reduced).

The nominal voltage (U_N) curve shows the operating point at nominal voltage in the insulated and thermally coupled condition. Any points of operation above the curve at nominal voltage will require a higher operating voltage. Any points below the nominal voltage curve will require less voltage.

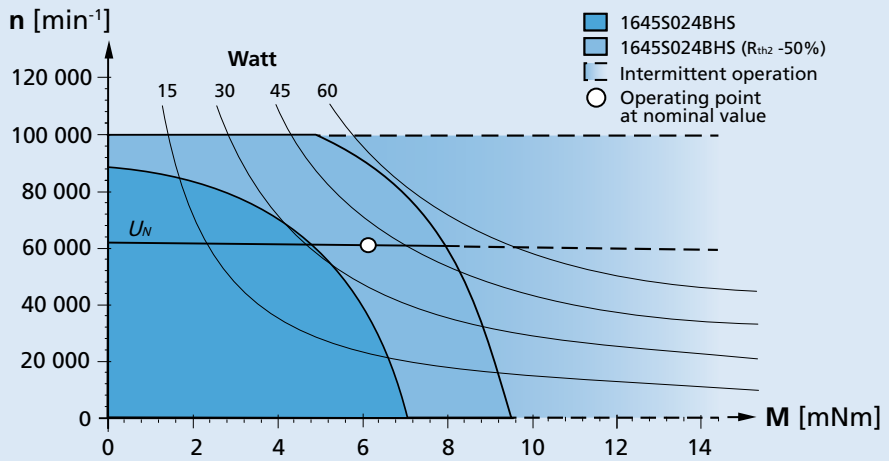

Recommended operation areas (example: nominal voltage 24V)

For notes on technical data and lifetime performance refer to "Technical Information".

Backwards

© DR. FRITZ FAULHABER GMBH & CO. KG
Specifications subject to change without notice.

Dimensional drawing

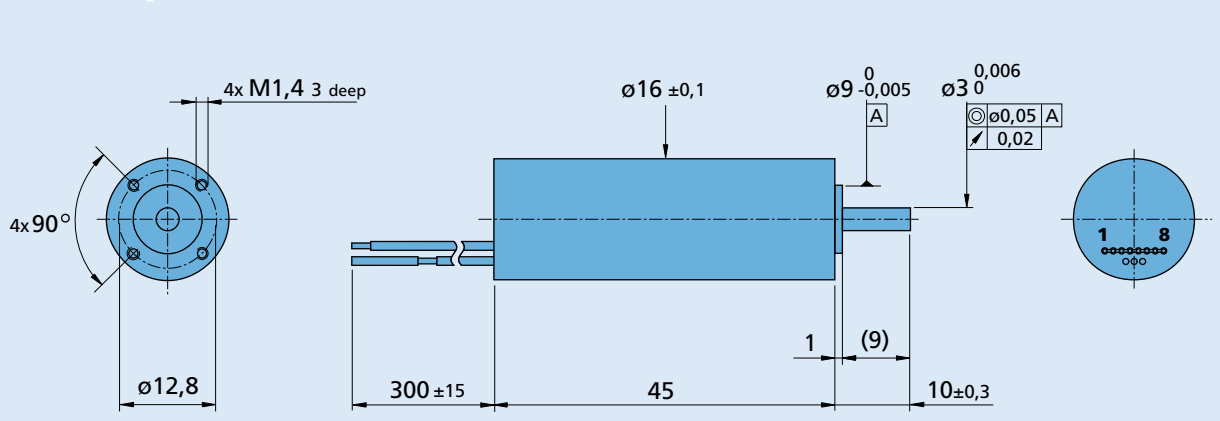

1645 S ... BHS

Option, cable and connection information

Example product designation: **1645S024BHS**

Option	Type	Description

Connection

No.	Function	Colour
–	Phase C	yellow
–	Phase B	orange
–	Phase A	brown
1	GND	red
2	U_{DD} (4,5 ... 5,5V)	grey
3	Hall sensor C	grey
4	Hall sensor B	grey
5	Hall sensor A	grey
6	Reserved	grey
7	Reserved	grey
8	Reserved	grey

Standard cable

Single wires, material PTFE
AWG24, Phase A/B/C
Flat cable, material PVC
AWG28, Pitch 1,27 mm
Hall A,B,C, U_{DD}, GND

Product combination

Precision Gearheads / Lead Screws	Encoders	Drive Electronics	Cables / Accessories
15/10 17/1 20/1R	IEM3-1024	SC 5004 P SC 5008 S MC 3603 S MC 5004 P MC 5005 S	To view our large range of accessory parts, please refer to the "Accessories" chapter.

© DR. FRITZ FAULHABER GMBH & CO. KG
Specifications subject to change without notice.

Brushless DC-Servomotors 15,9 mNm

2 Pole Technology 96 W

Series 1660 ... BHS

Values at 22°C and nominal voltage		1660 S		024 BHS	036 BHS	048 BHS	
1	Nominal voltage	U_N		24	36	48	V
2	Terminal resistance, phase-phase	R		0,29	0,51	1,12	Ω
3	Efficiency, max.	$\eta_{max.}$		92	92	92	%
4	No-load speed	n_0		52 400	60 100	53 600	min^{-1}
5	No-load current, typ. (with shaft ø 3 mm)	I_0		0,147	0,123	0,076	A
6	Stall torque	M_H		385	442	394	mNm
7	Friction torque, static	C_0		0,16	0,16	0,16	mNm
8	Friction torque, dynamic	C_V		$9{,}43 \cdot 10^{-6}$	$9{,}43 \cdot 10^{-6}$	$9{,}43 \cdot 10^{-6}$	mNm/min^{-1}
9	Speed constant	k_n		2 038	1 527	1 037	min^{-1}/V
10	Back-EMF constant	k_E		0,491	0,655	0,964	mV/min^{-1}
11	Torque constant	k_M		4,69	6,26	9,21	mNm/A
12	Current constant	k_I		0,21	0,16	0,11	A/mNm
13	Slope of n-M curve	$\Delta n/\Delta M$		127	124	127	min^{-1}/mNm
14	Terminal inductance, phase-phase	L		29	52	112	µH
15	Mechanical time constant	τ_m		1,2	1,2	1,2	ms
16	Rotor inertia	J		0,9	0,9	0,9	gcm^2
17	Angular acceleration	$\alpha_{max.}$		4 278	4 914	4 372	$\cdot 10^3 rad/s^2$
18	Thermal resistance	R_{th1} / R_{th2}	2,1 / 18,2				K/W
19	Thermal time constant	τ_{w1} / τ_{w2}	6,3 / 638				s
20	Operating temperature range:						
	– motor		-30 ... +125				°C
	– winding, max. permissible		+125				°C
21	Shaft bearings		ball bearings, preloaded				
22	Shaft load max.:						
	– with shaft diameter		3				mm
	– radial at 40 000 min^{-1} (5 mm from mounting flange)		19				N
	– axial at 40 000 min^{-1} (push only)		9				N
	– axial at standstill (push only)		44				N
23	Shaft play:						
	– radial	≤	0,01				mm
	– axial	=	0				mm
24	Housing material		stainless steel				
25	Mass		78				g
26	Direction of rotation		electronically reversible				
27	Speed up to	$n_{max.}$	97 000				min^{-1}
28	Number of pole pairs		1				
29	Hall sensors		digital				
30	Magnet material		NdFeB				

Rated values for continuous operation							
31	Rated torque	M_N		11,6	10,3	11,4	mNm
32	Rated current (thermal limit)	I_N		2,94	1,98	1,48	A
33	Rated speed	n_N		52 370	59 530	53 400	min^{-1}

Note: Rated values are calculated with nominal voltage and at a 22°C ambient temperature. The R_{th2} value has been reduced by 25%.

Note:

The diagram indicates the recommended speed in relation to the available torque at the output shaft for a given ambient temperature of 22°C.

The diagram shows the motor in a completely insulated as well as thermally coupled condition (R_{th2} 50% reduced).

The nominal voltage (U_N) curve shows the operating point at nominal voltage in the insulated and thermally coupled condition. Any points of operation above the curve at nominal voltage will require a higher operating voltage. Any points below the nominal voltage curve will require less voltage.

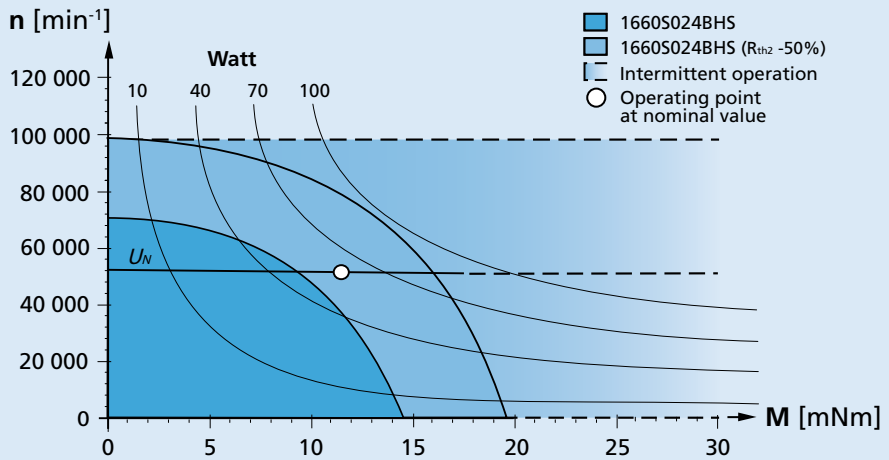

Recommended operation areas (example: nominal voltage 24V)

© DR. FRITZ FAULHABER GMBH & CO. KG
Specifications subject to change without notice.

Dimensional drawing

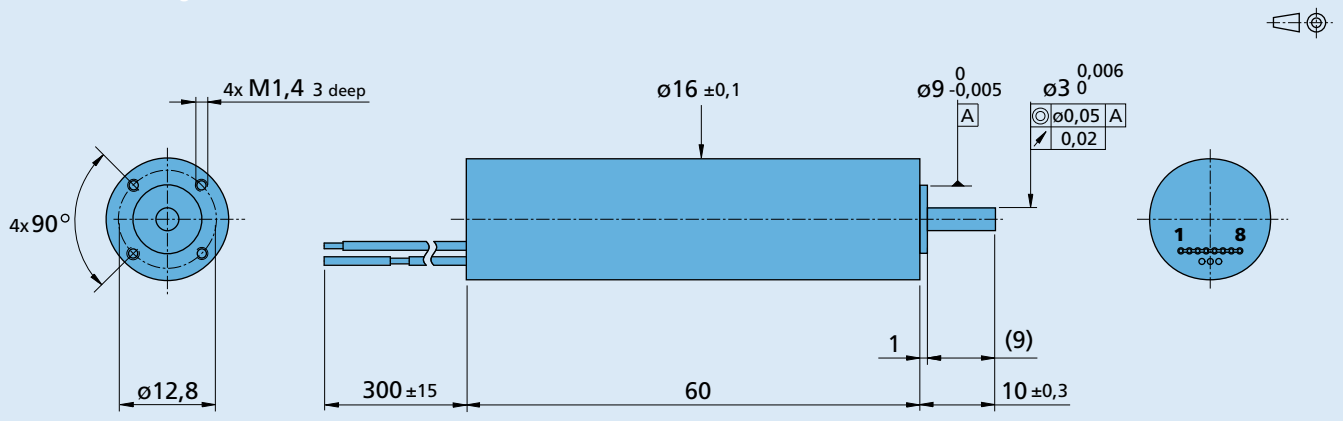

1660 S ... BHS

Option, cable and connection information

Example product designation: **1660S024BHS**

Option	Type	Description

Connection

No.	Function	Colour
–	Phase C	yellow
–	Phase B	orange
–	Phase A	brown
1	GND	red
2	U_{DD} (4,5 ... 5,5V)	grey
3	Hall sensor C	grey
4	Hall sensor B	grey
5	Hall sensor A	grey
6	Reserved	grey
7	Reserved	grey
8	Reserved	grey

Standard cable

Single wires, material PTFE
AWG24, Phase A/B/C
Flat cable, material PVC
AWG28, Pitch 1,27 mm
Hall A,B,C, U_{DD}, GND

Product combination

Precision Gearheads / Lead Screws	Encoders	Drive Electronics	Cables / Accessories
15/10 17/1 20/1R	IEM3-1024	SC 5004 P SC 5008 S MC 3603 S	To view our large range of accessory parts, please refer to the "Accessories" chapter.

© DR. FRITZ FAULHABER GMBH & CO. KG
Specifications subject to change without notice.

Brushless DC-Servomotors 18,7 mNm

2 Pole Technology 81 W

Series 1660 ... BHT

Values at 22°C and nominal voltage		1660 S		024 BHT	036 BHT	048 BHT	
1	Nominal voltage	U_N		24	36	48	V
2	Terminal resistance, phase-phase	R		0,49	1,1	1,93	Ω
3	Efficiency, max.	$\eta_{max.}$		90	90	90	%
4	No-load speed	n_0		34 900	35 200	35 500	min^{-1}
5	No-load current, typ. (with shaft ø 3 mm)	I_0		0,133	0,09	0,069	A
6	Stall torque	M_H		344	341	343	mNm
7	Friction torque, static	C_0		0,43	0,43	0,43	mNm
8	Friction torque, dynamic	C_V		$1{,}28 \cdot 10^{-5}$	$1{,}28 \cdot 10^{-5}$	$1{,}28 \cdot 10^{-5}$	mNm/min^{-1}
9	Speed constant	k_n		1 368	918	694	min^{-1}/V
10	Back-EMF constant	k_E		0,731	1,09	1,441	mV/min^{-1}
11	Torque constant	k_M		6,98	10,4	13,7	mNm/A
12	Current constant	k_I		0,143	0,096	0,073	A/mNm
13	Slope of n-M curve	$\Delta n/\Delta M$		95	97	97	min^{-1}/mNm
14	Terminal inductance, phase-phase	L		52	114	203	µH
15	Mechanical time constant	τ_m		1,2	1,2	1,3	ms
16	Rotor inertia	J		1,2	1,2	1,2	gcm^2
17	Angular acceleration	$\alpha_{max.}$		2 796	2 772	2 787	$\cdot 10^3 rad/s^2$
18	Thermal resistance	R_{th1} / R_{th2}	2,1 / 18,2				K/W
19	Thermal time constant	τ_{w1} / τ_{w2}	6,8 / 631				s
20	Operating temperature range:						
	– motor		-30 ... +125				°C
	– winding, max. permissible		+125				°C
21	Shaft bearings		ball bearings, preloaded				
22	Shaft load max.:						
	– with shaft diameter		3				mm
	– radial at 40 000 min^{-1} (5 mm from mounting flange)		19				N
	– axial at 40 000 min^{-1} (push only)		9				N
	– axial at standstill (push only)		44				N
23	Shaft play:						
	– radial	≤	0,01				mm
	– axial	=	0				mm
24	Housing material		stainless steel				
25	Mass		78				g
26	Direction of rotation		electronically reversible				
27	Speed up to	$n_{max.}$	76 000				min^{-1}
28	Number of pole pairs		1				
29	Hall sensors		digital				
30	Magnet material		NdFeB				

Rated values for continuous operation							
31	Rated torque	M_N		13,9	13,7	13,6	mNm
32	Rated current (thermal limit)	I_N		2,38	1,58	1,18	A
33	Rated speed	n_N		34 490	34 740	35 070	min^{-1}

Note: Rated values are calculated with nominal voltage and at a 22°C ambient temperature. The R_{th2} value has been reduced by 25%.

Note:

The diagram indicates the recommended speed in relation to the available torque at the output shaft for a given ambient temperature of 22°C.

The diagram shows the motor in a completely insulated as well as thermally coupled condition (R_{th2} 50% reduced).

The nominal voltage (U_N) curve shows the operating point at nominal voltage in the insulated and thermally coupled condition. Any points of operation above the curve at nominal voltage will require a higher operating voltage. Any points below the nominal voltage curve will require less voltage.

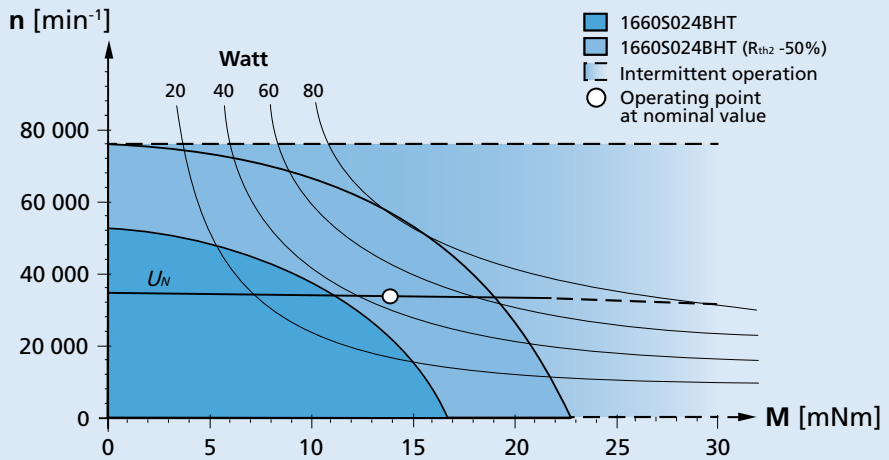

Recommended operation areas (example: nominal voltage 24V)

© DR. FRITZ FAULHABER GMBH & CO. KG
Specifications subject to change without notice.

Dimensional drawing

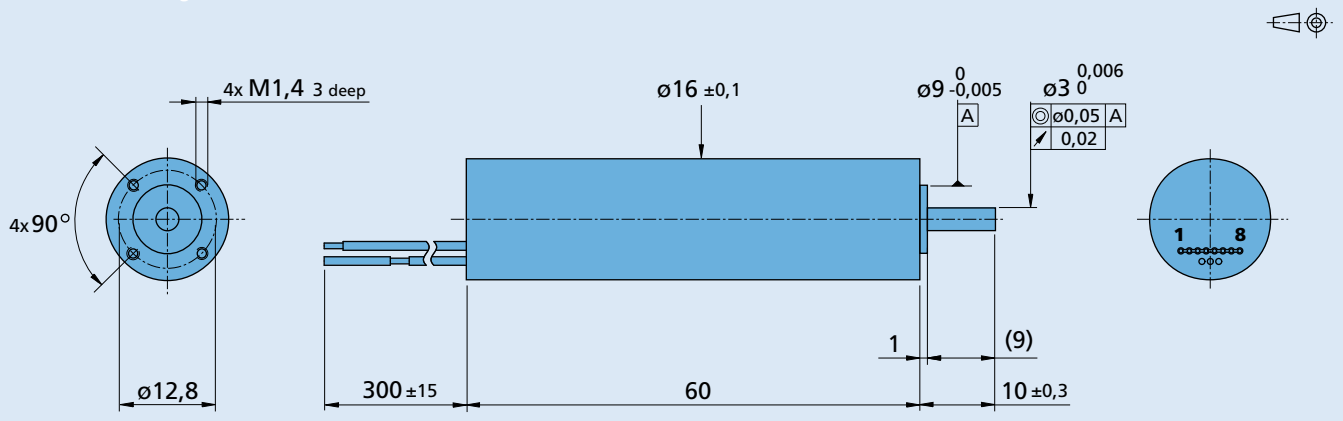

1660 S ... BHT

Option, cable and connection information

Example product designation: **1660S024BHT**

Option	Type	Description

Connection

No.	Function	Colour
–	Phase C	yellow
–	Phase B	orange
–	Phase A	brown
1	GND	red
2	U_{DD} (4,5 ... 5,5V)	grey
3	Hall sensor C	grey
4	Hall sensor B	grey
5	Hall sensor A	grey
6	Reserved	grey
7	Reserved	grey
8	Reserved	grey

Standard cable

Single wires, material PTFE
AWG24, Phase A/B/C
Flat cable, material PVC
AWG28, Pitch 1,27 mm
Hall A,B,C, U_{DD}, GND

Product combination

Precision Gearheads / Lead Screws	Encoders	Drive Electronics	Cables / Accessories
15/10 17/1 20/1R	IEM3-1024	SC 5004 P SC 5008 S MC 3603 S MC 5004 P MC 5005 S	To view our large range of accessory parts, please refer to the "Accessories" chapter.

© DR. FRITZ FAULHABER GMBH & CO. KG
Specifications subject to change without notice.

FAULHABER BX4

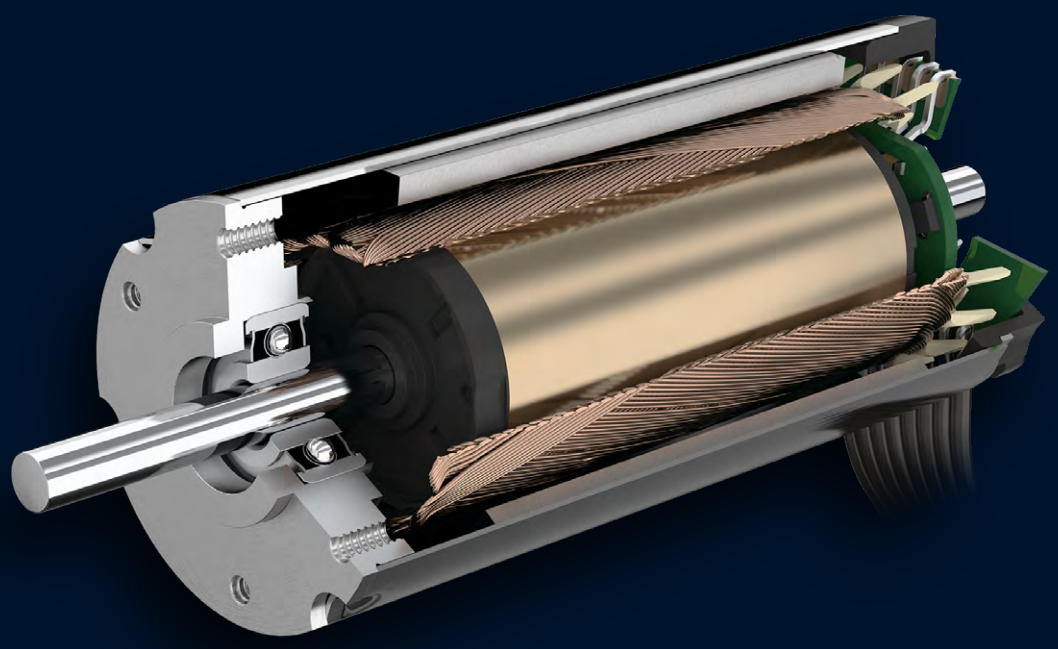

FAULHABER BX4

2232...BX4	with integrated Hall Sensors	18 mNm
2250...BX4	with integrated Hall Sensors	32 mNm
3242...BX4	with integrated Hall Sensors	53 mNm
3268...BX4	with integrated Hall Sensors	96 mNm

Backwards

Brushless DC-Servomotors 18 mNm

4 Pole Technology 23 W

Series 2232 ... BX4

Values at 22°C and nominal voltage		2232 S		006 BX4	012 BX4	015 BX4	018 BX4	024 BX4	
1	Nominal voltage	U_N		6	12	15	18	24	V
2	Terminal resistance, phase-phase	R		0,73	3,5	4,58	7,04	12,5	Ω
3	Efficiency, max.	$\eta_{max.}$		74	74	74	73	74	%
4	No-load speed	n_0		7 100	6 700	7 100	7 100	7 100	min^{-1}
5	No-load current, typ. (with shaft ø 3 mm)	I_0		0,16	0,072	0,06	0,053	0,039	A
6	Stall torque	M_H		64,7	58,7	64	60,7	61,7	mNm
7	Friction torque, static	C_0		0,46	0,46	0,46	0,46	0,46	mNm
8	Friction torque, dynamic	C_V		$1{,}1 \cdot 10^{-4}$	$1{,}1 \cdot 10^{-4}$	$1{,}1 \cdot 10^{-4}$	$1{,}1 \cdot 10^{-4}$	$1{,}1 \cdot 10^{-4}$	mNm/min^{-1}
9	Speed constant	k_n		1 198	562	480	399	295	min^{-1}/V
10	Back-EMF constant	k_E		0,835	1,78	2,08	2,504	3,393	mV/min^{-1}
11	Torque constant	k_M		7,97	17	19,9	23,9	32,4	mNm/A
12	Current constant	k_I		0,125	0,059	0,05	0,042	0,031	A/mNm
13	Slope of n-M curve	$\Delta n/\Delta M$		110	114	110	118	114	min^{-1}/mNm
14	Terminal inductance, phase-phase	L		25	115	156	225	410	µH
15	Mechanical time constant	τ_m		5,9	6,1	5,9	6,3	6,1	ms
16	Rotor inertia	J		5,1	5,1	5,1	5,1	5,1	gcm^2
17	Angular acceleration	$\alpha_{max.}$		127	115	125	119	121	$\cdot 10^3 rad/s^2$
18	Thermal resistance	R_{th1} / R_{th2}	3,9 / 18,8						K/W
19	Thermal time constant	τ_{w1} / τ_{w2}	7,9 / 520						s
20	Operating temperature range:								
	– motor		-40 ... +100						°C
	– winding, max. permissible		+125						°C
21	Shaft bearings		ball bearings, preloaded						
22	Shaft load max.:								
	– with shaft diameter		3						mm
	– radial at 3 000 min^{-1} (5 mm from mounting flange)		20						N
	– axial at 3 000 min^{-1} (push / pull)		2						N
	– axial at standstill (push / pull)		20						N
23	Shaft play:								
	– radial	≤	0,015						mm
	– axial	=	0						mm
24	Housing material		stainless steel						
25	Mass		65						g
26	Direction of rotation		electronically reversible						
27	Speed up to	$n_{max.}$	29 000						min^{-1}
28	Number of pole pairs		2						
29	Hall sensors		digital						
30	Magnet material		NdFeB						

Rated values for continuous operation									
31	Rated torque	M_N		14,8	14,7	14,8	14,3	14,6	mNm
32	Rated current (thermal limit)	I_N		2,22	1	0,89	0,72	0,54	A
33	Rated speed	n_N		5 030	4 450	5 040	4 930	4 840	min^{-1}

Note: Rated values are calculated with nominal voltage and at a 22°C ambient temperature. The R_{th2} value has been reduced by 25%.

Note:

The diagram indicates the recommended speed in relation to the available torque at the output shaft for a given ambient temperature of 22°C.

The diagram shows the motor in a completely insulated as well as thermally coupled condition (R_{th2} 50% reduced).

The nominal voltage (U_N) curve shows the operating point at nominal voltage in the insulated and thermally coupled condition. Any points of operation above the curve at nominal voltage will require a higher operating voltage. Any points below the nominal voltage curve will require less voltage.

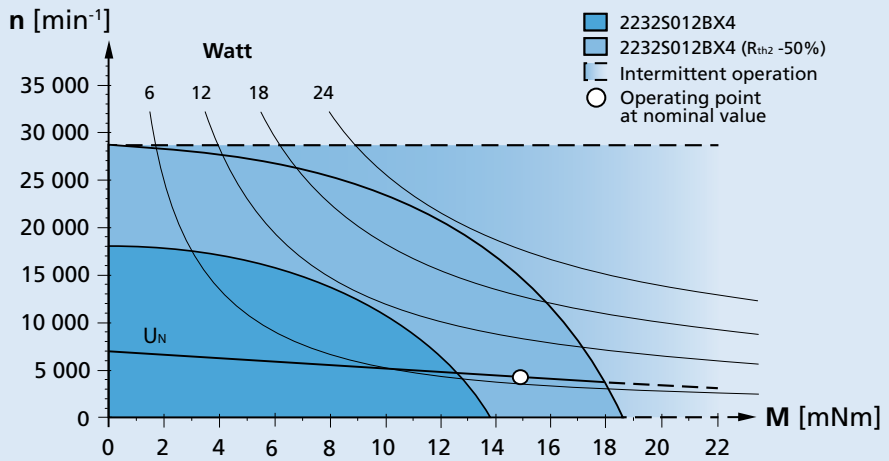

Recommended operation areas (example: nominal voltage 12V)

© DR. FRITZ FAULHABER GMBH & CO. KG
Specifications subject to change without notice.

Dimensional drawing

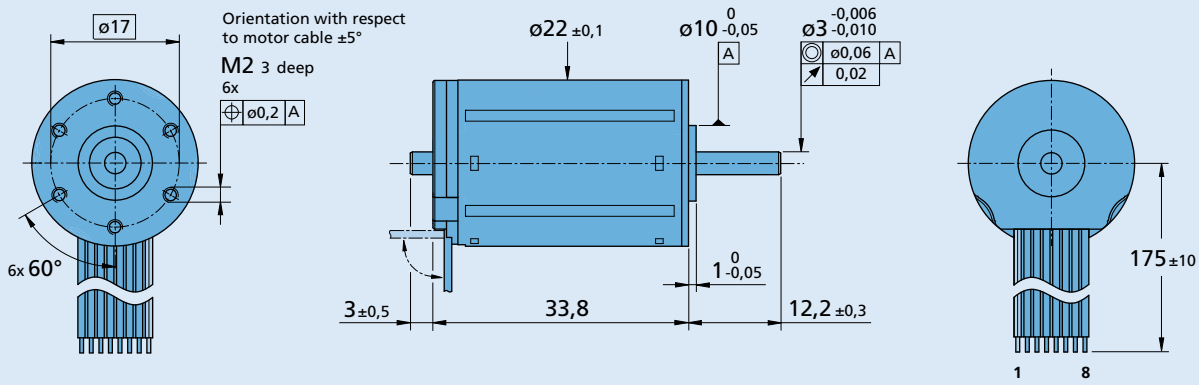

2232 S ... BX4

Option, cable and connection information

Example product designation: **2232S012BX4-3692**

Option	Type	Description
3830	Connector	AWG 26 / PVC ribbon cable with connector MOLEX Microfit 3.0, 43025-0800, recommended mating connector 43020-0800
4935	Single wires	Motor with single wires (PTFE), length 175 mm, AWG26
X4935	Single wires	Motor with single wires (PTFE), length 300 mm, AWG26
Y4935	Single wires	Motor with single wires (PTFE), length 600 mm, AWG26
4747	Temperature range	Up to 150°C, winding max. 150°C, with single wires (PTFE), length 175 mm, AWG26
X4747	Temperature range	Up to 150°C, winding max. 150°C, with single wires (PTFE), length 300 mm, AWG26
Y4747	Temperature range	Up to 150°C, winding max. 150°C, with single wires (PTFE), length 600 mm, AWG26
Y158	Shaft end	Motor without second shaft end
3692	Controller combination	Analog Hall sensors for combination with Speed Controller SC or Motion Controller MC
5327	Controller combination	For SIN-COS sensor model with integrated temperature sensor and combination with MC V3.0

Connection standard

No.	Function
1	Phase C
2	Phase B
3	Phase A
4	GND
5	U_{DD} (+5V)
6	Hall sensor C
7	Hall sensor B
8	Hall sensor A

Option: 4935/4747

Function	Colour
Phase C	yellow
Phase B	orange
Phase A	brown
GND	black
U_{DD} (+5V)	red
Hall sensor C	grey
Hall sensor B	blue
Hall sensor A	green

Standard cable

Insulation: PVC
8 conductors, AWG 26, pitch 1,27 mm , wires tinned.

Option: 5327

No.	Function
1	Phase C
2	Phase B
3	Phase A
4	GND
5	U_{DD} (+5V)
6	NTC
7	SIN
8	COS

Product combination

Precision Gearheads / Lead Screws	Encoders	Drive Electronics	Cables / Accessories
22GPT 22/7 26A 22L ... ML 22L ... SB 22L ... PB	IE3-1024 IE3-1024 L IER3-10000 IER3-10000 L AEMT-12/16 L AES-4096 L	SC 1801 P SC 1801 S SC 2402 P SC 2804 S SC 5004 P SC 5008 S MC 3001 B MC 3001 P MC 3603 S MC 5004 P MC 5005 S	To view our large range of accessory parts, please refer to the “Accessories” chapter.

© DR. FRITZ FAULHABER GMBH & CO. KG
Specifications subject to change without notice.

Brushless DC-Servomotors

32 mNm

4 Pole Technology

31 W

Series 2250 ... BX4

Values at 22°C and nominal voltage		2250 S	012 BX4	018 BX4	024 BX4	
1 Nominal voltage	U_N		12	18	24	V
2 Terminal resistance, phase-phase	R		1,55	3,17	5,9	Ω
3 Efficiency, max.	$\eta_{max.}$		76	76	77	%
4 No-load speed	n_0		6 000	6 400	6 200	min^{-1}
5 No-load current, typ. (with shaft ø 3 mm)	I_0		0,128	0,094	0,066	A
6 Stall torque	M_H		147	152	151	mNm
7 Friction torque, static	C_0		0,8	0,8	0,8	mNm
8 Friction torque, dynamic	C_V		$2{,}6 \cdot 10^{-4}$	$2{,}6 \cdot 10^{-4}$	$2{,}6 \cdot 10^{-4}$	mNm/min^{-1}
9 Speed constant	k_n		502	354	255	min^{-1}/V
10 Back-EMF constant	k_E		1,994	2,825	3,927	mV/min^{-1}
11 Torque constant	k_M		19	27	37,5	mNm/A
12 Current constant	k_I		0,053	0,037	0,027	A/mNm
13 Slope of n-M curve	$\Delta n/\Delta M$		40,8	41,6	40,3	min^{-1}/mNm
14 Terminal inductance, phase-phase	L		62,8	126	250	µH
15 Mechanical time constant	τ_m		4,3	4,3	4,2	ms
16 Rotor inertia	J		10	10	10	gcm^2
17 Angular acceleration	$\alpha_{max.}$		147	152	151	$\cdot 10^3 rad/s^2$
18 Thermal resistance	R_{th1} / R_{th2}	3,5 / 15				K/W
19 Thermal time constant	τ_{w1} / τ_{w2}	12 / 660				s
20 Operating temperature range:						
– motor		-40 ... +100				°C
– winding, max. permissible		+125				°C
21 Shaft bearings		ball bearings, preloaded				
22 Shaft load max.:						
– with shaft diameter		3				mm
– radial at 3 000 min^{-1} (5 mm from mounting flange)		20				N
– axial at 3 000 min^{-1} (push / pull)		2				N
– axial at standstill (push / pull)		20				N
23 Shaft play:						
– radial	≤	0,015				mm
– axial	=	0				mm
24 Housing material		stainless steel				
25 Mass		105				g
26 Direction of rotation		electronically reversible				
27 Speed up to	$n_{max.}$	20 000				min^{-1}
28 Number of pole pairs		2				
29 Hall sensors		digital				
30 Magnet material		NdFeB				
Rated values for continuous operation						
31 Rated torque	M_N		26,2	25,5	26,2	mNm
32 Rated current (thermal limit)	I_N		1,66	1,15	0,85	A
33 Rated speed	n_N		4 740	5 140	4 870	min^{-1}

Note: Rated values are calculated with nominal voltage and at a 22°C ambient temperature. The R_{th2} value has been reduced by 25%.

Note:

The diagram indicates the recommended speed in relation to the available torque at the output shaft for a given ambient temperature of 22°C.

The diagram shows the motor in a completely insulated as well as thermally coupled condition (R_{th2} 50% reduced).

The nominal voltage (U_N) curve shows the operating point at nominal voltage in the insulated and thermally coupled condition. Any points of operation above the curve at nominal voltage will require a higher operating voltage. Any points below the nominal voltage curve will require less voltage.

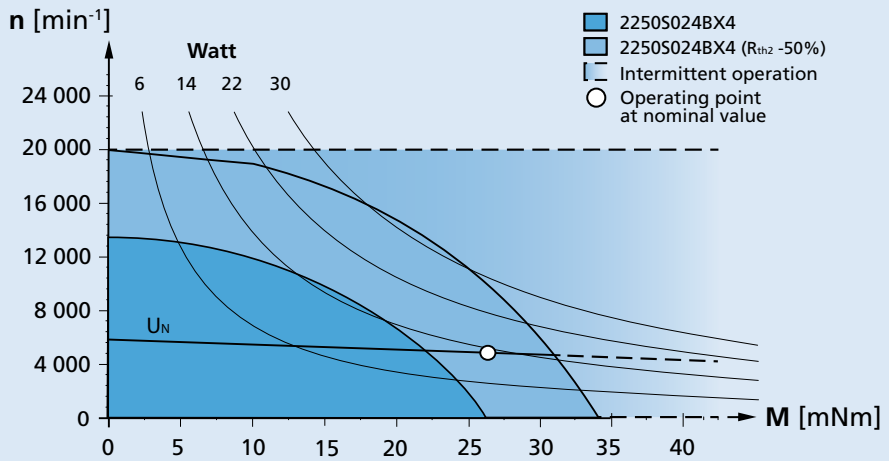

Recommended operation areas (example: nominal voltage 24V)

© DR. FRITZ FAULHABER GMBH & CO. KG
Specifications subject to change without notice.

Dimensional drawing

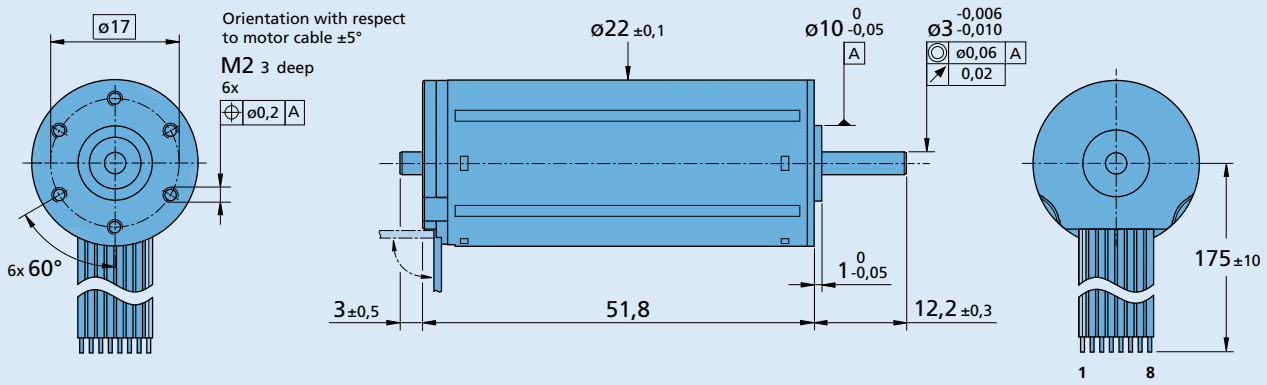

2250 S ... BX4

Option, cable and connection information

Example product designation: **2250S024BX4-3692**

Option	Type	Description
3830	Connector	AWG 26 / PVC ribbon cable with connector MOLEX Microfit 3.0, 43025-0800, recommended mating connector 43020-0800
4935	Single wires	Motor with single wires (PTFE), length 175 mm, AWG26
X4935	Single wires	Motor with single wires (PTFE), length 300 mm, AWG26
Y4935	Single wires	Motor with single wires (PTFE), length 600 mm, AWG26
4747	Temperature range	Up to 150°C, winding max. 150°C, with single wires (PTFE), length 175 mm, AWG26
X4747	Temperature range	Up to 150°C, winding max. 150°C, with single wires (PTFE), length 300 mm, AWG26
Y4747	Temperature range	Up to 150°C, winding max. 150°C, with single wires (PTFE), length 600 mm, AWG26
Y158	Shaft end	Motor without second shaft end
3692	Controller combination	Analog Hall sensors for combination with Speed Controller SC or Motion Controller MC
5327	Controller combination	For SIN-COS sensor model with integrated temperature sensor and combination with MC V3.0

Connection standard

No.	Function
1	Phase C
2	Phase B
3	Phase A
4	GND
5	U_{DD} (+5V)
6	Hall sensor C
7	Hall sensor B
8	Hall sensor A

Option: 4935/4747

Function	Colour
Phase C	yellow
Phase B	orange
Phase A	brown
GND	black
U_{DD} (+5V)	red
Hall sensor C	grey
Hall sensor B	blue
Hall sensor A	green

Standard cable

Insulation: PVC
8 conductors, AWG 26, pitch 1,27 mm , wires tinned.

Option: 5327

No.	Function
1	Phase C
2	Phase B
3	Phase A
4	GND
5	U_{DD} (+5V)
6	NTC
7	SIN
8	COS

Product combination

Precision Gearheads / Lead Screws	Encoders	Drive Electronics	Cables / Accessories
22GPT 22/7 26A 32GPT 22L ... ML 22L ... SB 22L ... PB 32L ... TL 32L ... ML 32L ... SB 32L ... PB	IE3-1024 IE3-1024 L IER3-10000 IER3-10000 L AEMT-12/16 L AES-4096 L	SC 2402 P SC 2804 S SC 5004 P SC 5008 S MC 3001 B MC 3001 P MC 3603 S MC 5004 P MC 5005 S	To view our large range of accessory parts, please refer to the “Accessories” chapter.

© DR. FRITZ FAULHABER GMBH & CO. KG
Specifications subject to change without notice.

Brushless DC-Servomotors 53 mNm

4 Pole Technology 45 W

Series 3242 ... BX4

Values at 22°C and nominal voltage		3242 G	012 BX4	018 BX4	024 BX4	036 BX4	042 BX4	048 BX4	
1	Nominal voltage	U_N	12	18	24	36	42	48	V
2	Terminal resistance, phase-phase	R	0,92	2,01	3,67	8,96	11,7	15,1	Ω
3	Efficiency, max.	$\eta_{max.}$	78	78	78	77	78	78	%
4	No-load speed	n_0	5 600	5 500	5 600	5 500	5 500	5 500	min^{-1}
5	No-load current, typ. (with shaft ø 5 mm)	I_0	0,179	0,117	0,089	0,059	0,05	0,044	A
6	Stall torque	M_H	268,7	280	269,4	251	262	265	mNm
7	Friction torque, static	C_0	1,3	1,3	1,3	1,3	1,3	1,3	mNm
8	Friction torque, dynamic	C_V	$4{,}1 \cdot 10^{-4}$	$4{,}1 \cdot 10^{-4}$	$4{,}1 \cdot 10^{-4}$	$4{,}1 \cdot 10^{-4}$	$4{,}1 \cdot 10^{-4}$	$4{,}1 \cdot 10^{-4}$	mNm/min^{-1}
9	Speed constant	k_n	461	304	231	152	130	114	min^{-1}/V
10	Back-EMF constant	k_E	2,168	3,285	4,335	6,571	7,666	8,762	mV/min^{-1}
11	Torque constant	k_M	20,7	31,4	41,4	62,8	73,1	83,7	mNm/A
12	Current constant	k_I	0,048	0,032	0,024	0,016	0,014	0,012	A/mNm
13	Slope of n-M curve	$\Delta n/\Delta M$	20,5	19,5	20,4	21,7	20,8	20,6	min^{-1}/mNm
14	Terminal inductance, phase-phase	L	60	132	240	529	719	940	µH
15	Mechanical time constant	τ_m	6,4	6,1	6,4	6,8	6,5	6,5	ms
16	Rotor inertia	J	30	30	30	30	30	30	gcm^2
17	Angular acceleration	$\alpha_{max.}$	90	93,2	90	83,6	87,2	88,3	$\cdot 10^3 rad/s^2$
18	Thermal resistance	R_{th1} / R_{th2}	2,3 / 11,6						K/W
19	Thermal time constant	τ_{w1} / τ_{w2}	13 / 880						s
20	Operating temperature range:								
	– motor		-40 ... +100						°C
	– winding, max. permissible		+125						°C
21	Shaft bearings		ball bearings, preloaded						
22	Shaft load max.:								
	– with shaft diameter		5						mm
	– radial at 3 000 min^{-1} (5 mm from mounting flange)		50						N
	– axial at 3 000 min^{-1} (push / pull)		5						N
	– axial at standstill (push / pull)		50						N
23	Shaft play:								
	– radial	≤	0,015						mm
	– axial	=	0						mm
24	Housing material		stainless steel						
25	Mass		179						g
26	Direction of rotation		electronically reversible						
27	Speed up to	$n_{max.}$	17 000						min^{-1}
28	Number of pole pairs		2						
29	Hall sensors		digital						
30	Magnet material		NdFeB						

Rated values for continuous operation									
31	Rated torque	M_N	41,8	43	41,8	40,7	41,6	41,8	mNm
32	Rated current (thermal limit)	I_N	2,43	1,64	1,21	0,78	0,68	0,6	A
33	Rated speed	n_N	4 600	4 580	4 600	4 480	4 520	4 530	min^{-1}

Note: Rated values are calculated with nominal voltage and at a 22°C ambient temperature. The R_{th2} value has been reduced by 25%.

Note:

The diagram indicates the recommended speed in relation to the available torque at the output shaft for a given ambient temperature of 22°C.

The diagram shows the motor in a completely insulated as well as thermally coupled condition (R_{th2} 50% reduced).

The nominal voltage (U_N) curve shows the operating point at nominal voltage in the insulated and thermally coupled condition. Any points of operation above the curve at nominal voltage will require a higher operating voltage. Any points below the nominal voltage curve will require less voltage.

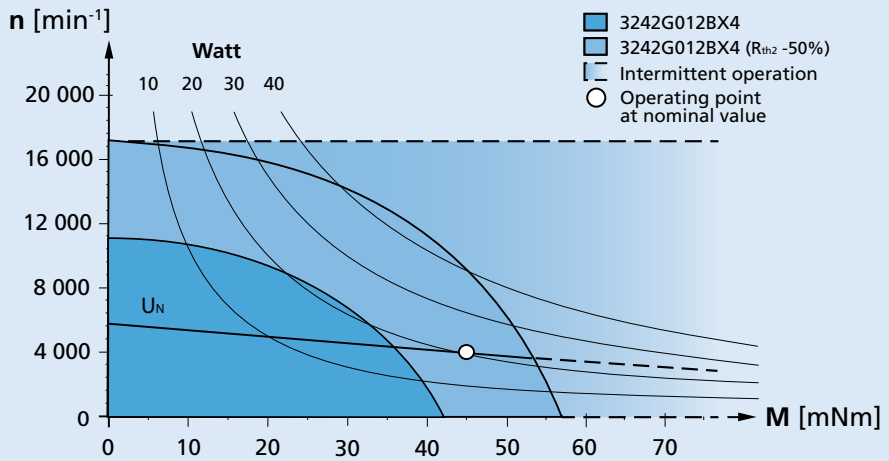

Recommended operation areas (example: nominal voltage 12V)

© DR. FRITZ FAULHABER GMBH & CO. KG
Specifications subject to change without notice.

Dimensional drawing

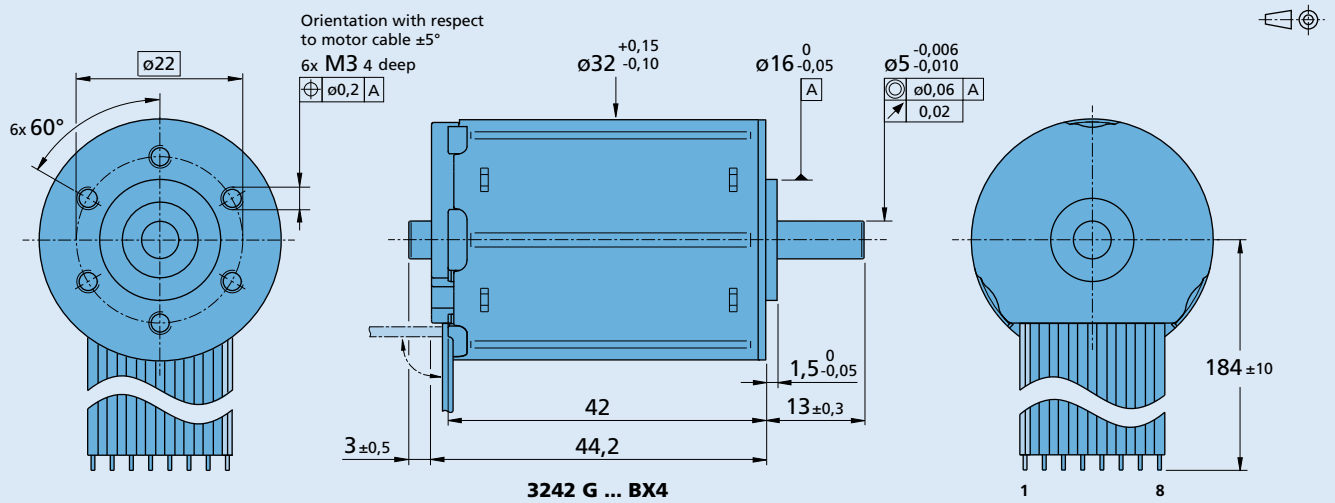

3242 G ... BX4

Option, cable and connection information

Example product designation: **3242G012BX4-3692**

Option	Type	Description
3830	Connector	AWG 26 / PVC ribbon cable with connector MOLEX Microfit 3.0, 43025-0800, recommended mating connector 43020-0800
4935	Single wires	Motor with single wires (PTFE), length 184 mm, AWG22
X4935	Single wires	Motor with single wires (PTFE), length 300 mm, AWG22
Y4935	Single wires	Motor with single wires (PTFE), length 600 mm, AWG22
4747	Temperature range	Up to 150°C, winding max. 150°C, with single wires (PTFE), length 184 mm, AWG22
X4747	Temperature range	Up to 150°C, winding max. 150°C, with single wires (PTFE), length 300 mm, AWG22
Y4747	Temperature range	Up to 150°C, winding max. 150°C, with single wires (PTFE), length 600 mm, AWG22
Y158	Shaft end	Motor without second shaft end
3692	Controller combination	Analog Hall sensors for combination with Speed Controller SC or Motion Controller MC

Connection standard / Option: 4935/4747

No.	Function	Function	Colour
1	Phase C	Phase C	yellow
2	Phase B	Phase B	orange
3	Phase A	Phase A	brown
4	GND	GND	black
5	U_{DD} (+5V)	U_{DD} (+5V)	red
6	Hall sensor C	Hall sensor C	grey
7	Hall sensor B	Hall sensor B	blue
8	Hall sensor A	Hall sensor A	green

Standard cable

Insulation: PVC
8 conductors, AWG 24
pitch 2,54 mm, wires tinned

Product combination

Precision Gearheads / Lead Screws	Encoders	Drive Electronics	Cables / Accessories
32GPT 32/3R 38/1 38/1 S 38/2 38/2 S 42GPT 32L ... TL 32L ... ML 32L ... SB 32L ... PB	IE3-1024 IE3-1024 L IER3-10000 IER3-10000 L AEMT-12/16 L AES-4096 L	SC 2402 P SC 2804 S SC 5004 P SC 5008 S MC 3603 S MC 5004 P MC 5005 S MC 5010 S	MBZ Brake MBZ is available in combination with analog Hall sensors only. To view our large range of accessory parts, please refer to the "Accessories" chapter.

© DR. FRITZ FAULHABER GMBH & CO. KG
Specifications subject to change without notice.

Brushless DC-Servomotors

96 mNm

4 Pole Technology

62 W

Series 3268 ... BX4

Values at 22°C and nominal voltage		3268 G	018 BX4	024 BX4	030 BX4	036 BX4	042 BX4	048 BX4	
1	Nominal voltage	U_N	18	24	30	36	42	48	V
2	Terminal resistance, phase-phase	R	0,92	1,47	2,08	3,23	4,83	6,06	Ω
3	Efficiency, max.	$\eta_{max.}$	80	81	80	80	80	79	%
4	No-load speed	n_0	5 100	5 500	5 700	5 500	5 300	5 500	min^{-1}
5	No-load current, typ. (with shaft ø 5 mm)	I_0	0,22	0,183	0,162	0,124	0,101	0,093	A
6	Stall torque	M_H	670	705	742	716	670	678	mNm
7	Friction torque, static	C_0	1,6	1,6	1,6	1,6	1,6	1,6	mNm
8	Friction torque, dynamic	C_V	$1{,}1 \cdot 10^{-3}$	$1{,}1 \cdot 10^{-3}$	$1{,}1 \cdot 10^{-3}$	$1{,}1 \cdot 10^{-3}$	$1{,}1 \cdot 10^{-3}$	$1{,}1 \cdot 10^{-3}$	mNm/min^{-1}
9	Speed constant	k_n	278	220	185	148	124	111	min^{-1}/V
10	Back-EMF constant	k_E	3,595	4,534	5,392	6,741	8,088	8,987	mV/min^{-1}
11	Torque constant	k_M	34,3	43,5	51,5	64,4	77,2	85,8	mNm/A
12	Current constant	k_I	0,029	0,023	0,019	0,015	0,013	0,012	A/mNm
13	Slope of n-M curve	$\Delta n/\Delta M$	7,45	7,5	7,48	7,44	7,73	7,85	min^{-1}/mNm
14	Terminal inductance, phase-phase	L	67,6	110	152	238	342	423	µH
15	Mechanical time constant	τ_m	4,9	4,9	4,9	4,9	5,1	5,2	ms
16	Rotor inertia	J	63	63	63	63	63	63	gcm^2
17	Angular acceleration	$\alpha_{max.}$	106	112	118	114	106	108	$\cdot 10^3 rad/s^2$
18	Thermal resistance	R_{th1} / R_{th2}	1,7 / 8,8						K/W
19	Thermal time constant	τ_{w1} / τ_{w2}	16 / 1 080						s
20	Operating temperature range:								
	– motor		-40 ... +100						°C
	– winding, max. permissible		+125						°C
21	Shaft bearings		ball bearings, preloaded						
22	Shaft load max.:								
	– with shaft diameter		5						mm
	– radial at 3 000 min^{-1} (5 mm from mounting flange)		50						N
	– axial at 3 000 min^{-1} (push / pull)		5						N
	– axial at standstill (push / pull)		50						N
23	Shaft play:								
	– radial	≤	0,015						mm
	– axial	=	0						mm
24	Housing material		stainless steel						
25	Mass		290						g
26	Direction of rotation		electronically reversible						
27	Speed up to	$n_{max.}$	12 000						min^{-1}
28	Number of pole pairs		2						
29	Hall sensors		digital						
30	Magnet material		NdFeB						

Rated values for continuous operation									
31	Rated torque	M_N	74,5	72	69,8	71,9	71,7	70	mNm
32	Rated current (thermal limit)	I_N	2,63	2	1,66	1,36	1,13	1	A
33	Rated speed	n_N	4 550	4 890	5 210	4 950	4 750	4 920	min^{-1}

Note: Rated values are calculated with nominal voltage and at a 22°C ambient temperature. The R_{th2} value has been reduced by 25%.

Note:

The diagram indicates the recommended speed in relation to the available torque at the output shaft for a given ambient temperature of 22°C.

The diagram shows the motor in a completely insulated as well as thermally coupled condition (R_{th2} 50% reduced).

The nominal voltage (U_N) curve shows the operating point at nominal voltage in the insulated and thermally coupled condition. Any points of operation above the curve at nominal voltage will require a higher operating voltage. Any points below the nominal voltage curve will require less voltage.

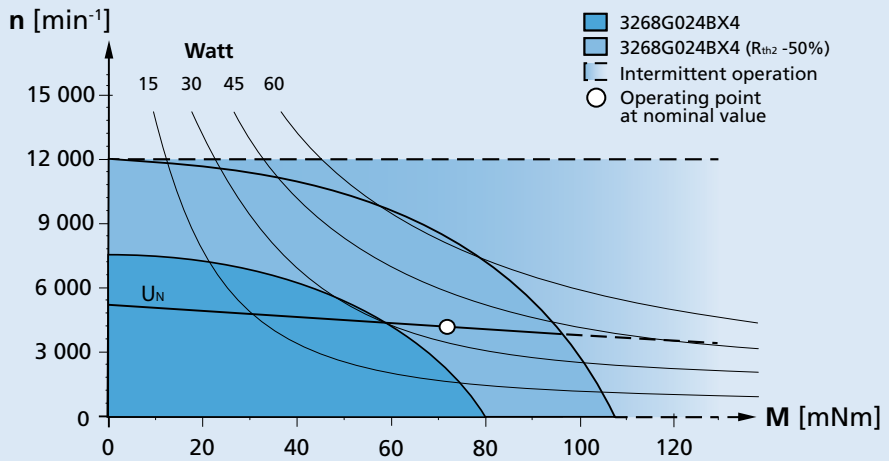

Recommended operation areas (example: nominal voltage 24V)

© DR. FRITZ FAULHABER GMBH & CO. KG
Specifications subject to change without notice.

Dimensional drawing

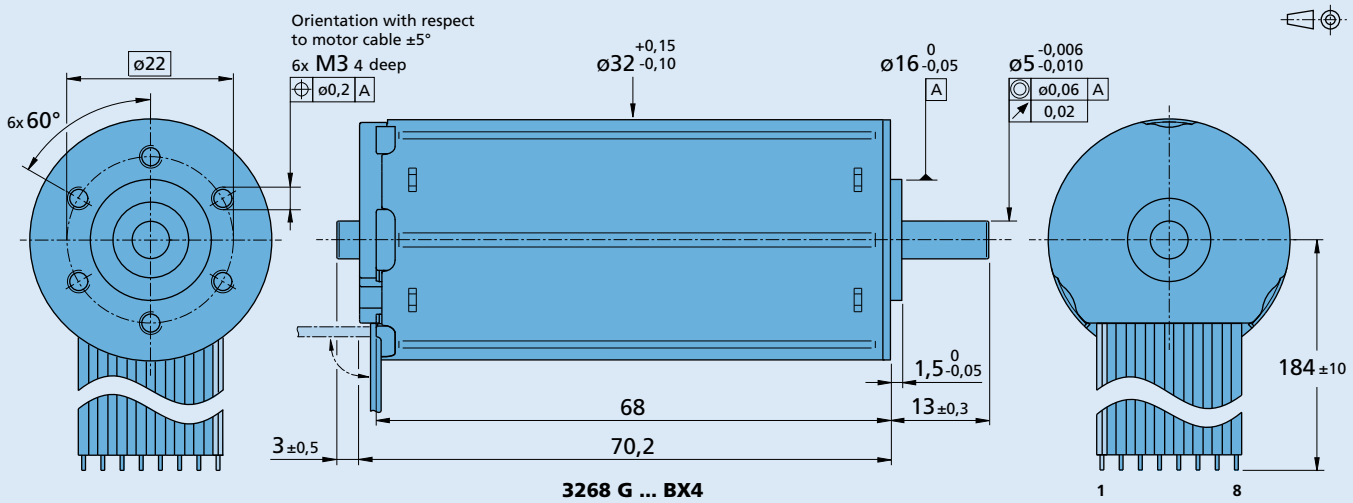

3268 G ... BX4

Option, cable and connection information

Example product designation: **3268G024BX4-3692**

Option	Type	Description
3830	Connector	AWG 26 / PVC ribbon cable with connector MOLEX Microfit 3.0, 43025-0800, recommended mating connector 43020-0800
4935	Single wires	Motor with single wires (PTFE), length 184 mm, AWG22
X4935	Single wires	Motor with single wires (PTFE), length 300 mm, AWG22
Y4935	Single wires	Motor with single wires (PTFE), length 600 mm, AWG22
4747	Temperature range	Up to 150°C, winding max. 150°C, with single wires (PTFE), length 184 mm, AWG22
X4747	Temperature range	Up to 150°C, winding max. 150°C, with single wires (PTFE), length 300 mm, AWG22
Y4747	Temperature range	Up to 150°C, winding max. 150°C, with single wires (PTFE), length 600 mm, AWG22
Y158	Shaft end	Motor without second shaft end
3692	Controller combination	Analog Hall sensors for combination with Speed Controller SC or Motion Controller MC

Connection standard / Option: 4935/4747

No.	Function	Function	Colour
1	Phase C	Phase C	yellow
2	Phase B	Phase B	orange
3	Phase A	Phase A	brown
4	GND	GND	black
5	U_{DD} (+5V)	U_{DD} (+5V)	red
6	Hall sensor C	Hall sensor C	grey
7	Hall sensor B	Hall sensor B	blue
8	Hall sensor A	Hall sensor A	green

Standard cable

Insulation: PVC
8 conductors, AWG 24
pitch 2,54 mm, wires tinned

Product combination

Precision Gearheads / Lead Screws	Encoders	Drive Electronics	Cables / Accessories
32GPT 32/3R 38/1 38/1 S 38/2 38/2 S 42GPT 32L ... TL 32L ... ML 32L ... SB 32L ... PB	IE3-1024 IE3-1024 L IER3-10000 IER3-10000 L AEMT-12/16 L AES-4096 L	SC 2804 S SC 5004 P SC 5008 S MC 3603 S MC 5004 P MC 5005 S MC 5010 S	MBZ Brake MBZ is available in combination with analog Hall sensors only. To view our large range of accessory parts, please refer to the "Accessories" chapter.

© DR. FRITZ FAULHABER GMBH & CO. KG
Specifications subject to change without notice.

FAULHABER BP4

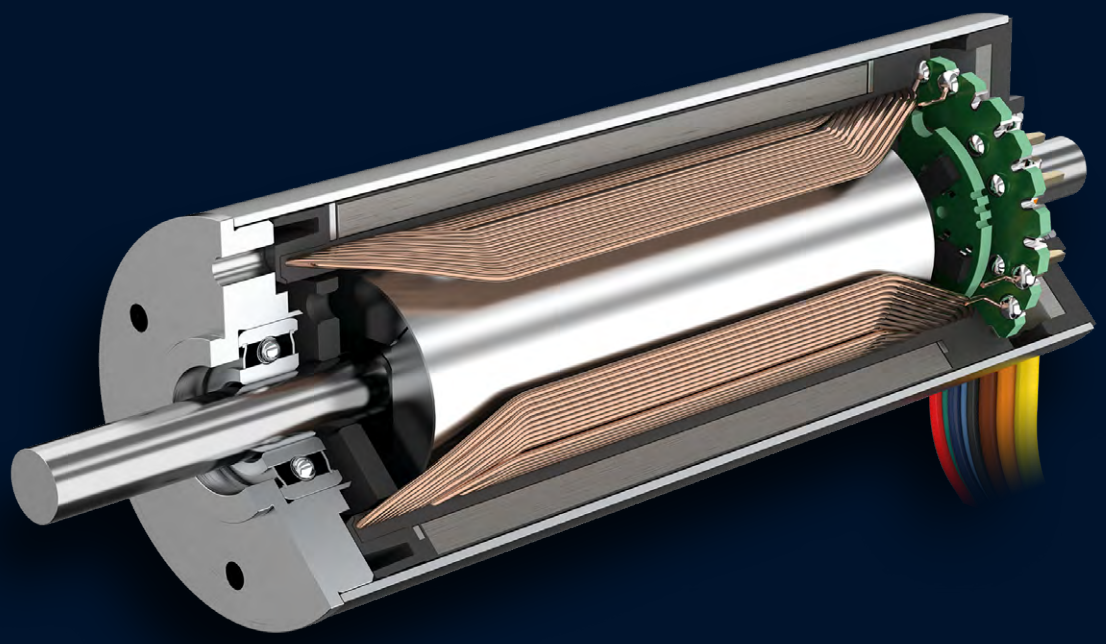

FAULHABER BP4

2264...BP4	with integrated Hall Sensors	59 mNm
3274...BP4	with integrated Hall Sensors	158 mNm

Backwards

Brushless DC-Servomotors 59 mNm

4 Pole Technology 133 W

Series 2264 ... BP4

Values at 22°C and nominal voltage		2264 W	012 BP4	024 BP4	048 BP4	
1 Nominal voltage	U_N		12	24	48	V
2 Terminal resistance, phase-phase	R		0,05	0,22	0,881	Ω
3 Efficiency, max.	$\eta_{max.}$		91	91	90	%
4 No-load speed	n_0		21 000	21 100	21 100	min^{-1}
5 No-load current, typ. (with shaft ø 4 mm)	I_0		0,521	0,261	0,13	A
6 Stall torque	M_H		1 311	1 311	1 280	mNm
7 Friction torque, static	C_0		0,41	0,41	0,407	mNm
8 Friction torque, dynamic	C_V		$1{,}15 \cdot 10^{-4}$	$1{,}15 \cdot 10^{-4}$	$1{,}15 \cdot 10^{-4}$	mNm/min^{-1}
9 Speed constant	k_n		1 618	809	404	min^{-1}/V
10 Back-EMF constant	k_E		0,618	1,236	2,48	mV/min^{-1}
11 Torque constant	k_M		5,9	11,8	23,6	mNm/A
12 Current constant	k_I		0,169	0,085	0,0423	A/mNm
13 Slope of n-M curve	$\Delta n/\Delta M$		14,8	14,8	15,1	min^{-1}/mNm
14 Terminal inductance, phase-phase	L		6	24	91,3	µH
15 Mechanical time constant	τ_m		1,4	1,4	1,45	ms
16 Rotor inertia	J		9,2	9,2	9,21	gcm^2
17 Angular acceleration	$\alpha_{max.}$		1 424	1 424	1 400	$\cdot 10^3 rad/s^2$
18 Thermal resistance	R_{th1} / R_{th2}	1,2 / 12				K/W
19 Thermal time constant	τ_{w1} / τ_{w2}	7 / 693				s
20 Operating temperature range:						
– motor		-40 ... +125				°C
– winding, max. permissible		+150				°C
21 Shaft bearings		ball bearings, preloaded				
22 Shaft load max.:						
– with shaft diameter		4				mm
– radial at 3 000 min^{-1} (3 mm from mounting flange)		20				N
– axial at 3 000 min^{-1} (push / pull)		2				N
– axial at standstill (push / pull)		20				N
23 Shaft play:						
– radial	≤	0,015				mm
– axial	=	0				mm
24 Housing material		stainless steel				
25 Mass		140				g
26 Direction of rotation		electronically reversible				
27 Speed up to	$n_{max.}$	34 500				min^{-1}
28 Number of pole pairs		2				
29 Hall sensors		digital				
30 Magnet material		NdFeB				
Rated values for continuous operation						
31 Rated torque	M_N		59	59	57,9	mNm
32 Rated current (thermal limit)	I_N		11,9	6	2,94	A
33 Rated speed	n_N		20 460	20 490	20 500	min^{-1}

Note: Rated values are calculated with nominal voltage and at a 22°C ambient temperature. The R_{th2} value has been reduced by 50%.

Note:

The diagram indicates the recommended speed in relation to the available torque at the output shaft for a given ambient temperature of 22°C.

The diagram shows the motor in a completely insulated as well as thermally coupled condition (R_{th2} 50% reduced).

The nominal voltage (U_N) curve shows the operating point at nominal voltage in the insulated and thermally coupled condition. Any points of operation above the curve at nominal voltage will require a higher operating voltage. Any points below the nominal voltage curve will require less voltage.

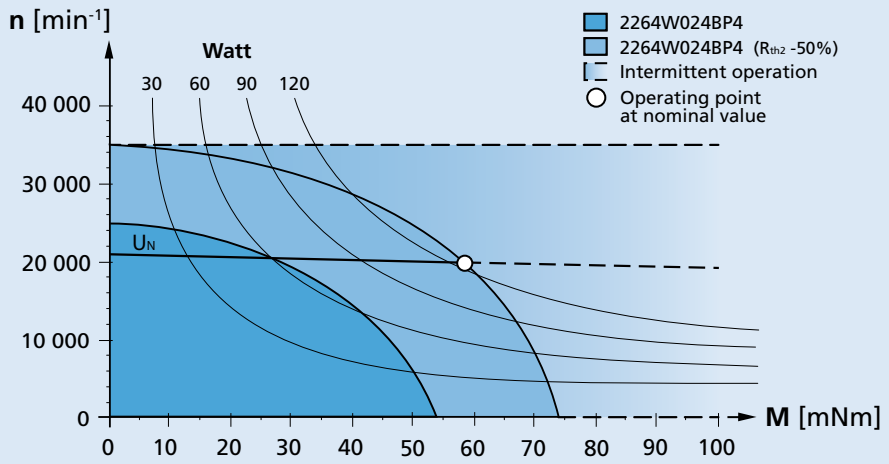

Recommended operation areas (example: nominal voltage 24 V)

© DR. FRITZ FAULHABER GMBH & CO. KG
Specifications subject to change without notice.

Dimensional drawing

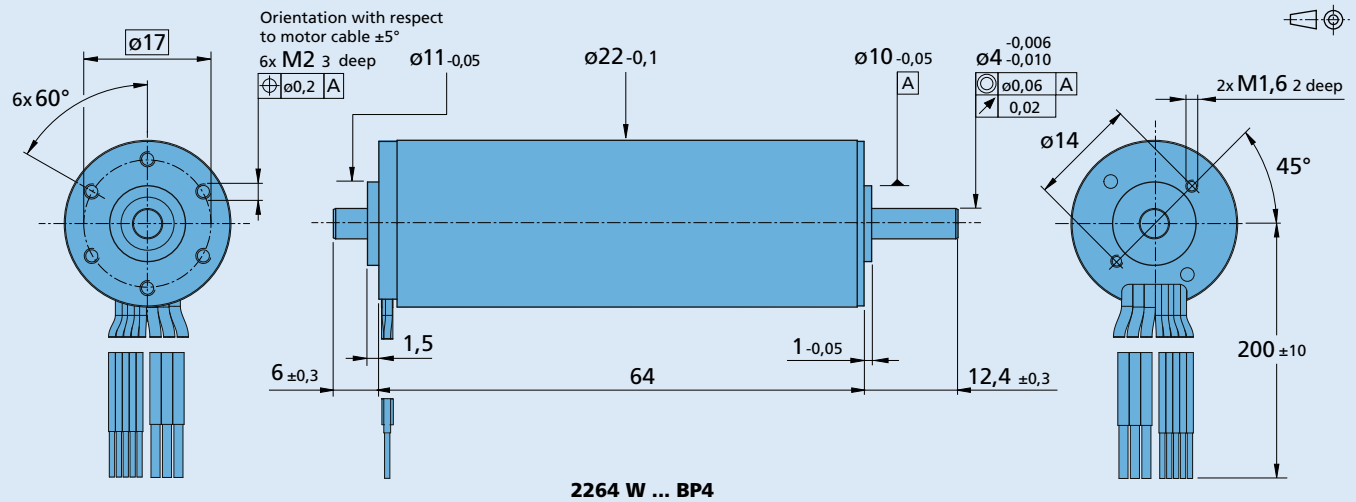

2264 W ... BP4

Option, cable and connection information

Example product designation: **2264W024BP4-3692**

Option	Type	Description
Y158	Shaft end	Motor without second shaft end
3692	Controller combination	Analog Hall sensors for combination with Speed Controller SC or Motion Controller MC
6356	Encoder combination	Motor without Hall sensors cable for combination with Encoder AEMTL

Connection

Function	Colour
Phase C	yellow
Phase B	orange
Phase A	brown
GND	black
U_{DD} (+5V)	red
Hall sensor C	grey
Hall sensor B	blue
Hall sensor A	green

Standard cable

3 single wires, material PTFE, AWG 20, Phase A/B/C

5 single wires, material PTFE, AWG 26, Hall A/B/C, U_{DD}, GND

Note

With the connection cable the terminal resistance is increased typ. by 0,008 Ω.

Product combination

Precision Gearheads / Lead Screws	Encoders	Drive Electronics	Cables / Accessories
22GPT	IE3-1024	SC 5008 S	To view our large range of accessory parts, please refer to the "Accessories" chapter.
26/1R	IE3-1024 L	MC 5010 S	
32GPT	IERS3-500		
32/3R	IERS3-500 L		
22L ... ML	IER3-10000		
22L ... SB	IER3-10000 L		
22L ... PB	AEMT-12/16 L		
32L ... TL	AES-4096 L		
32L ... ML			
32L ... SB			
32L ... PB			

© DR. FRITZ FAULHABER GMBH & CO. KG
Specifications subject to change without notice.

Brushless DC-Servomotors 158 mNm

4 Pole Technology 152 W

Series 3274 ... BP4

Values at 22°C and nominal voltage		3274 G	012 BP4	018 BP4	024 BP4	036 BP4	048 BP4	
1 Nominal voltage	U_N		12	18	24	36	48	V
2 Terminal resistance, phase-phase	R		0,063	0,139	0,253	0,557	1,01	Ω
3 Efficiency, max.	$\eta_{max.}$		88	88	88	88	88	%
4 No-load speed	n_0		8 820	9 090	8 820	9 090	8 820	min^{-1}
5 No-load current, typ. (with shaft ø 5 mm)	I_0		0,76	0,534	0,38	0,267	0,19	A
6 Stall torque	M_H		2 660	2 650	2 650	2 640	2 650	mNm
7 Friction torque, static	C_0		2,04	2,04	2,04	2,04	2,04	mNm
8 Friction torque, dynamic	C_V		$9{,}24 \cdot 10^{-4}$	$9{,}24 \cdot 10^{-4}$	$9{,}24 \cdot 10^{-4}$	$9{,}24 \cdot 10^{-4}$	$9{,}24 \cdot 10^{-4}$	mNm/min^{-1}
9 Speed constant	k_n		680	465	340	233	170	min^{-1}/V
10 Back-EMF constant	k_E		1,47	2,15	2,94	4,3	5,88	mV/min^{-1}
11 Torque constant	k_M		14	20,5	28,1	41,1	56,2	mNm/A
12 Current constant	k_I		0,071	0,049	0,036	0,024	0,018	A/mNm
13 Slope of n-M curve	$\Delta n/\Delta M$		3,05	3,15	3,06	3,16	3,06	min^{-1}/mNm
14 Terminal inductance, phase-phase	L		16	34,3	64,2	137,1	257	µH
15 Mechanical time constant	τ_m		1,53	1,58	1,54	1,59	1,54	ms
16 Rotor inertia	J		48	48	48	48	48	gcm^2
17 Angular acceleration	$\alpha_{max.}$		555	552	553	550	553	$\cdot 10^3 rad/s^2$
18 Thermal resistance	R_{th1} / R_{th2}	1,1 / 7,9						K/W
19 Thermal time constant	τ_{w1} / τ_{w2}	22 / 1 100						s
20 Operating temperature range:								
– motor		-40 ... +125						°C
– winding, max. permissible		+150						°C
21 Shaft bearings		ball bearings, preloaded						
22 Shaft load max.:								
– with shaft diameter		5						mm
– radial at 3 000 min^{-1} (5 mm from mounting flange)		50						N
– axial at 3 000 min^{-1} (push / pull)		5						N
– axial at standstill (push / pull)		50						N
23 Shaft play:								
– radial	≤	0,015						mm
– axial	=	0						mm
24 Housing material		stainless steel						
25 Mass		325						g
26 Direction of rotation		electronically reversible						
27 Speed up to	$n_{max.}$	16 000						min^{-1}
28 Number of pole pairs		2						
29 Hall sensors		digital						
30 Magnet material		NdFeB						
Rated values for continuous operation								
31 Rated torque	M_N		158	153	158	153	158	mNm
32 Rated current (thermal limit)	I_N		13,8	9,18	6,88	4,58	3,44	A
33 Rated speed	n_N		8 420	8 660	8 420	8 660	8 420	min^{-1}

Note: Rated values are calculated with nominal voltage and at a 22°C ambient temperature. The R_{th2} value has been reduced by 50%.

Note:

The diagram indicates the recommended speed in relation to the available torque at the output shaft for a given ambient temperature of 22°C.

The diagram shows the motor in a completely insulated as well as thermally coupled condition (R_{th2} 50% reduced).

The nominal voltage (U_N) curve shows the operating point at nominal voltage in the insulated and thermally coupled condition. Any points of operation above the curve at nominal voltage will require a higher operating voltage. Any points below the nominal voltage curve will require less voltage.

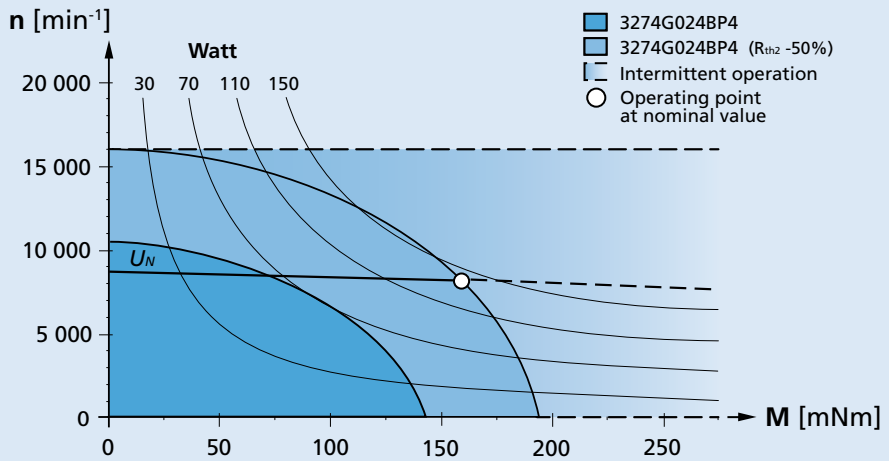

Recommended operation areas (example: nominal voltage 24 V)

For notes on technical data and lifetime performance refer to "Technical Information".

Backwards

© DR. FRITZ FAULHABER GMBH & CO. KG
Specifications subject to change without notice.

Dimensional drawing

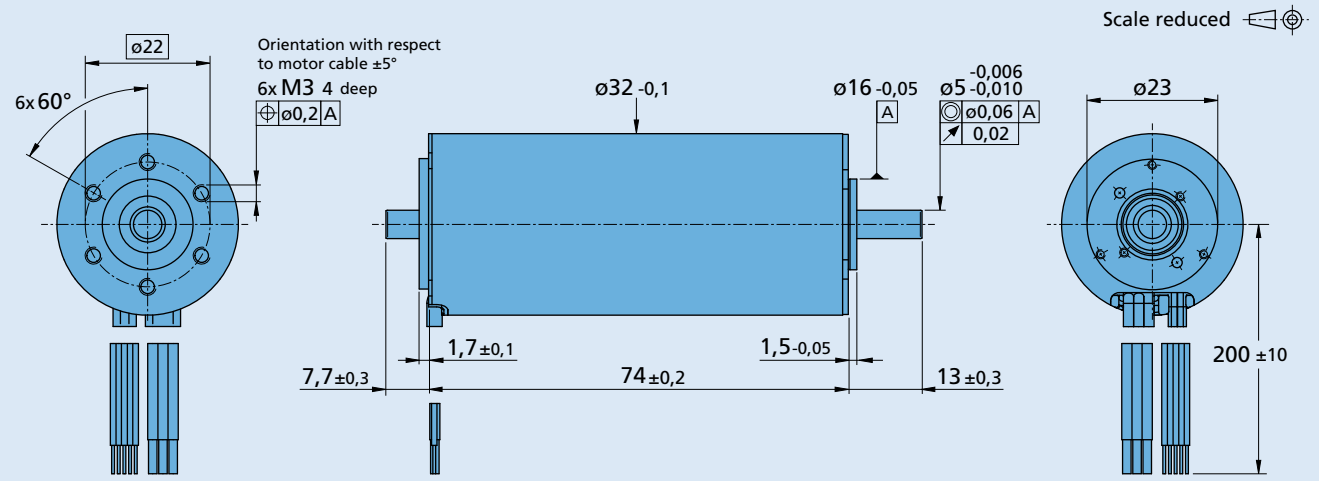

3274 G ... BP4

Option, cable and connection information

Example product designation: **3274G024BP4-3692**

Option	Type	Description
Y158	Shaft end	Motor without second shaft end
3692	Controller combination	Analog Hall sensors for combination with Speed Controller SC or Motion Controller MC
6356	Encoder combination	Motor without Hall sensors cable for combination with Encoder AEMTL

Connection

Function	Colour
Phase C	yellow
Phase B	orange
Phase A	brown
GND	black
U_{DD} (+5V)	red
Hall sensor C	grey
Hall sensor B	blue
Hall sensor A	green

Standard cable

3 single wires, material FEP, AWG 18, Phase A/B/C

5 single wires, material PTFE, AWG 26, Hall A/B/C, U_{DD}, GND

Product combination

Precision Gearheads / Lead Screws	Encoders	Drive Electronics	Cables / Accessories
32GPT	IE3-1024	SC 5008 S	MBZ
32/3R	IE3-1024 L	MC 5010 S	
38/1	IERS3-500		To view our large range of accessory parts, please refer to the “Accessories” chapter.
38/1 S	IERS3-500 L		
38/2	IER3-10000		
38/2 S	IER3-10000 L		
42GPT	AEMT-12/16 L		
32L ... TL	AES-4096 L		
32L ... ML			
32L ... SB			
32L ... PB			

© DR. FRITZ FAULHABER GMBH & CO. KG
Specifications subject to change without notice.

FAULHABER B-Flat

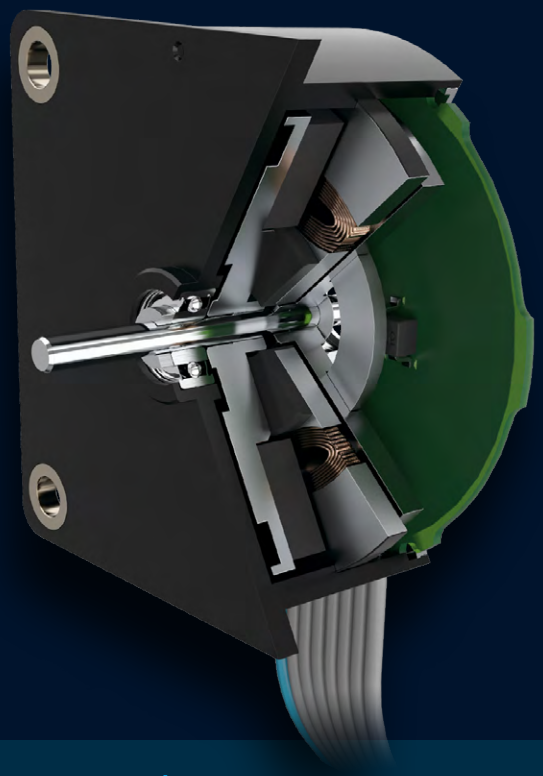

FAULHABER B-Flat

1509...B	with integrated Hall Sensors	0.5 mNm
1515...B	with integrated Gearhead	30 mNm
2610...B	with integrated Hall Sensors	3.1 mNm
2622...B	with integrated Gearhead	100 mNm

Backwards

Brushless DC-Flat Motors

0,5 mNm

4 Pole Technology

1,5 W

Series 1509 ... B

Values at 22°C and nominal voltage		1509 T		006 B	012 B	
1	Nominal voltage	U_N		6	12	V
2	Terminal resistance, phase-phase	R		22	92,7	Ω
3	Efficiency, max.	$\eta_{max.}$		54	53	%
4	No-load speed	n_0		15 000	14 900	min^{-1}
5	No-load current, typ. (with shaft ø 1,5 mm)	I_0		0,019	0,009	A
6	Stall torque	M_H		0,953	0,904	mNm
7	Friction torque, static	C_0		0,019	0,019	mNm
8	Friction torque, dynamic	C_V		$3{,}42 \cdot 10^{-6}$	$3{,}42 \cdot 10^{-6}$	mNm/min^{-1}
9	Speed constant	k_n		2 682	1 339	min^{-1}/V
10	Back-EMF constant	k_E		0,373	0,747	mV/min^{-1}
11	Torque constant	k_M		3,56	7,13	mNm/A
12	Current constant	k_I		0,281	0,14	A/mNm
13	Slope of n-M curve	$\Delta n/\Delta M$		16 577	17 423	min^{-1}/mNm
14	Terminal inductance, phase-phase	L		570	2 282	µH
15	Mechanical time constant	τ_m		120	126	ms
16	Rotor inertia	J		0,69	0,69	gcm^2
17	Angular acceleration	$\alpha_{max.}$		14	13	$\cdot 10^3 rad/s^2$
18	Thermal resistance	R_{th1} / R_{th2}	65 / 45			K/W
19	Thermal time constant	τ_{w1} / τ_{w2}	12 / 133			s
20	Operating temperature range:					
	– motor		-25 ... +80			°C
	– winding, max. permissible		+80			°C
21	Shaft bearings		ball bearings, preloaded			
22	Shaft load max.:					
	– with shaft diameter		1,5			mm
	– radial at 3 000 min^{-1} (3 mm from mounting flange)		2			N
	– axial at 3 000 min^{-1} (push only)		2			N
	– axial at standstill (push only)		15			N
23	Shaft play:					
	– radial	≤	0,015			mm
	– axial	=	0			mm
24	Housing material		plastic			
25	Mass		6,9			g
26	Direction of rotation		electronically reversible			
27	Speed up to	$n_{max.}$	40 000			min^{-1}
28	Number of pole pairs		2			
29	Hall sensors		digital			
30	Magnet material		NdFeB			

Rated values for continuous operation						
31	Rated torque	M_N		0,45	0,44	mNm
32	Rated current (thermal limit)	I_N		0,147	0,071	A
33	Rated speed	n_N		5 860	5 550	min^{-1}

Note: Rated values are calculated with nominal voltage and at a 22°C ambient temperature. The R_{th2} value has been reduced by 25%.

Note:

The diagram indicates the recommended speed in relation to the available torque at the output shaft for a given ambient temperature of 22°C.

The diagram shows the motor in a completely insulated as well as thermally coupled condition (R_{th2} 50% reduced).

The nominal voltage (U_N) curve shows the operating point at nominal voltage in the insulated and thermally coupled condition. Any points of operation above the curve at nominal voltage will require a higher operating voltage. Any points below the nominal voltage curve will require less voltage.

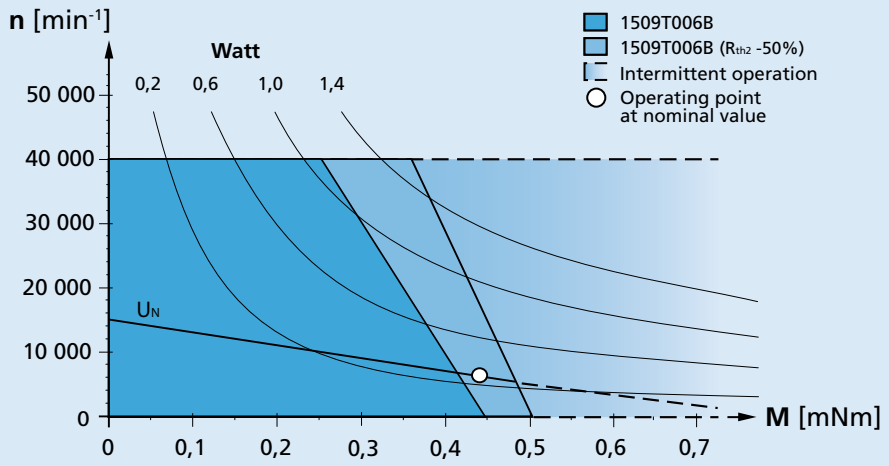

Recommended operation areas (example: nominal voltage 6V)

© DR. FRITZ FAULHABER GMBH & CO. KG
Specifications subject to change without notice.

Dimensional drawing

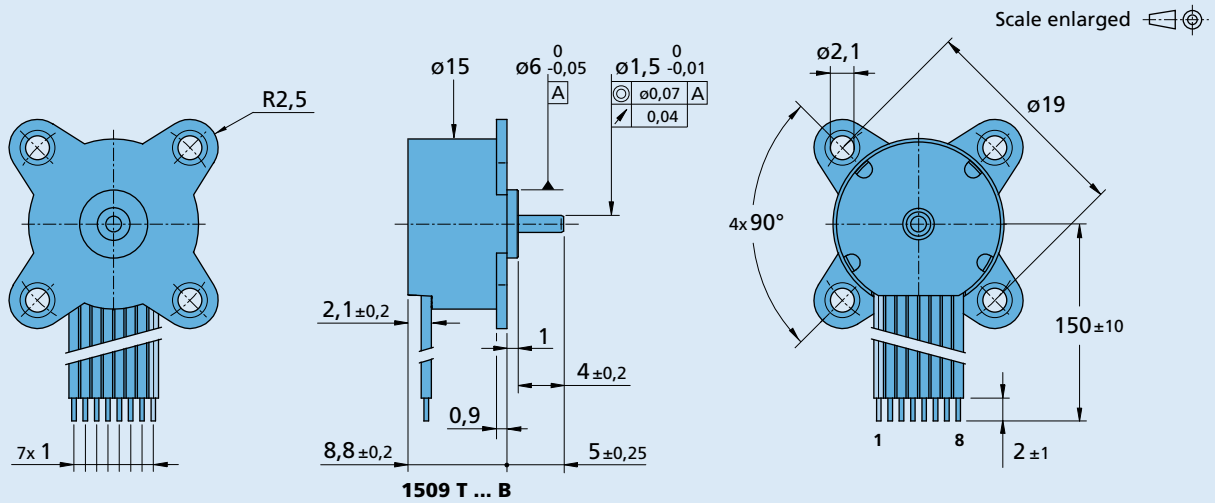

Option, cable and connection information

Example product designation: **1509T006B-X4192**

Option	Type	Description
X4192	Bearing lubrication	For vacuum of 10^{-5} Pa @ 22°C
4082	Temperature range	Extended temperature range (-40…+85°C)

Connection

No.	Function
1	Phase C
2	Phase B
3	Phase A
4	GND
5	U_{DD} (+5V)
6	Hall sensor C
7	Hall sensor B
8	Hall sensor A

Standard cable

Insulation: PVC
8 conductors, AWG 28
pitch 1 mm, wires tinned

Product combination

Precision Gearheads / Lead Screws	Encoders	Drive Electronics	Cables / Accessories
		SC 1801 P SC 1801 S	

© DR. FRITZ FAULHABER GMBH & CO. KG
Specifications subject to change without notice.

Brushless DC-Gearmotors 30 mNm

4 Pole Technology

Series 1515 ... B

Values at 22°C and nominal voltage		1515 U		006 B	012 B	
1	Nominal voltage	U_N		6	12	V
2	Terminal resistance, phase-phase	R		22	92,7	Ω
3	Efficiency, max.	$\eta_{max.}$		54	53	%
4	No-load speed	n_o		15 000	14 900	min^{-1}
5	No-load current, typ.	I_o		0,019	0,009	A
6	Stall torque	M_H		0,953	0,904	mNm
7	Friction torque, static	C_o		0,019	0,019	mNm
8	Friction torque, dynamic	C_v		$3,42 \cdot 10^{-6}$	$3,42 \cdot 10^{-6}$	mNm/min^{-1}
9	Speed constant	k_n		2 682	1 339	min^{-1}/V
10	Back-EMF constant	k_E		0,373	0,747	mV/min^{-1}
11	Torque constant	k_M		3,56	7,13	mNm/A
12	Current constant	k_I		0,281	0,14	A/mNm
13	Slope of n-M curve	$\Delta n/\Delta M$		16 577	17 423	min^{-1}/mNm
14	Terminal inductance, phase-phase	L		570	2 282	µH
15	Mechanical time constant	τ_m		120	126	ms
16	Rotor inertia	J		0,69	0,69	gcm^2
17	Angular acceleration	$\alpha_{max.}$		14	13	$\cdot 10^3 rad/s^2$
18	Thermal resistance	R_{th1} / R_{th2}	65 / 45			K/W
19	Thermal time constant	τ_{w1} / τ_{w2}	12 / 130			s

Integrated Gearhead			
Housing material		plastic	
Geartrain material		metal	
Backlash, at no-load	≤	4	°
Bearings on output shaft		plastic / brass bearing	
Shaft load max.:			
– radial (5 mm from mounting face)	≤	1,4	N
– axial	≤	0,3	N
Shaft press fit force, max.	≤	5	N
Shaft play:			
– radial (5 mm from mounting face)	≤	0,08	mm
– axial	≤	0,25	mm
Operating temperature range		– 25 ... + 80	°C

Specifications

reduction ratio (rounded)	output speed up to n_{max} min^{-1}	weight with motor g	output torque continuous operation M_{max} mNm	output torque intermittent operation M_{max} mNm	direction of rotation (reversible)	efficiency %
6 : 1	779	6,9	1,4	3	=	81
13 : 1	372	7,0	2,8	5	≠	73
39 : 1	129	7,2	7,0	10	=	60
112 : 1	45	7,4	19,8	30	≠	59
324 : 1	15	7,7	30,0	50	=	53

Note: output speed at 5000 min^{-1} input speed. Based on motor 1509 ... B.

© DR. FRITZ FAULHABER GMBH & CO. KG
Specifications subject to change without notice.
www.faulhaber.com

Dimensional drawing

Scale enlarged

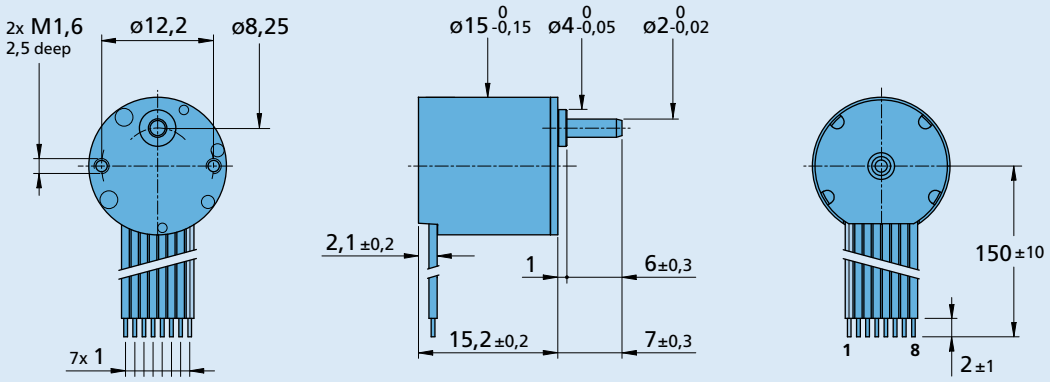

1515 U ... B

Option, cable and connection information

Example product designation: **1515U006B-4082**

Option	Type	Description
4082	Temperature range	Extended temperature range (-40…+85°C)

Connection

No.	Function
1	Phase C
2	Phase B
3	Phase A
4	GND
5	U_{DD} (+5V)
6	Hall sensor C
7	Hall sensor B
8	Hall sensor A

Standard cable

Insulation: PVC
8 conductors, AWG 28
pitch 1 mm, wires tinned

Product Combination

Precision Gearheads / Lead Screws	Encoders	Drive Electronics	Cables / Accessories
		SC 1801 P SC 1801 S	To view our large range of accessory parts, please refer to the “Accessories” chapter.

© DR. FRITZ FAULHABER GMBH & CO. KG
Specifications subject to change without notice.
www.faulhaber.com

Brushless DC-Flat Motors

3,1 mNm

4 Pole Technology

9 W

Series 2610 ... B

Values at 22°C and nominal voltage		2610 T	006 B	012 B	
1 Nominal voltage	U_N		6	12	V
2 Terminal resistance, phase-phase	R		6,97	28,2	Ω
3 Efficiency, max.	$\eta_{max.}$		79	79	%
4 No-load speed	n_0		6 400	6 400	min^{-1}
5 No-load current, typ. (with shaft ø 1,5 mm)	I_0		0,01	0,005	A
6 Stall torque	M_H		7,543	7,453	mNm
7 Friction torque, static	C_0		0,035	0,035	mNm
8 Friction torque, dynamic	C_V		$8{,}85 \cdot 10^{-6}$	$8{,}85 \cdot 10^{-6}$	mNm/min^{-1}
9 Speed constant	k_n		1 085	543	min^{-1}/V
10 Back-EMF constant	k_E		0,922	1,842	mV/min^{-1}
11 Torque constant	k_M		8,8	17,6	mNm/A
12 Current constant	k_I		0,114	0,057	A/mNm
13 Slope of n-M curve	$\Delta n/\Delta M$		859	870	min^{-1}/mNm
14 Terminal inductance, phase-phase	L		486	1 945	µH
15 Mechanical time constant	τ_m		71	72	ms
16 Rotor inertia	J		7,9	7,9	gcm^2
17 Angular acceleration	$\alpha_{max.}$		9	9	$\cdot 10^3 rad/s^2$
18 Thermal resistance	R_{th1} / R_{th2}	33 / 27			K/W
19 Thermal time constant	τ_{w1} / τ_{w2}	23,6 / 222			s
20 Operating temperature range:					
– motor		-25 ... +80			°C
– winding, max. permissible		+80			°C
21 Shaft bearings		ball bearings, preloaded			
22 Shaft load max.:					
– with shaft diameter		1,5			mm
– radial at 3 000 min^{-1} (3 mm from mounting flange)		4			N
– axial at 3 000 min^{-1} (push only)		3,5			N
– axial at standstill (push only)		17,5			N
23 Shaft play:					
– radial	≤	0,015			mm
– axial	=	0			mm
24 Housing material		plastic			
25 Mass		20,1			g
26 Direction of rotation		electronically reversible			
27 Speed up to	$n_{max.}$	40 000			min^{-1}
28 Number of pole pairs		2			
29 Hall sensors		digital			
30 Magnet material		NdFeB			

Rated values for continuous operation					
31 Rated torque	M_N		2,87	2,85	mNm
32 Rated current (thermal limit)	I_N		0,356	0,177	A
33 Rated speed	n_N		3 430	3 410	min^{-1}

Note: Rated values are calculated with nominal voltage and at a 22°C ambient temperature. The R_{th2} value has been reduced by 25%.

Note:

The diagram indicates the recommended speed in relation to the available torque at the output shaft for a given ambient temperature of 22°C.

The diagram shows the motor in a completely insulated as well as thermally coupled condition (R_{th2} 50% reduced).

The nominal voltage (U_N) curve shows the operating point at nominal voltage in the insulated and thermally coupled condition. Any points of operation above the curve at nominal voltage will require a higher operating voltage. Any points below the nominal voltage curve will require less voltage.

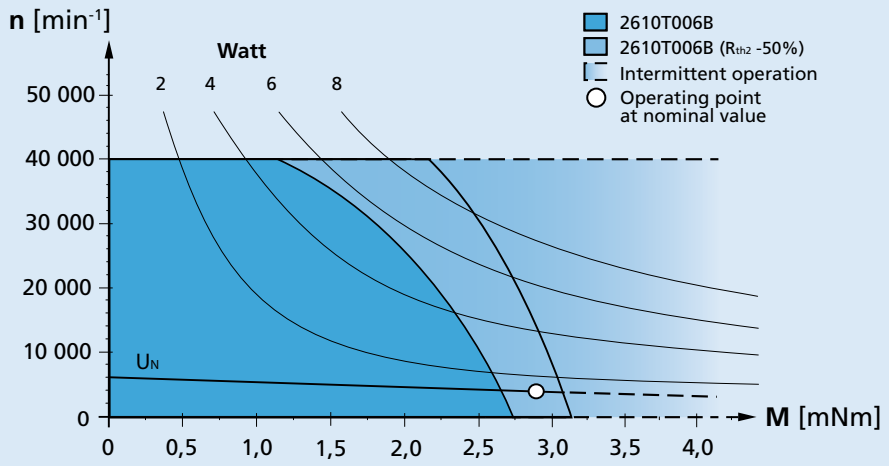

Recommended operation areas (example: nominal voltage 6V)

For notes on technical data and lifetime performance refer to "Technical Information".

Backwards

© DR. FRITZ FAULHABER GMBH & CO. KG
Specifications subject to change without notice.

Dimensional drawing

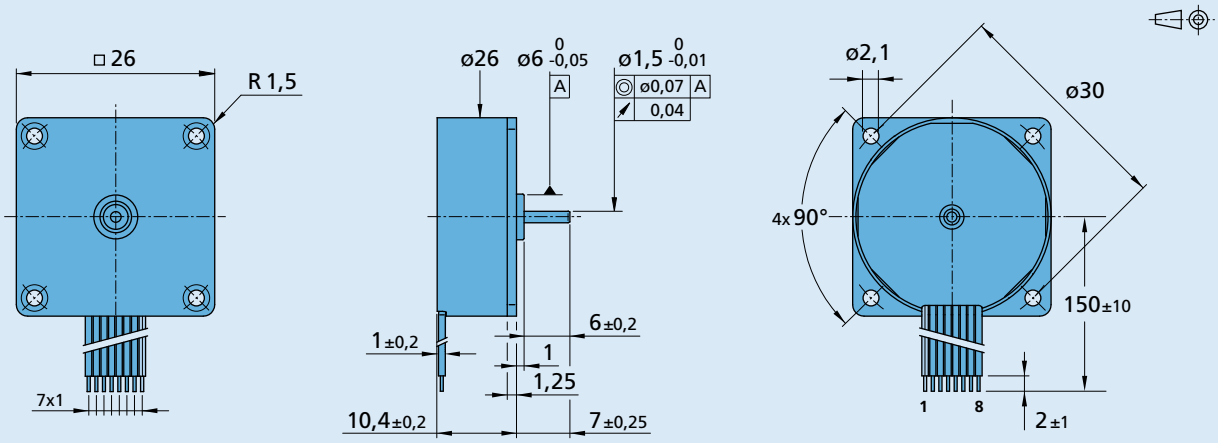

2610 T ... B

Option, cable and connection information

Example product designation: **2610T006B-Y4192**

Option	Type	Description
Y4192	Bearing lubrication	For vacuum of 10^{-5} Pa @ 22°C
4082	Temperature range	Extended temperature range (-40…+85°C)

Connection

No.	Function
1	Phase C
2	Phase B
3	Phase A
4	GND
5	U_{DD} (+5V)
6	Hall sensor C
7	Hall sensor B
8	Hall sensor A

Standard cable

Insulation: PVC
8 conductors, AWG 28
pitch 1 mm, wires tinned

Product combination

Precision Gearheads / Lead Screws	Encoders	Drive Electronics	Cables / Accessories
		SC 1801 P SC 1801 S	

© DR. FRITZ FAULHABER GMBH & CO. KG
Specifications subject to change without notice.

Brushless DC-Gearmotors 100 mNm

4 Pole Technology

Series 2622 ... B

Values at 22°C and nominal voltage		2622 S		006 B	012 B	
1	Nominal voltage	U_N		6	12	V
2	Terminal resistance, phase-phase	R		6,97	28,2	Ω
3	Efficiency, max.	$\eta_{max.}$		79	79	%
4	No-load speed	n_o		6 400	6 400	min^{-1}
5	No-load current, typ.	I_o		0,01	0,005	A
6	Stall torque	M_H		7,543	7,453	mNm
7	Friction torque, static	C_o		0,035	0,035	mNm
8	Friction torque, dynamic	C_v		$8,85 \cdot 10^{-6}$	$8,85 \cdot 10^{-6}$	mNm/min^{-1}
9	Speed constant	k_n		1 085	543	min^{-1}/V
10	Back-EMF constant	k_E		0,922	1,842	mV/min^{-1}
11	Torque constant	k_M		8,8	17,6	mNm/A
12	Current constant	k_I		0,114	0,057	A/mNm
13	Slope of n-M curve	$\Delta n/\Delta M$		859	870	min^{-1}/mNm
14	Terminal inductance, phase-phase	L		486	1 945	µH
15	Mechanical time constant	τ_m		71	72	ms
16	Rotor inertia	J		7,9	7,9	gcm^2
17	Angular acceleration	$\alpha_{max.}$		9	9	$\cdot 10^3 rad/s^2$
18	Thermal resistance	R_{th1} / R_{th2}	33 / 27			K/W
19	Thermal time constant	τ_{w1} / τ_{w2}	23,6 / 222			s

Integrated Gearhead			
Housing material		plastic	
Geartrain material		metal	
Backlash, at no-load	≤	4	°
Bearings on output shaft		ball bearing	
Shaft load max.:			
– radial (5 mm from mounting face)	≤	15	N
– axial	≤	5	N
Shaft press fit force, max.	≤	10	N
Shaft play:			
– radial (5 mm from mounting face)	≤	0,03	mm
– axial	≤	0,25	mm
Operating temperature range		– 25 ... + 80	°C

Specifications

reduction ratio (rounded)	output speed up to n_{max} min^{-1}	weight with motor g	output torque continuous operation M_{max} mNm	output torque intermittent operation M_{max} mNm	direction of rotation (reversible)	efficiency %
8 : 1	635	25	9	30	=	81
22 : 1	223	26	23	75	≠	73
33 : 1	151	26	30	100	=	60
112 : 1	44	27	93	180	≠	59
207 : 1	24	27	100	180	=	53
361 : 1	14	27	100	180	=	53
814 : 1	6	28	100	180	=	43
1 257 : 1	4	29	100	180	=	43

Note: output speed at 5000 min^{-1} input speed. Based on motor 2610 ... B.

© DR. FRITZ FAULHABER GMBH & CO. KG
Specifications subject to change without notice.
www.faulhaber.com

Dimensional drawing

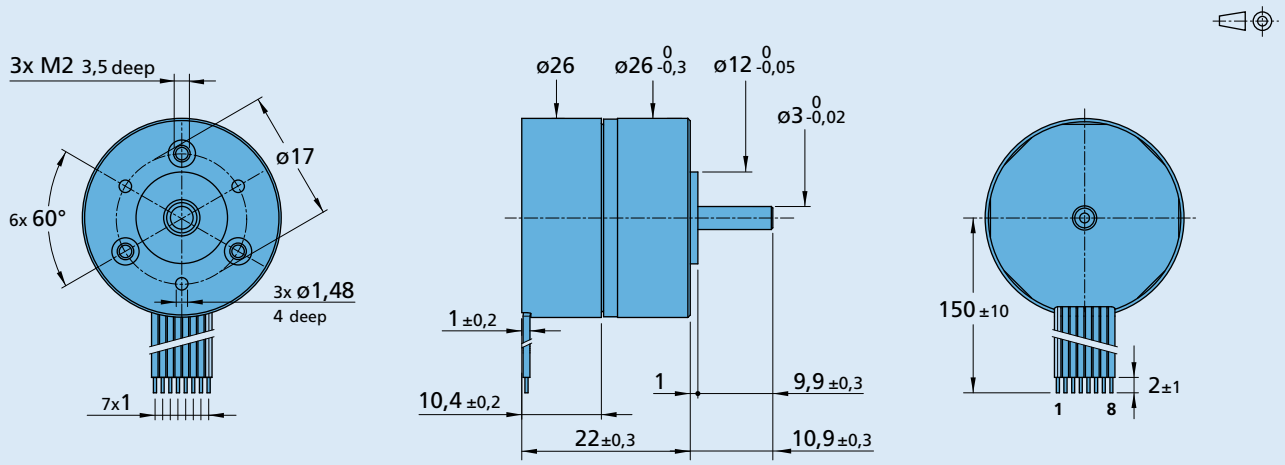

2622 S ... B

Option, cable and connection information

Example product designation: **2622S006B-4082**

Option	Type	Description
4082	Temperature range	Extended temperature range (-40…+85°C)

Connection

No.	Function
1	Phase C
2	Phase B
3	Phase A
4	GND
5	U_{DD} (+5V)
6	Hall sensor C
7	Hall sensor B
8	Hall sensor A

Standard cable

Insulation: PVC
8 conductors, AWG 28
pitch 1 mm, wires tinned

Product Combination

Precision Gearheads / Lead Screws	Encoders	Drive Electronics	Cables / Accessories
		SC 1801 P SC 1801 S	To view our large range of accessory parts, please refer to the “Accessories” chapter.

© DR. FRITZ FAULHABER GMBH & CO. KG
Specifications subject to change without notice.
www.faulhaber.com

FAULHABER BXT

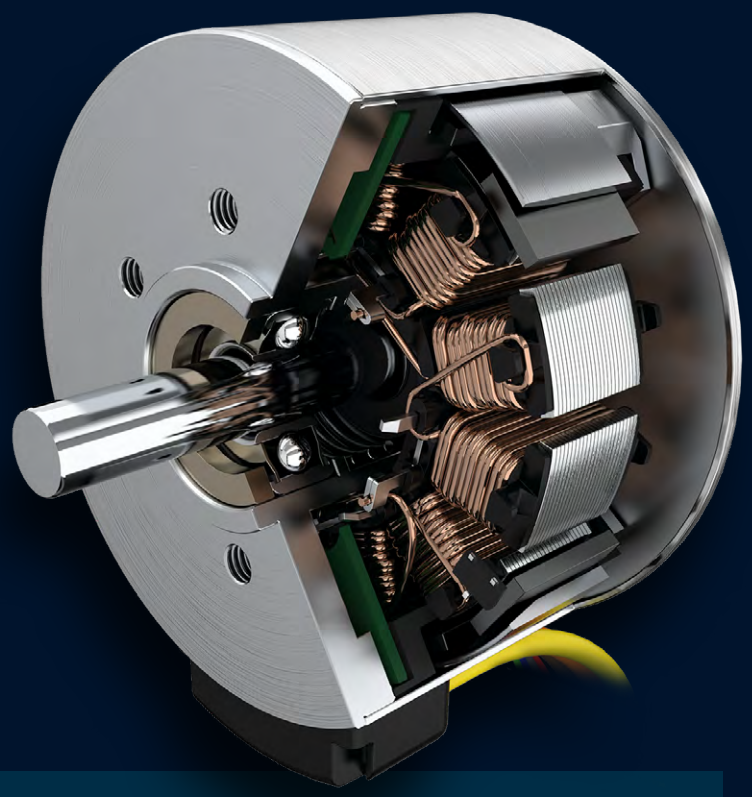

FAULHABER BXT

2214...BXT R Ext. rotor technology, without housing	10.2 mNm
2214...BXT H Ext. rotor technology, with housing	9.7 mNm
3216...BXT R Ext. rotor technology, without housing	41.0 mNm
3216...BXT H Ext.rotor technology, with housing	38.0 mNm
4221...BXT R Ext.rotor technology, without housing	134.0 mNm
4221...BXT H Ext.rotor technology, with housing	112.0 mNm

Backwards

Brushless DC-Flat Motors

10,2 mNm

External rotor technology, without housing

9 W

Series 2214 ... BXT R

Values at 22°C and nominal voltage		2214 S	006 BXT R	012 BXT R	024 BXT R	
1 Nominal voltage	U_N		6	12	24	V
2 Terminal resistance, phase-phase	R		2,42	6,95	25,9	Ω
3 Efficiency, max.	$\eta_{max.}$		72	73	70	%
4 No-load speed	n_0		5 740	6 500	6 960	min^{-1}
5 No-load current, typ. (with shaft ø 3 mm)	I_0		0,062	0,039	0,016	A
6 Starting torque	M_A		23,5	29,1	29,6	mNm
7 Speed constant	k_n		997	561	296	min^{-1}/V
8 Back-EMF constant	k_E		1	1,78	3,37	mV/min^{-1}
9 Torque constant	k_M		9,58	17	32,2	mNm/A
10 Current constant	k_I		0,104	0,0588	0,031	A/mNm
11 Slope of n-M curve	$\Delta n/\Delta M$		252	229	238	min^{-1}/mNm
12 Terminal inductance, phase-phase	L		271	884	3 150	µH
13 Mechanical time constant	τ_m		8,7	7,92	8,22	ms
14 Rotor inertia	J		3,3	3,3	3,3	gcm^2
15 Angular acceleration	$\alpha_{max.}$		71,1	88,2	89,7	$\cdot 10^3 rad/s^2$
16 Operating temperature range:						
– motor		-40 ... +100				°C
– winding, max. permissible		+125				°C
17 Shaft bearings		ball bearings, preloaded				
18 Shaft load max.:						
– with shaft diameter		3				mm
– radial at 3 000 min^{-1} (5 mm from mounting flange)		6				N
– axial at 3 000 min^{-1} (push / pull)		2				N
– axial at standstill (push / pull)		50				N
19 Shaft play:						
– radial	≤	0,015				mm
– axial	=	0				mm
20 Mass		25,5				g
21 Direction of rotation		electronically reversible				
22 Speed up to	$n_{max.}$	10 000				min^{-1}
23 Number of pole pairs		7				
24 Hall sensors		digital				
25 Magnet material		NdFeB				

Rated values for continuous operation						
26 Rated torque	M_N		9,5	10	10,2	mNm
27 Rated current (thermal limit)	I_N		1,18	0,66	0,368	A
28 Rated speed	n_N		1 200	2 590	2 600	min^{-1}
29 Rated slope of n-M curve	$\Delta n/\Delta M$		478	391	427	min^{-1}/mNm

Note: Rated values are measured at nominal voltage and 22°C ambient temperature.

Note:
The display shows the range of possible operation points of the drives at a given ambient temperature of 22°C.

The diagram indicates the recommended speed in relation to the available torque at the output shaft.
It includes the assembly on a plastic- as well as on a metal flange (assembly method: IM B 5).

The nominal voltage linear slope describes the maximal achievable operating points at nominal voltage.
Any points of operation above this linear slope will require a supply voltage $U_{mot} > U_N$.

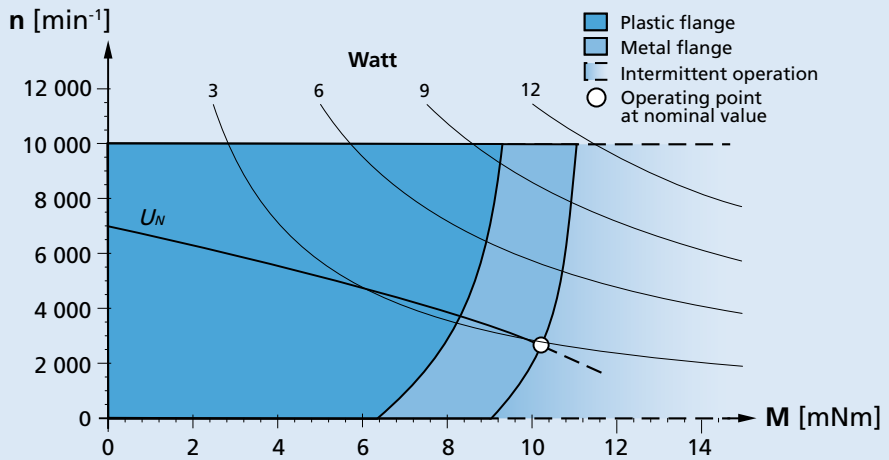

Recommended operation areas (example: nominal voltage 24V)

For notes on technical data and lifetime performance refer to "Technical Information".

Backwards

© DR. FRITZ FAULHABER GMBH & CO. KG
Specifications subject to change without notice.

Dimensional drawing

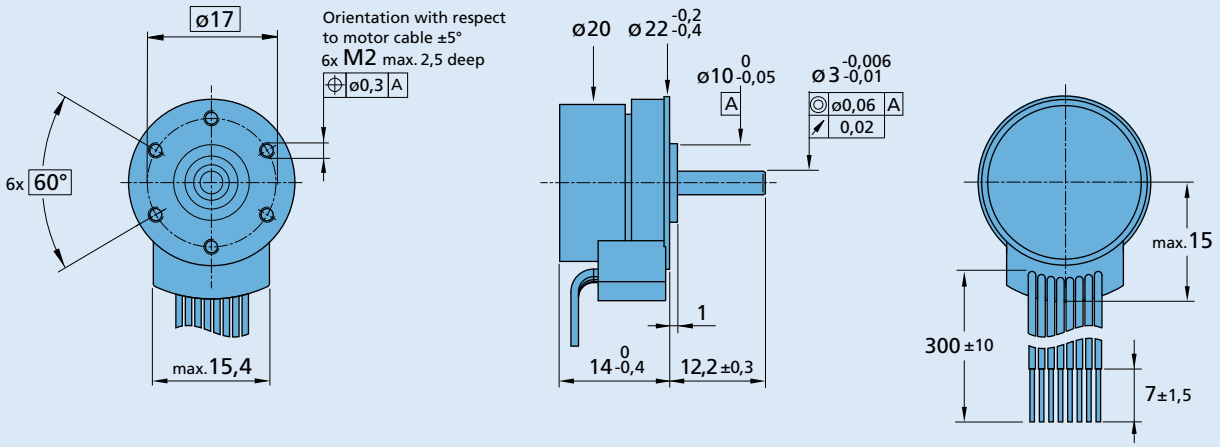

2214 S ... BXT R

Option, cable and connection information

Example product designation: **2214S012BXTR-3830**

Option	Type	Description
3830	Connector	Standard cable with connector MOLEX Microfit 3.0, 43025-0800, recommended mating connector 43020-0800
4337	Gearhead combination	For combination with gearhead 20/1R

Connection

No.	Function	Colour
1	Phase C	yellow
2	Phase B	orange
3	Phase A	brown
4	GND	black
5	U_{DD} (+5V)	red
6	Hall sensor C	grey
7	Hall sensor B	blue
8	Hall sensor A	green

Standard cable

Single wires, material PVC,
AWG 26, Phase A/B/C
AWG 26, Hall A/B/C, U_{DD}, GND

Product combination

Precision Gearheads / Lead Screws	Encoders	Drive Electronics	Cables / Accessories
20/1R 22GPT 26/1R 22L ... ML 22L ... SB 22L ... PB		SC 1801 P SC 1801 S SC 2402 P SC 2804 S	To view our large range of accessory parts, please refer to the "Accessories" chapter.

© DR. FRITZ FAULHABER GMBH & CO. KG
Specifications subject to change without notice.

Brushless DC-Flat Motors

9,7 mNm

External rotor technology, with housing

6 W

Series 2214 ... BXT H

Values at 22°C and nominal voltage		2214 S	006 BXT H	012 BXT H	024 BXT H	
1 Nominal voltage	U_N		6	12	24	V
2 Terminal resistance, phase-phase	R		2,42	6,95	25,9	Ω
3 Efficiency, max.	$\eta_{max.}$		72	74	69	%
4 No-load speed	n_0		5 760	6 500	6 970	min^{-1}
5 No-load current, typ. (with shaft ø 3 mm)	I_0		0,061	0,04	0,016	A
6 Starting torque	M_A		23,5	29,1	29,6	mNm
7 Speed constant	k_n		997	561	296	min^{-1}/V
8 Back-EMF constant	k_E		1	1,78	3,37	mV/min^{-1}
9 Torque constant	k_M		9,58	17	32,2	mNm/A
10 Current constant	k_I		0,104	0,0588	0,031	A/mNm
11 Slope of n-M curve	$\Delta n/\Delta M$		252	229	238	min^{-1}/mNm
12 Terminal inductance, phase-phase	L		271	884	3 150	µH
13 Mechanical time constant	τ_m		8,7	7,92	8,22	ms
14 Rotor inertia	J		3,3	3,3	3,3	gcm^2
15 Angular acceleration	$\alpha_{max.}$		71,1	88,2	89,7	$\cdot 10^3 rad/s^2$
16 Operating temperature range:						
– motor		-40 ... +100				°C
– winding, max. permissible		+125				°C
17 Shaft bearings		ball bearings, preloaded				
18 Shaft load max.:						
– with shaft diameter		3				mm
– radial at 3 000 min^{-1} (5 mm from mounting flange)		6				N
– axial at 3 000 min^{-1} (push / pull)		2				N
– axial at standstill (push / pull)		50				N
19 Shaft play:						
– radial	≤	0,015				mm
– axial	=	0				mm
20 Mass		28,9				g
21 Direction of rotation		electronically reversible				
22 Speed up to	$n_{max.}$	10 000				min^{-1}
23 Number of pole pairs		7				
24 Hall sensors		digital				
25 Magnet material		NdFeB				

Rated values for continuous operation						
26 Rated torque	M_N		9,4	9,7	9,7	mNm
27 Rated current (thermal limit)	I_N		1,16	0,653	0,36	A
28 Rated speed	n_N		1 260	2 630	2 710	min^{-1}
29 Rated slope of n-M curve	$\Delta n/\Delta M$		479	399	439	min^{-1}/mNm

Note: Rated values are measured at nominal voltage and 22°C ambient temperature.

Note:
The display shows the range of possible operation points of the drives at a given ambient temperature of 22°C.

The diagram indicates the recommended speed in relation to the available torque at the output shaft.
It includes the assembly on a plastic- as well as on a metal flange (assembly method: IM B 5).

The nominal voltage linear slope describes the maximal achievable operating points at nominal voltage.
Any points of operation above this linear slope will require a supply voltage $U_{mot} > U_N$.

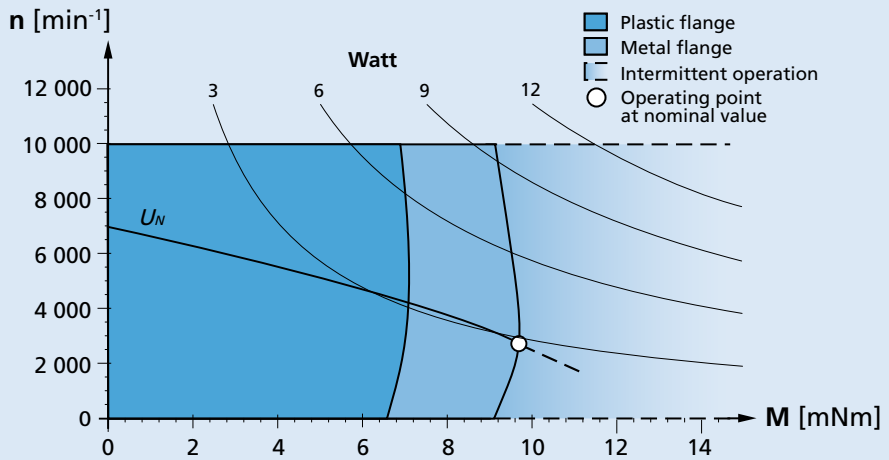

Recommended operation areas (example: nominal voltage 24V)

© DR. FRITZ FAULHABER GMBH & CO. KG
Specifications subject to change without notice.

Dimensional drawing

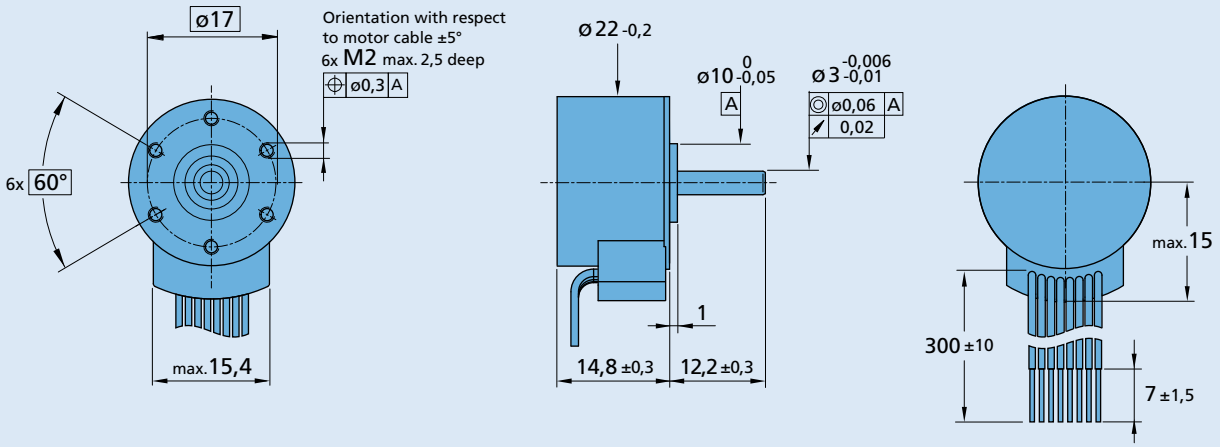

2214 S ... BXT H

Option, cable and connection information

Example product designation: **2214S012BXTH-3830**

Option	Type	Description
3830	Connector	Standard cable with connector MOLEX Microfit 3.0, 43025-0800, recommended mating connector 43020-0800
4337	Gearhead combination	For combination with gearhead 20/1R

Connection

No.	Function	Colour
1	Phase C	yellow
2	Phase B	orange
3	Phase A	brown
4	GND	black
5	U_{DD} (+5V)	red
6	Hall sensor C	grey
7	Hall sensor B	blue
8	Hall sensor A	green

Standard cable

Single wires, material PVC,
AWG 26, Phase A/B/C
AWG 26, Hall A/B/C, U_{DD}, GND

Product combination

Precision Gearheads / Lead Screws	Encoders	Drive Electronics	Cables / Accessories
20/1R 22GPT 26/1R 22L ... ML 22L ... SB 22L ... PB	IE3-1024 IE3-1024 L IEF3-4096 IEF3-4096 L IERS3-500 IERS3-500 L IER3-10000 IER3-10000 L	SC 1801 P SC 1801 S SC 2402 P SC 2804 S MC 3001 B MC 3001 P MC 3603 S MC 5004 P MC 5005 S	To view our large range of accessory parts, please refer to the “Accessories” chapter.

© DR. FRITZ FAULHABER GMBH & CO. KG
Specifications subject to change without notice.

Brushless DC-Flat Motors

41 mNm

External rotor technology, without housing

30 W

Series 3216 ... BXT R

Values at 22°C and nominal voltage	3216 W		009 BXT R	012 BXT R	024 BXT R	
1 Nominal voltage	U_N		9	12	24	V
2 Terminal resistance, phase-phase	R		0,55	0,88	3,26	Ω
3 Efficiency, max.	$\eta_{max.}$		82	83	82	%
4 No-load speed	n_0		6 020	6 240	6 200	min^{-1}
5 No-load current, typ. (with shaft ø 4 mm)	I_0		0,179	0,129	0,084	A
6 Starting torque	M_A		225	245	263	mNm
7 Speed constant	k_n		691	530	267	min^{-1}/V
8 Back-EMF constant	k_E		1,45	1,89	3,75	mV/min^{-1}
9 Torque constant	k_M		13,8	18	35,8	mNm/A
10 Current constant	k_I		0,0724	0,0555	0,0279	A/mNm
11 Slope of n-M curve	$\Delta n/\Delta M$		27,5	25,9	24,3	min^{-1}/mNm
12 Terminal inductance, phase-phase	L		191	331	1 290	µH
13 Mechanical time constant	τ_m		5,28	4,97	4,66	ms
14 Rotor inertia	J		18,3	18,3	18,3	gcm^2
15 Angular acceleration	$\alpha_{max.}$		123	134	144	$\cdot 10^3 rad/s^2$
16 Operating temperature range:						
– motor		-40 ... +100				°C
– winding, max. permissible		+125				°C
17 Shaft bearings		ball bearings, preloaded				
18 Shaft load max.:						
– with shaft diameter		4				mm
– radial at 3 000 min^{-1} (5 mm from mounting flange)		15				N
– axial at 3 000 min^{-1} (push / pull)		3				N
– axial at standstill (push / pull)		50				N
19 Shaft play:						
– radial	≤	0,015				mm
– axial	=	0				mm
20 Mass		57,9				g
21 Direction of rotation		electronically reversible				
22 Speed up to	$n_{max.}$	10 000				min^{-1}
23 Number of pole pairs		7				
24 Hall sensors		digital				
25 Magnet material		NdFeB				

Rated values for continuous operation						
26 Rated torque	M_N		39,5	40	41	mNm
27 Rated current (thermal limit)	I_N		2,87	2,28	1,17	A
28 Rated speed	n_N		3 320	3 750	4 150	min^{-1}
29 Rated slope of n-M curve	$\Delta n/\Delta M$		68,4	62,3	50	min^{-1}/mNm

Note: Rated values are measured at nominal voltage and 22°C ambient temperature.

Note:

The display shows the range of possible operation points of the drives at a given ambient temperature of 22°C.

The diagram indicates the recommended speed in relation to the available torque at the output shaft.
It includes the assembly on a plastic- as well as on a metal flange (assembly method: IM B 5).

The nominal voltage linear slope describes the maximal achievable operating points at nominal voltage.
Any points of operation above this linear slope will require a supply voltage $U_{mot} > U_N$.

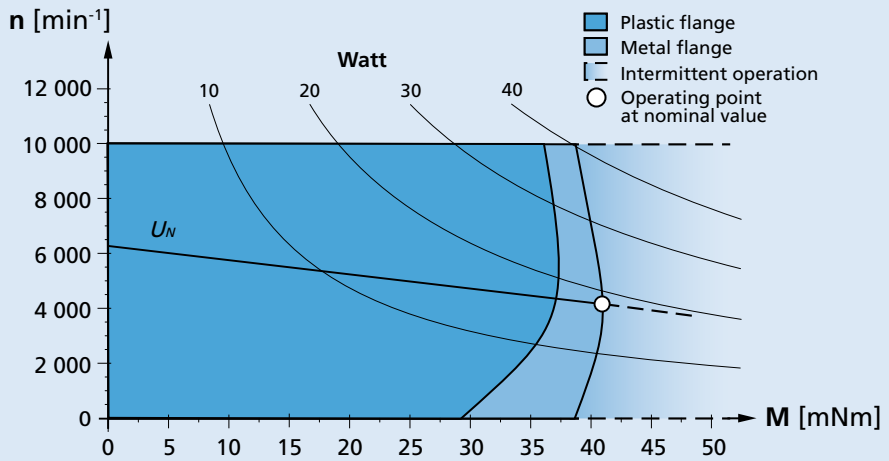

Recommended operation areas (example: nominal voltage 24V)

© DR. FRITZ FAULHABER GMBH & CO. KG
Specifications subject to change without notice.

Dimensional drawing

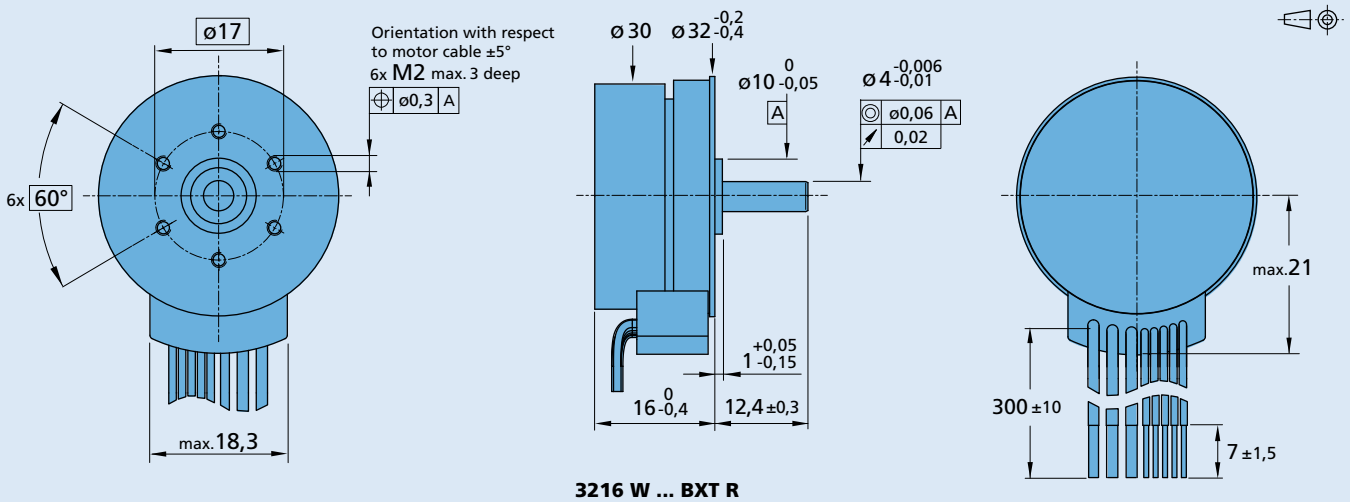

3216 W ... BXT R

Option, cable and connection information

Example product designation: **3216W012BXTR-3830**

Option	Type	Description
3830	Connector	Standard cable with connector MOLEX Microfit 3.0, 43025-0800, recommended mating connector 43020-0800

Connection

No.	Function	Colour
1	Phase C	yellow
2	Phase B	orange
3	Phase A	brown
4	GND	black
5	U_{DD} (+5V)	red
6	Hall sensor C	grey
7	Hall sensor B	blue
8	Hall sensor A	green

Standard cable

Single wires, material PVC,
AWG 20, Phase A/B/C
AWG 26, Hall A/B/C, U_{DD}, GND

Product combination

Precision Gearheads / Lead Screws	Encoders	Drive Electronics	Cables / Accessories
22GPT 26A 26/1R 32GPT 32/3R 22L ... ML 22L ... PB 22L ... SB 32L ... ML 32L ... PB 32L ... SB 32L ... TL		SC 2402 P SC 2804 S	To view our large range of accessory parts, please refer to the "Accessories" chapter.

© DR. FRITZ FAULHABER GMBH & CO. KG
Specifications subject to change without notice.

Brushless DC-Flat Motors

38 mNm

External rotor technology, with housing

20 W

Series 3216 ... BXT H

Values at 22°C and nominal voltage		3216 W	009 BXT H	012 BXT H	024 BXT H	
1 Nominal voltage	U_N		9	12	24	V
2 Terminal resistance, phase-phase	R		0,55	0,88	3,26	Ω
3 Efficiency, max.	$\eta_{max.}$		83	84	81	%
4 No-load speed	n_0		6 060	6 230	6 250	min^{-1}
5 No-load current, typ. (with shaft ø 4 mm)	I_0		0,165	0,126	0,068	A
6 Starting torque	M_A		225	245	263	mNm
7 Speed constant	k_n		691	530	267	min^{-1}/V
8 Back-EMF constant	k_E		1,45	1,89	3,75	mV/min^{-1}
9 Torque constant	k_M		13,8	18	35,8	mNm/A
10 Current constant	k_I		0,0724	0,0555	0,0279	A/mNm
11 Slope of n-M curve	$\Delta n/\Delta M$		27,5	25,9	24,3	min^{-1}/mNm
12 Terminal inductance, phase-phase	L		191	331	1 290	µH
13 Mechanical time constant	τ_m		5,28	4,97	4,66	ms
14 Rotor inertia	J		18,3	18,3	18,3	gcm^2
15 Angular acceleration	$\alpha_{max.}$		123	134	144	$\cdot 10^3 rad/s^2$
16 Operating temperature range:						
– motor		-40 ... +100				°C
– winding, max. permissible		+125				°C
17 Shaft bearings		ball bearings, preloaded				
18 Shaft load max.:						
– with shaft diameter		4				mm
– radial at 3 000 min^{-1} (5 mm from mounting flange)		15				N
– axial at 3 000 min^{-1} (push / pull)		3				N
– axial at standstill (push / pull)		50				N
19 Shaft play:						
– radial	≤	0,015				mm
– axial	=	0				mm
20 Mass		65,3				g
21 Direction of rotation		electronically reversible				
22 Speed up to	$n_{max.}$	10 000				min^{-1}
23 Number of pole pairs		7				
24 Hall sensors		digital				
25 Magnet material		NdFeB				

Rated values for continuous operation						
26 Rated torque	M_N		37	38	38	mNm
27 Rated current (thermal limit)	I_N		2,76	2,18	1,1	A
28 Rated speed	n_N		3 400	3 860	4 320	min^{-1}
29 Rated slope of n-M curve	$\Delta n/\Delta M$		71,9	62,4	50,8	min^{-1}/mNm

Note: Rated values are measured at nominal voltage and 22°C ambient temperature.

Note:

The display shows the range of possible operation points of the drives at a given ambient temperature of 22°C.

The diagram indicates the recommended speed in relation to the available torque at the output shaft.
It includes the assembly on a plastic- as well as on a metal flange (assembly method: IM B 5).

The nominal voltage linear slope describes the maximal achievable operating points at nominal voltage.
Any points of operation above this linear slope will require a supply voltage $U_{mot} > U_N$.

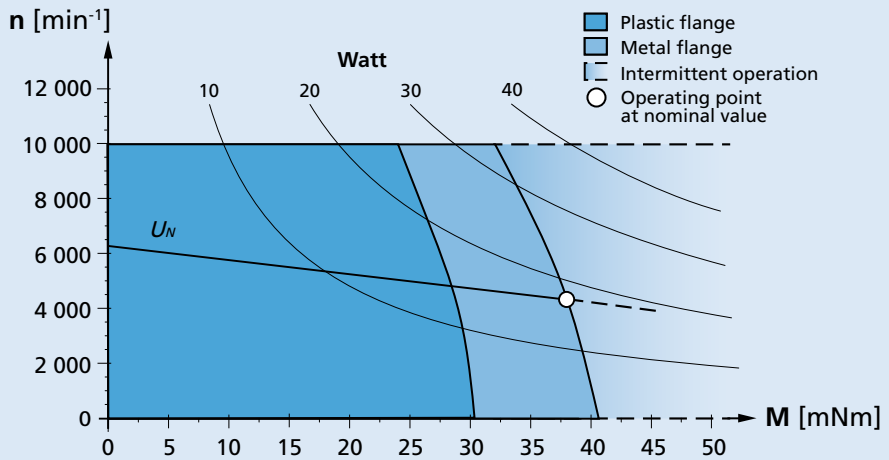

Recommended operation areas (example: nominal voltage 24V)

© DR. FRITZ FAULHABER GMBH & CO. KG
Specifications subject to change without notice.

Dimensional drawing

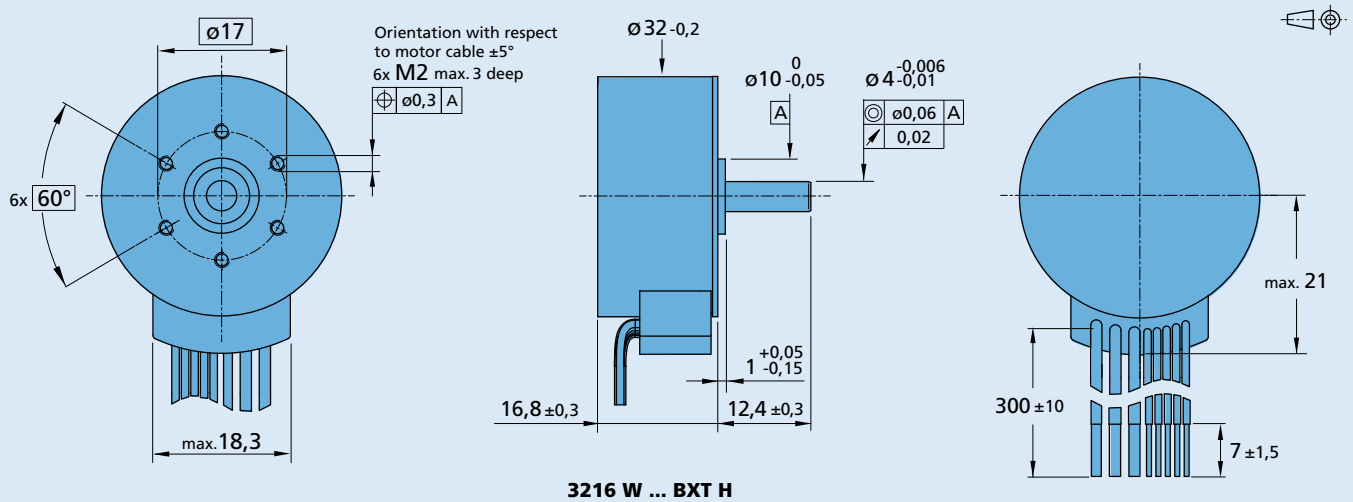

3216 W ... BXT H

Option, cable and connection information

Example product designation: **3216W012BXTH-3830**

Option	Type	Description
3830	Connector	Standard cable with connector MOLEX Microfit 3.0, 43025-0800, recommended mating connector 43020-0800

Connection

No.	Function	Colour
1	Phase C	yellow
2	Phase B	orange
3	Phase A	brown
4	GND	black
5	U_{DD} (+5V)	red
6	Hall sensor C	grey
7	Hall sensor B	blue
8	Hall sensor A	green

Standard cable

Single wires, material PVC,
AWG 20, Phase A/B/C
AWG 26, Hall A/B/C, U_{DD}, GND

Product combination

Precision Gearheads / Lead Screws	Encoders	Drive Electronics	Cables / Accessories
22GPT	IE3-1024	SC 2402 P	PMB32
26A	IE3-1024 L	SC 2804 S	
26/1R	IEF3-4096	MC 3603 S	To view our large range of accessory parts, please refer to the “Accessories” chapter.
32GPT	IEF3-4096 L	MC 5004 P	
32/3R	IERS3-500	MC 5005 S	
22L ... ML	IERS3-500 L		
22L ... SB	IER3-10000		
22L ... PB	IER3-10000 L		
32L ... TL			
32L ... ML			
32L ... SB			
32L ... PB			

© DR. FRITZ FAULHABER GMBH & CO. KG
Specifications subject to change without notice.

Brushless DC-Flat Motors

134 mNm

External rotor technology, without housing

100 W

Series 4221 ... BXT R

Values at 22°C and nominal voltage		4221 G	018 BXT R	024 BXT R	048 BXT R	
1 Nominal voltage	U_N		18	24	48	V
2 Terminal resistance, phase-phase	R		0,46	0,74	2,6	Ω
3 Efficiency, max.	$\eta_{max.}$		88	87	88	%
4 No-load speed	n_0		5 670	5 960	6 070	min^{-1}
5 No-load current, typ. (with shaft ø 5 mm)	I_0		0,181	0,186	0,074	A
6 Starting torque	M_A		1 170	1 220	1 390	mNm
7 Speed constant	k_n		320	253	127	min^{-1}/V
8 Back-EMF constant	k_E		3,13	3,95	7,87	mV/min^{-1}
9 Torque constant	k_M		29,8	37,7	75,2	mNm/A
10 Current constant	k_I		0,0335	0,0265	0,0133	A/mNm
11 Slope of n-M curve	$\Delta n/\Delta M$		4,93	4,97	4,4	min^{-1}/mNm
12 Terminal inductance, phase-phase	L		396	664	2 550	µH
13 Mechanical time constant	τ_m		3,56	3,59	3,18	ms
14 Rotor inertia	J		69	69	69	gcm^2
15 Angular acceleration	$\alpha_{max.}$		169	177	201	$\cdot 10^3 rad/s^2$
16 Operating temperature range:						
– motor		-40 ... +100				°C
– winding, max. permissible		+125				°C
17 Shaft bearings		ball bearings, preloaded				
18 Shaft load max.:						
– with shaft diameter		5				mm
– radial at 3 000 min^{-1} (5 mm from mounting flange)		25				N
– axial at 3 000 min^{-1} (push / pull)		4				N
– axial at standstill (push / pull)		50				N
19 Shaft play:						
– radial	≤	0,015				mm
– axial	=	0				mm
20 Mass		127				g
21 Direction of rotation		electronically reversible				
22 Speed up to	$n_{max.}$	10 000				min^{-1}
23 Number of pole pairs		7				
24 Hall sensors		digital				
25 Magnet material		NdFeB				

Rated values for continuous operation						
26 Rated torque	M_N		122	127	134	mNm
27 Rated current (thermal limit)	I_N		3,6	3,17	1,66	A
28 Rated speed	n_N		3 690	4 180	4 390	min^{-1}
29 Rated slope of n-M curve	$\Delta n/\Delta M$		16,3	14	12,5	min^{-1}/mNm

Note: Rated values are measured at nominal voltage and 22°C ambient temperature.

Note:

The display shows the range of possible operation points of the drives at a given ambient temperature of 22°C.

The diagram indicates the recommended speed in relation to the available torque at the output shaft.
It includes the assembly on a plastic- as well as on a metal flange (assembly method: IM B 5).

The nominal voltage linear slope describes the maximal achievable operating points at nominal voltage.
Any points of operation above this linear slope will require a supply voltage $U_{mot} > U_N$.

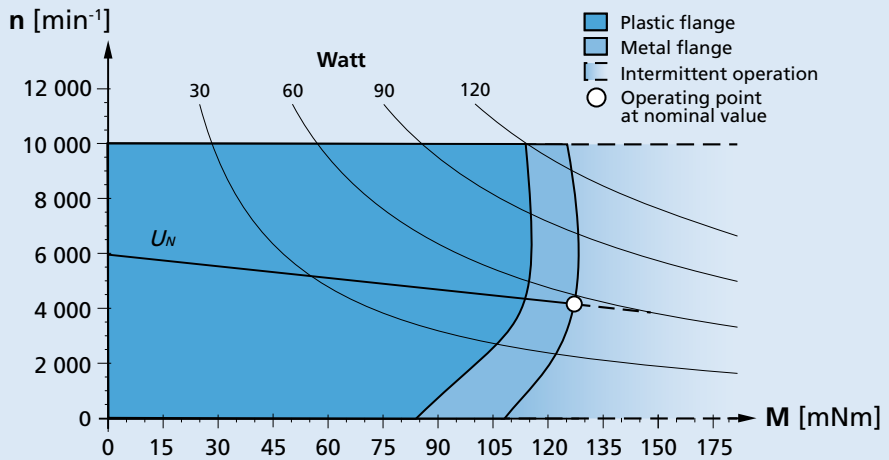

Recommended operation areas (example: nominal voltage 24V)

For notes on technical data and lifetime performance refer to "Technical Information".

Edition 2021 Feb. 03

Backwards

© DR. FRITZ FAULHABER GMBH & CO. KG
Specifications subject to change without notice.

Dimensional drawing

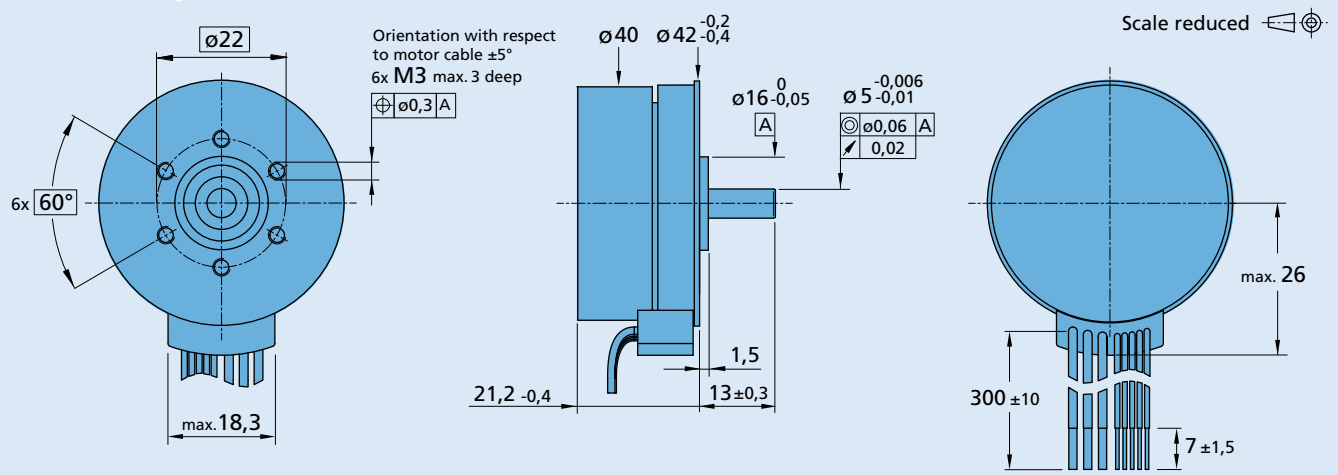

4221 G ... BXT R

Option, cable and connection information

Example product designation: **4221G018BXTR-3830**

Option	Type	Description
3830	Connector	Standard cable with connector MOLEX Microfit 3.0, 43025-0800, recommended mating connector 43020-0800

Connection

No.	Function	Colour
1	Phase C	yellow
2	Phase B	orange
3	Phase A	brown
4	GND	black
5	U_{DD} (+5V)	red
6	Hall sensor C	grey
7	Hall sensor B	blue
8	Hall sensor A	green

Standard cable

Single wires, material PVC,
AWG 20, Phase A/B/C
AWG 26, Hall A/B/C, U_{DD}, GND

Product combination

Precision Gearheads / Lead Screws	Encoders	Drive Electronics	Cables / Accessories
38/1 38/1 S 38/2 38/2 S 42GPT		SC 2804 S SC 5004 P SC 5008 S	To view our large range of accessory parts, please refer to the "Accessories" chapter.

© DR. FRITZ FAULHABER GMBH & CO. KG
Specifications subject to change without notice.

Brushless DC-Flat Motors 112 mNm

External rotor technology, with housing 60 W

Series 4221 ... BXT H

Values at 22°C and nominal voltage		4221 G	018 BXT H	024 BXT H	048 BXT H	
1 Nominal voltage	U_N		18	24	48	V
2 Terminal resistance, phase-phase	R		0,46	0,74	2,6	Ω
3 Efficiency, max.	$\eta_{max.}$		88	87	88	%
4 No-load speed	n_0		5 710	6 040	6 070	min^{-1}
5 No-load current, typ. (with shaft ø 5 mm)	I_0		0,177	0,139	0,103	A
6 Starting torque	M_A		1 170	1 220	1 390	mNm
7 Speed constant	k_n		320	253	127	min^{-1}/V
8 Back-EMF constant	k_E		3,13	3,95	7,87	mV/min^{-1}
9 Torque constant	k_M		29,8	37,7	75,2	mNm/A
10 Current constant	k_I		0,0335	0,0265	0,0133	A/mNm
11 Slope of n-M curve	$\Delta n/\Delta M$		4,93	4,97	4,4	min^{-1}/mNm
12 Terminal inductance, phase-phase	L		396	664	2 550	µH
13 Mechanical time constant	τ_m		3,56	3,59	3,18	ms
14 Rotor inertia	J		69	69	69	gcm^2
15 Angular acceleration	$\alpha_{max.}$		169	177	201	$\cdot 10^3 rad/s^2$
16 Operating temperature range:						
– motor		-40 ... +100				°C
– winding, max. permissible		+125				°C
17 Shaft bearings		ball bearings, preloaded				
18 Shaft load max.:						
– with shaft diameter		5				mm
– radial at 3 000 min^{-1} (5 mm from mounting flange)		25				N
– axial at 3 000 min^{-1} (push / pull)		4				N
– axial at standstill (push / pull)		50				N
19 Shaft play:						
– radial	≤	0,015				mm
– axial	=	0				mm
20 Mass		142				g
21 Direction of rotation		electronically reversible				
22 Speed up to	$n_{max.}$	10 000				min^{-1}
23 Number of pole pairs		7				
24 Hall sensors		digital				
25 Magnet material		NdFeB				
Rated values for continuous operation						
26 Rated torque	M_N		102	112	107	mNm
27 Rated current (thermal limit)	I_N		3,33	2,87	1,39	A
28 Rated speed	n_N		3 980	4 380	4 700	min^{-1}
29 Rated slope of n-M curve	$\Delta n/\Delta M$		17	14,8	12,8	min^{-1}/mNm

Note: Rated values are measured at nominal voltage and 22°C ambient temperature.

Note:
The display shows the range of possible operation points of the drives at a given ambient temperature of 22°C.

The diagram indicates the recommended speed in relation to the available torque at the output shaft.
It includes the assembly on a plastic- as well as on a metal flange (assembly method: IM B 5).

The nominal voltage linear slope describes the maximal achievable operating points at nominal voltage.
Any points of operation above this linear slope will require a supply voltage $U_{mot} > U_N$.

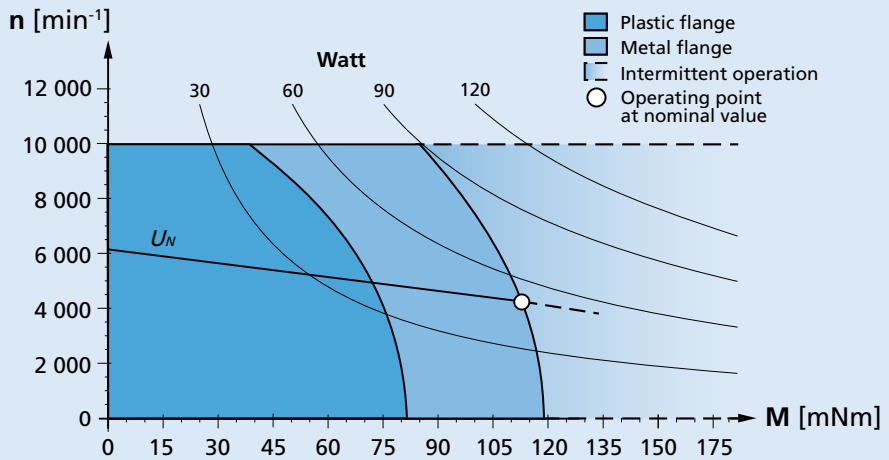

Recommended operation areas (example: nominal voltage 24V)

© DR. FRITZ FAULHABER GMBH & CO. KG
Specifications subject to change without notice.

Dimensional drawing

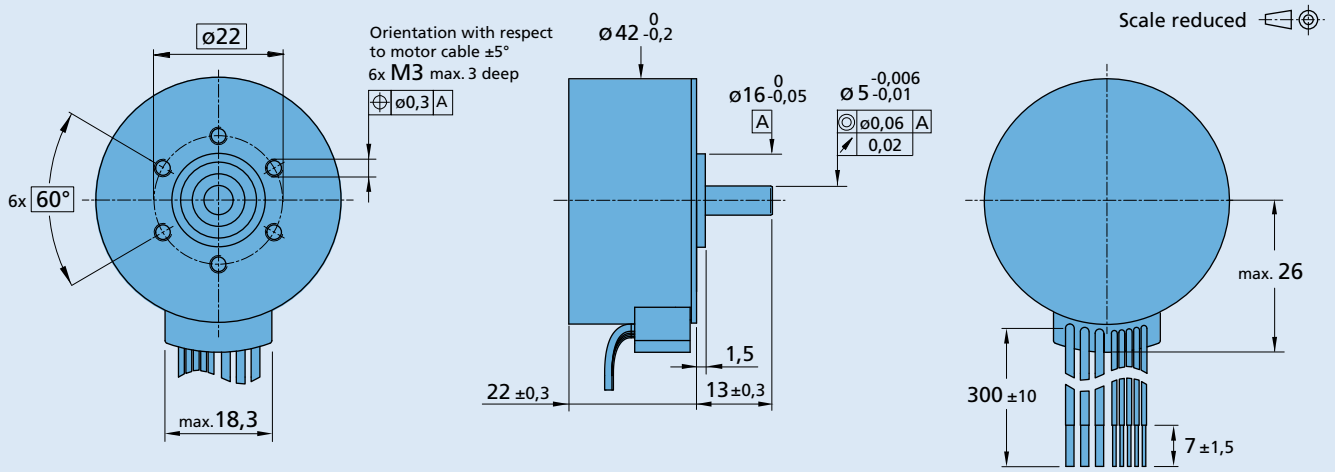

4221 G ... BXT H

Option, cable and connection information

Example product designation: **4221G018BXTH-3830**

Option	Type	Description
3830		Standard cable with connector MOLEX Microfit 3.0, 43025-0800, recommended mating connector 43020-0800

Connection

No.	Function	Colour
1	Phase C	yellow
2	Phase B	orange
3	Phase A	brown
4	GND	black
5	U_{DD} (+5V)	red
6	Hall sensor C	grey
7	Hall sensor B	blue
8	Hall sensor A	green

Standard cable

Single wires, material PVC,
AWG 20, Phase A/B/C
AWG 26, Hall A/B/C, U_{DD}, GND

Product combination

Precision Gearheads / Lead Screws	Encoders	Drive Electronics	Cables / Accessories
38/1 38/1 S 38/2 38/2 S 42GPT	IE3-1024 IE3-1024 L IEF3-4096 IEF3-4096 L IERS3-500 IERS3-500 L IER3-10000 IER3-10000 L	SC 2804 S SC 5004 P SC 5008 S MC 3603 S MC 5004 P MC 5005 S	PMB32 To view our large range of accessory parts, please refer to the “Accessories” chapter.

© DR. FRITZ FAULHABER GMBH & CO. KG
Specifications subject to change without notice.

FAULHABER BRC

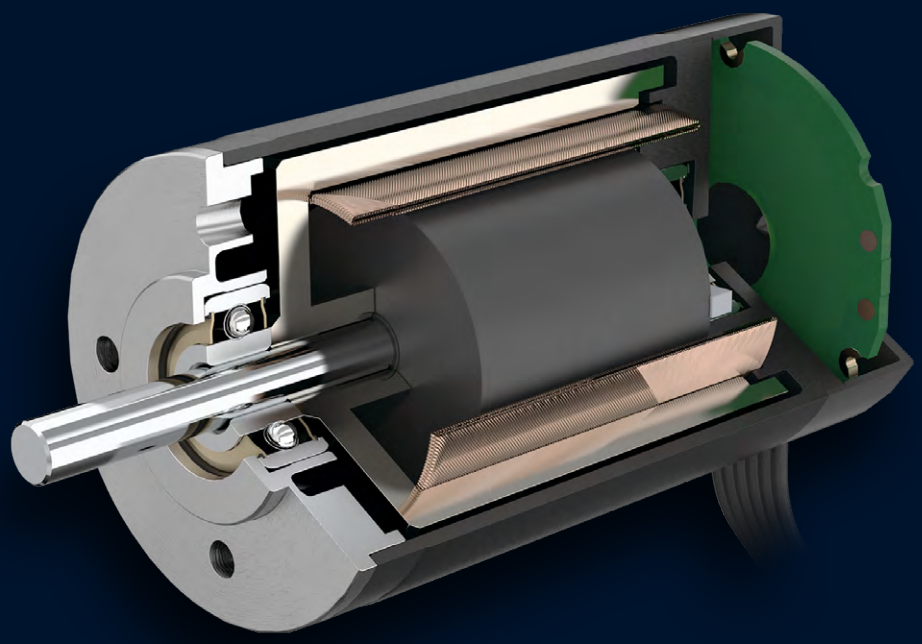

FAULHABER BRC

1525...BRC	with integrated Speed Controller	1.9 mNm
1935...BRC	with integrated Speed Controller	4.4 mNm
3153...BRC	with integrated Speed Controller	36.5 mNm

Backwards

Brushless DC-Servomotors 1,9 mNm

with integrated Speed Controller 4,4 W

1525 ... BRC

Values at 22°C and nominal voltage	1525 U		009 BRC	012 BRC	015 BRC	
Power supply electronic	U_P		4 ... 18	4 ... 18	4 ... 18	V DC
Power supply motor	U_{mot}		1,7 ... 18	1,7 ... 18	1,7 ... 18	V DC
Nominal voltage for motor	U_N		9	12	15	V
No-load speed (at U_N)	n_0		16 800	16 300	15 600	min⁻¹
Torque constant	k_M		4,9	6,7	8,7	mNm/A
Starting torque	M_A		3,9	4,1	4,1	mNm
Standby current for electronic (at U_N)	I_{el}		0,025	0,025	0,025	A
Speed range (up to 2xU_N, max, 18V)			1 000 ... 25 000	1 000 ... 25 000	1 000 ... 18 900	min⁻¹
Shaft bearings		ball bearings, preloaded				
Shaft load max.:						
– with shaft diameter		2				mm
– radial at 3 000 min⁻¹ (3 mm from mounting flange)		8				N
– axial at 3 000 min⁻¹ (push / pull)		0,8				N
– axial at standstill (push / pull)		10				N
Shaft play:						
– radial		≤ 0,015				mm
– axial		= 0				mm
Operating temperature range		-25 ... +85				°C
Housing material		mounting face in aluminium, housing in plastic				
Mass		16				g

Rated values for continuous operation						
Rated torque	M_N		1,9	1,9	1,9	mNm
Rated current (thermal limit)	I_N		0,58	0,45	0,36	A
Rated speed	n_N		6 140	6 780	6 560	min⁻¹

Interface / range of functions	... BRC
Configuration from Motion Manager 5.0	via USB Programming Adapter
Operating modes	Integrated speed control via PI controller. Setpoint Input via analog voltage input. Can optionally be operated as a voltage controller or in fixed speed mode.
Speed range	Sensorless operation, from 1000 min⁻¹
Additional functions	Digital input as switching input for defining the direction of rotation of the motor Digital output as frequency output. Integrated current limitation to protect against thermal overload.

Note:

The display shows the range of possible operation points of the drives at a given ambient temperature of 22°C.

The diagram indicates the recommended speed in relation to the available torque at the output shaft.
It includes the assembly on a plastic- as well as on a metal flange (assembly method: IM B 5).

The nominal voltage linear slope describes the maximal achievable operating points at nominal voltage.
Any points of operation above this linear slope will require a supply voltage $U_{mot} > U_N$.

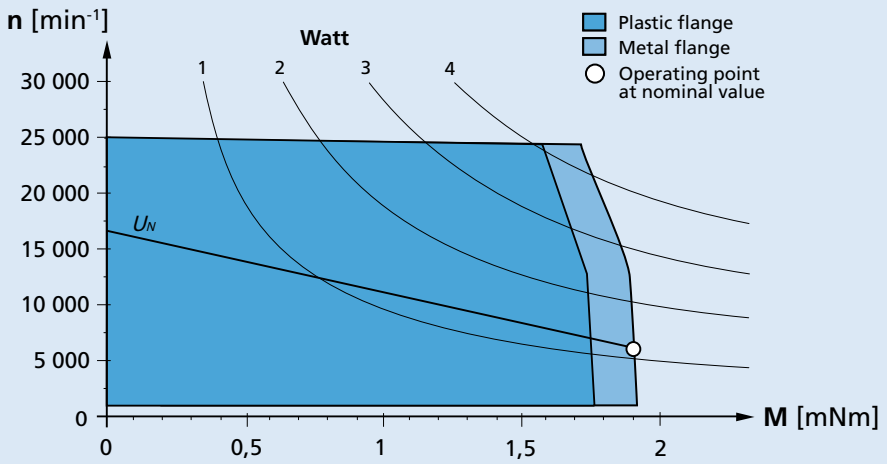

Recommended operation areas (example: nominal voltage 9V)

For notes on technical data and lifetime performance refer to "Technical Information".

Backwards

© DR. FRITZ FAULHABER GMBH & CO. KG
Specifications subject to change without notice.

Dimensional drawing

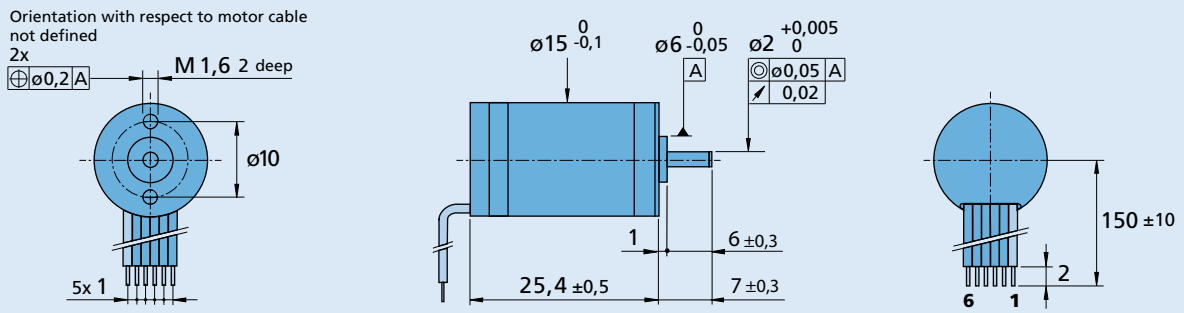

1525 U ... BRC

Option, cable and connection information

Example product designation: **1525U012BRC**

Option	Type	Description

Connection

Name	Function	Inputs-outputs	Description
1 (red)	*Up*	electronic supply	4 V DC - 18 V DC
2	*Umot*	motor supply	1,7 V DC - 2x *UN* (max. 18V)
3	GND	ground	
4	*Unsoll*	Speed command	0 - 10 V DC | > 10 V DC - max. *UP* not defined
5	DIR	direction of rotation	on ground or U < 0,5 V = CCW, *U* > 3 V = CW
6	FG	frequency output	(max. *Up*, I max. 15 mA) 3 lines per revolution

Caution: Incorrect lead connection will damage the motor electronics!

Standard cable
PVC ribbon cable 6 x AWG 28

Note: For details on the connection assignment, see device manual

Product combination

Precision Gearheads / Lead Screws	Encoders	Drive Electronics	Cables / Accessories
		Integrated	To view our large range of accessory parts, please refer to the "Accessories" chapter.

© DR. FRITZ FAULHABER GMBH & CO. KG
Specifications subject to change without notice.

Brushless DC-Servomotors
with integrated Speed Controller

4,4 mNm
4,8 W

1935 ... BRC

Values at 22°C and nominal voltage	1935 S		006 BRC	009 BRC	012 BRC	
Power supply electronic	U_P		4 ... 18	4 ... 18	4 ... 18	V DC
Power supply motor	U_{mot}		1,7 ... 18	1,7 ... 18	1,7 ... 18	V DC
Nominal voltage for motor	U_N		6	9	12	V
No-load speed (at U_N)	n_0		8 600	8 600	8 100	min⁻¹
Torque constant	k_M		6,48	9,92	13,97	mNm/A
Starting torque	M_A		4	4	4	mNm
Standby current for electronic (at U_N)	I_{el}		0,025	0,025	0,025	A
Speed range (up to 2xU_N, max, 18V)			1 000 ... 17 400	1 000 ... 17 500	1 000 ... 12 300	min⁻¹
Shaft bearings		ball bearings, preloaded				
Shaft load max.:						
– with shaft diameter		3				mm
– radial at 3 000 min⁻¹ (3 mm from mounting flange)		10				N
– axial at 3 000 min⁻¹ (push / pull)		1				N
– axial at standstill (push / pull)		25				N
Shaft play:						
– radial		≤ 0,015				mm
– axial		= 0				mm
Operating temperature range		-25 ... +85				°C
Housing material		mounting face in aluminium, housing in plastic				
Mass		31				g

Rated values for continuous operation						
Rated torque	M_N		3,3	3,6	3,1	mNm
Rated current (thermal limit)	I_N		0,63	0,5	0,34	A
Rated speed	n_N		2 500	2 500	2 500	min⁻¹

Interface / range of functions	... BRC
Configuration from Motion Manager 5.0	via USB Programming Adapter
Operating modes	Integrated speed control via PI controller. Setpoint Input via analog voltage input. Can optionally be operated as a voltage controller or in fixed speed mode.
Speed range	Sensorless operation, from 1000 min⁻¹
Additional functions	Digital input as switching input for defining the direction of rotation of the motor Digital output as frequency output. Integrated current limitation to protect against thermal overload.

Note:
The display shows the range of possible operation points of the drives at a given ambient temperature of 22°C.

The diagram indicates the recommended speed in relation to the available torque at the output shaft.
It includes the assembly on a plastic- as well as on a metal flange (assembly method: IM B 5).

The nominal voltage linear slope describes the maximal achievable operating points at nominal voltage.
Any points of operation above this linear slope will require a supply voltage $U_{mot} > U_N$.

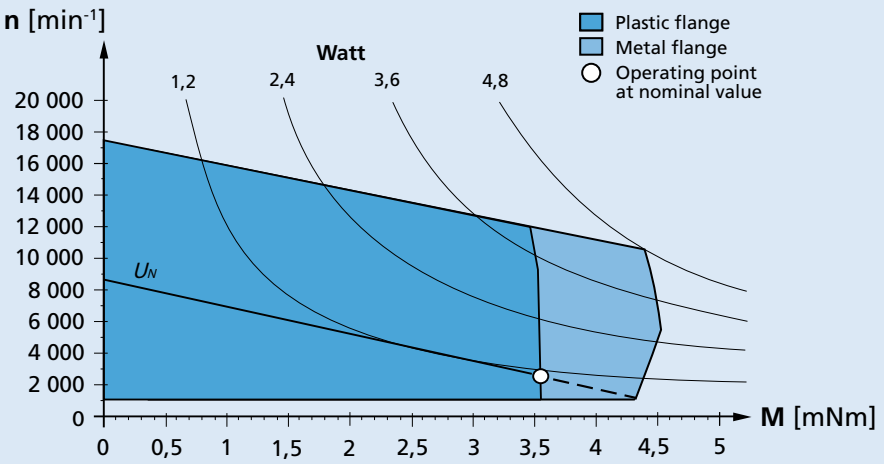

Recommended operation areas (example: nominal voltage 9V)

For notes on technical data and lifetime performance refer to "Technical Information".

Backwards

© DR. FRITZ FAULHABER GMBH & CO. KG
Specifications subject to change without notice.

Dimensional drawing

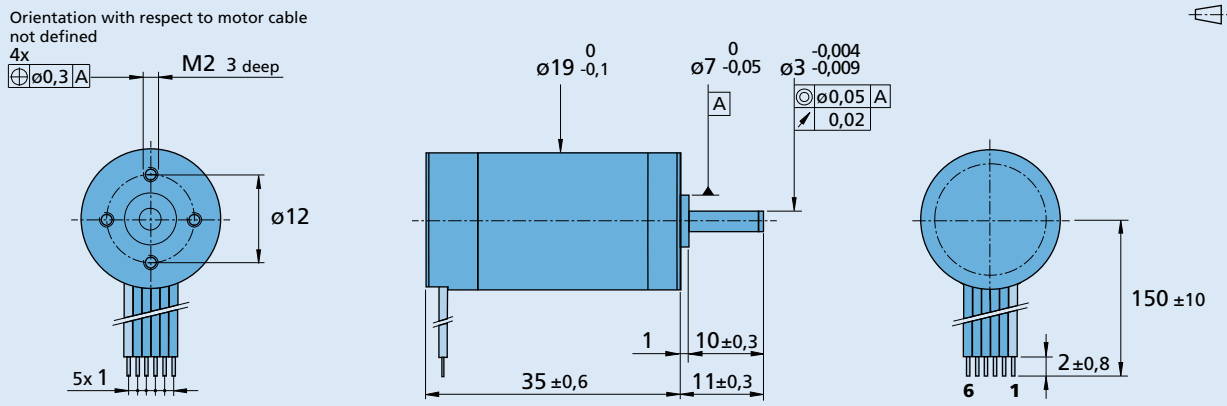

1935 S ... BRC

Option, cable and connection information

Example product designation: **1935S012BRC-5809**

Option	Type	Description
5809	Single Leads	single leads, length 150 mm, red (+) / black (-)
5929	Shaft load	axial shaft load at standstill up to 150 N

Connection

Name	Function	Inputs-outputs	Description
1 (red)	*Up*	electronic supply	4 V DC - 18 V DC
2	*Umot*	motor supply	1,7 V DC - 2x U_N (max. 18V)
3	GND	ground	
4	*Unsoll*	Speed command	0 - 10 V DC | > 10 V DC - max. *UP* not defined
5	DIR	direction of rotation	on ground or U < 0,5 V = CCW, *U* > 3 V = CW
6	FG	frequency output	(max. *Up*, I max. 15 mA) 3 lines per revolution

Caution: Incorrect lead connection will damage the motor electronics!

Standard cable
PVC ribbon cable 6 x AWG 28

Note: For details on the connection assignment, see device manual

Product combination

Precision Gearheads / Lead Screws	Encoders	Drive Electronics	Cables / Accessories
		Integrated	To view our large range of accessory parts, please refer to the "Accessories" chapter.

© DR. FRITZ FAULHABER GMBH & CO. KG
Specifications subject to change without notice.

Brushless DC-Servomotors
with integrated Speed Controller

36,5 mNm
17,5 W

3153 ... BRC

Values at 22°C and nominal voltage	3153 K		009 BRC	012 BRC	024 BRC	
Power supply electronic	U_P		5 ... 30	5 ... 30	5 ... 30	V DC
Power supply motor	U_{mot}		0 ... 18	0 ... 24	0 ... 30	V DC
Nominal voltage for motor	U_N		9	12	24	V
No-load speed (at U_N)	n_0		5 200	5 100	5 200	min⁻¹
Torque constant	k_M		16,22	21,8	43,59	mNm/A
Starting torque	M_A		42	50	50	mNm
Standby current for electronic (at U_N)	I_{el}		0,025	0,025	0,025	A
Speed range (up to 2xU_N, max, 30V)			1 000 ... 10 500	1 000 ... 10 500	1 000 ... 6 500	min⁻¹
Shaft bearings		ball bearings, preloaded				
Shaft load max.:						
– with shaft diameter		4				mm
– radial at 3 000 min⁻¹ (3 mm from mounting flange)		30				N
– axial at 3 000 min⁻¹ (push / pull)		5				N
– axial at standstill (push / pull)		50				N
Shaft play:						
– radial		≤ 0,015				mm
– axial		= 0				mm
Operating temperature range		-25 ... +85				°C
Housing material		mounting face in aluminium, housing in plastic				
Mass		155				g

Rated values for continuous operation						
Rated torque	M_N		34,5	33,5	36,5	mNm
Rated current (thermal limit)	I_N		2,4	1,73	0,99	A
Rated speed	n_N		2 500	2 900	3 200	min⁻¹

Interface / range of functions	... BRC
Configuration from Motion Manager 5.0	via USB Programming Adapter
Operating modes	Integrated speed control via PI controller. Setpoint Input via analog voltage input. Can optionally be operated as a voltage controller or in fixed speed mode.
Speed range	Sensorless operation, from 1000 min⁻¹
Additional functions	Digital input as switching input for defining the direction of rotation of the motor Digital output as frequency output. Integrated current limitation to protect against thermal overload.

Note:
The display shows the range of possible operation points of the drives at a given ambient temperature of 22°C.

The diagram indicates the recommended speed in relation to the available torque at the output shaft.
It includes the assembly on a plastic- as well as on a metal flange (assembly method: IM B 5).

The nominal voltage linear slope describes the maximal achievable operating points at nominal voltage.
Any points of operation above this linear slope will require a supply voltage $U_{mot} > U_N$.

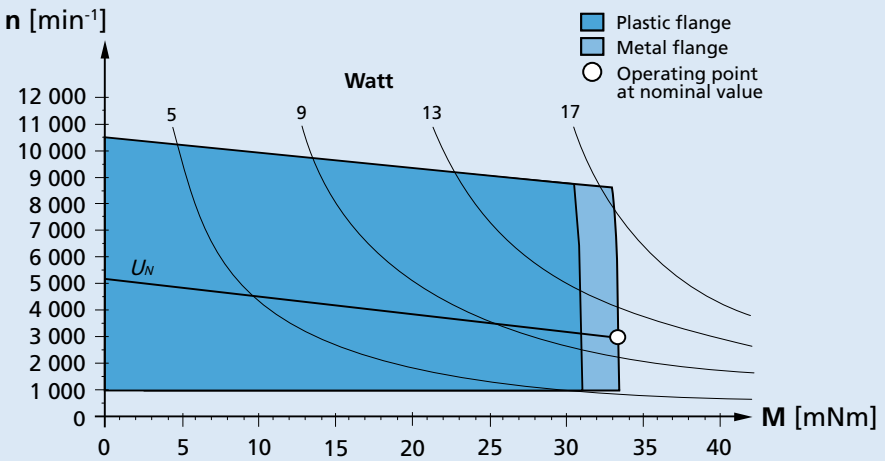

Recommended operation areas (example: nominal voltage 12V)

© DR. FRITZ FAULHABER GMBH & CO. KG
Specifications subject to change without notice.
www.faulhaber.com

Dimensional drawing

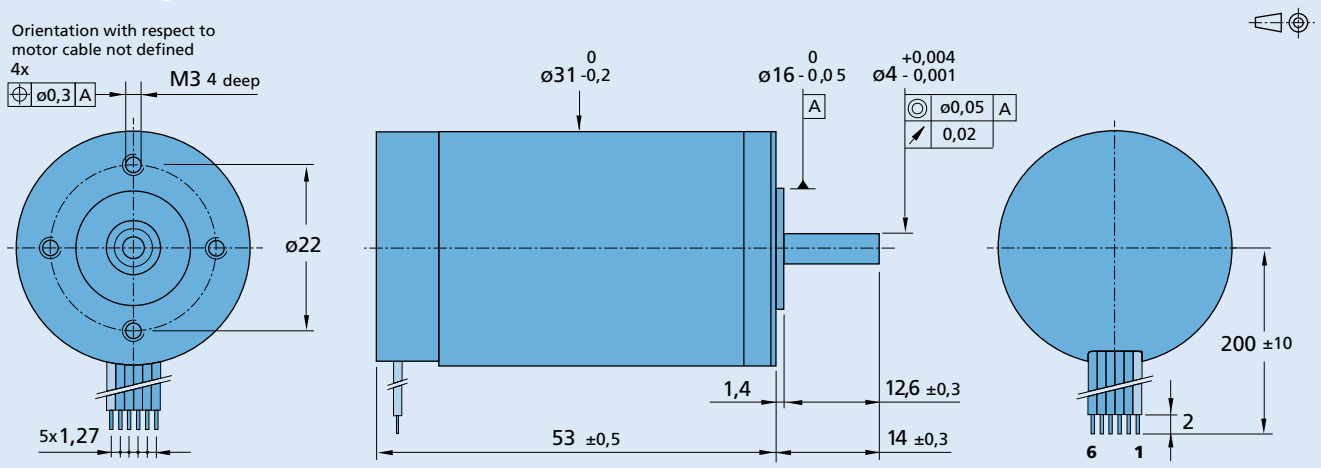

3153 K ... BRC

Option, cable and connection information

Example product designation: **3153K024BRC**

Option	Type	Description

Connection

Name	Function	Inputs-outputs	Description
1 (red)	*Up*	electronic supply	5 V DC - 30 V DC
2	*Umot*	motor supply	0 V DC - 2x U_N (max. 30V)
3	GND	ground	
4	*Unsoll*	Speed command	0 - 10 V DC | > 10 V DC - max. *UP* not defined
5	DIR	direction of rotation	on ground or U < 0,5 V = CCW, *U* > 3 V = CW
6	FG	frequency output	(max. *Up*, I max. 15 mA) 3 lines per revolution

Caution: Incorrect lead connection will damage the motor electronics!

Standard cable
PVC ribbon cable 6 x AWG 26

Note: For details on the connection assignment, see device manual

Product combination

Precision Gearheads / Lead Screws	Encoders	Drive Electronics	Cables / Accessories
		Integrated	To view our large range of accessory parts, please refer to the "Accessories" chapter.

© DR. FRITZ FAULHABER GMBH & CO. KG
Specifications subject to change without notice.

FAULHABER BX4 SC

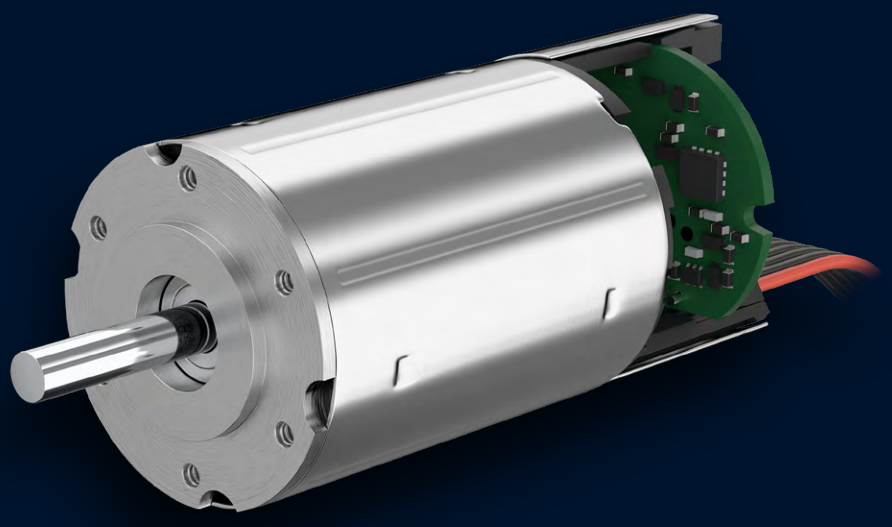

FAULHABER BX4 SC

2232...BX4 SC	with integrated Speed Controller	17.5 mNm
2250...BX4 SC	with integrated Speed Controller	25 mNm
3242...BX4 SC	with integrated Speed Controller	60 mNm
3242...BX4 SCDC	with integrated Speed Controller	45 mNm
3268...BX4 SC	with integrated Speed Controller	99 mNm
3268...BX4 SCDC	with integrated Speed Controller	60 mNm

Backwards

Brushless DC-Servomotors

17,5 mNm

with integrated Speed Controller

10,5 W

4 Pole Technology

2232 ... BX4 SC

Values at 22°C and nominal voltage	2232 S		012 BX4 SC	024 BX4 SC	
Power supply electronic	U_P		5 ... 28	5 ... 28	V DC
Power supply motor	U_{mot}		6 ... 28	6 ... 28	V DC
Nominal voltage for motor	U_N		12	24	V
No-load speed (at U_N)	n_0		7 000	7 100	min^{-1}
Peak torque (S2 operation for max. 1s/2s)	$M_{max.}$		34	35	mNm
Torque constant	k_M		16,5	31,4	mNm/A
PWM switching frequency	f_{PWM}		96	96	kHz
Efficiency electronic	η		95	95	%
Standby current for electronic (@ U_N)	I_{el}		0,02	0,02	A
Speed range (up to 24V / 28V)			400 ... 14 000	400 ... 8 500	min^{-1}
Shaft bearings		ball bearings, preloaded			
Shaft load max.:					
– with shaft diameter		3			mm
– radial at 3 000 min^{-1} (3 mm from mounting flange)		20			N
– axial at 3 000 min^{-1} (push / pull)		2			N
– axial at standstill (push / pull)		20			N
Shaft play:					
– radial		≤ 0,015			mm
– axial		= 0			mm
Operating temperature range		-40 ... +85			°C
Housing material		stainless steel			
Mass		77			g

Rated values for continuous operation					
Rated torque	M_N		17	17,5	mNm
Rated current (thermal limit)	I_N		1	0,57	A
Rated speed	n_N		4 100	4 700	min^{-1}

Interface / range of functions	... SC
Configuration from Motion Manager 5.0	via USB Programming Adapter
Operating modes	Integrated speed control via PI controller and external set value specification; commutation via digital Hall sensors (or optionally via analog Hall sensors). Can optionally be operated in voltage controller mode or fixed speed mode.
Speed range	Digital Hall = from 400 min^{-1}, analog Hall = from 50 min^{-1}
Additional functions	Integrated current limitating to protect against thermal overload. Intermittent operation (S2) with up to double the continuous current. Separate voltage supply for motor and electronics. Direction of rotation changeover through separate switching input; reading of speed signal via frequency output.

Note:

The display shows the range of possible operation points of the drives at a given ambient temperature of 22°C.

The diagram indicates the recommended speed in relation to the available torque at the output shaft.
It includes the assembly on a plastic- as well as on a metal flange (assembly method: IM B 5).

The nominal voltage linear slope describes the maximal achievable operating points at nominal voltage.
Any points of operation above this linear slope will require a supply voltage $U_{mot} > U_N$.

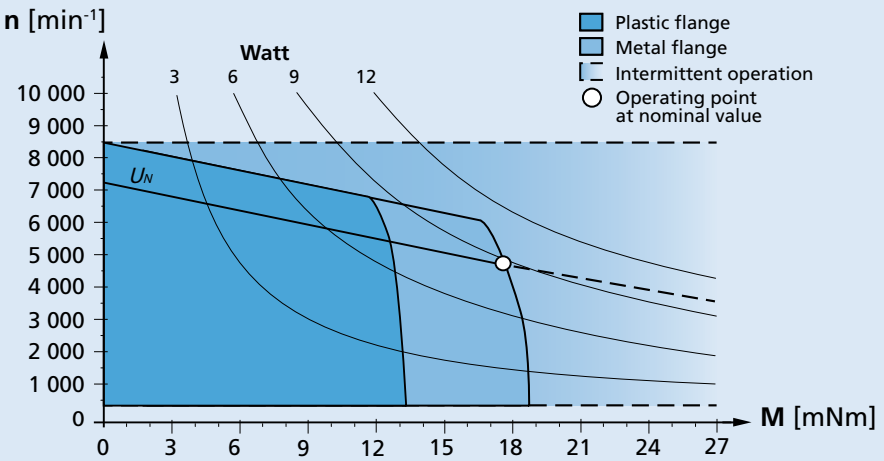

Recommended operation areas (example: nominal voltage 24V)

For notes on technical data and lifetime performance refer to "Technical Information".

© DR. FRITZ FAULHABER GMBH & CO. KG
Specifications subject to change without notice.

Dimensional drawing

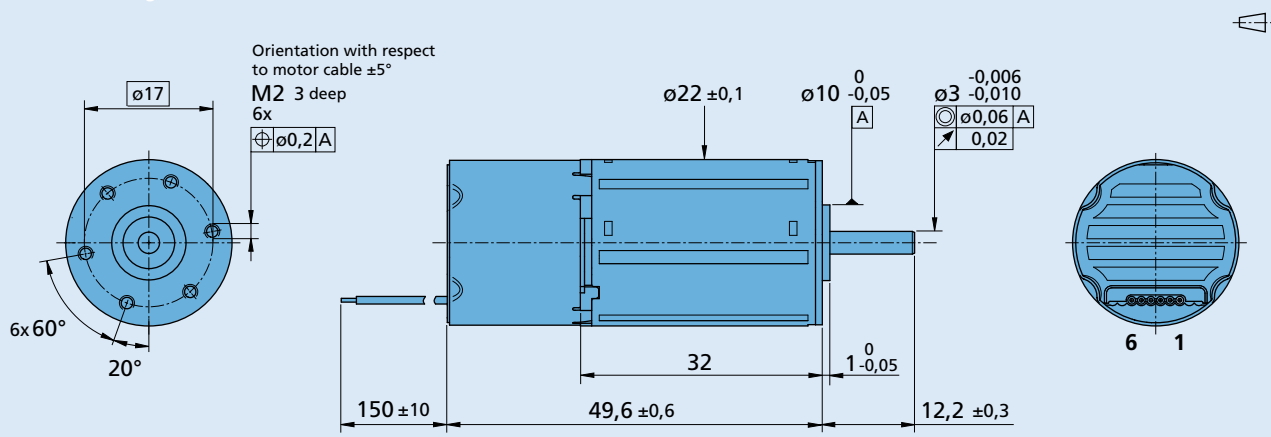

2232 S ... BX4 SC

Option, cable and connection information

Example product designation: **2232S024BX4SC-3692**

Option	Type	Description
3809	Connector	AWG 26 / PVC ribbon cable with connector MOLEX Microfit 3.0, 43025-0600, recommended mating connector 43020-0600
3692	Sensors	Analog Hall Sensors

Connection

Name	Function	Inputs-outputs	Description
1	*UP*	power supply electronic	5 ... 28 V DC
2	*Umot*	power supply motor	6 ... 28 V DC
3	GND	ground	
4	*Unsoll*	input voltage	*Uin* = 0 ... 10 V | > 10 V ... *UP* » set speed value not defined
		input resistance	*Rin* ≥ 8,9kΩ
		set speed value	per 1 V , 1 000 min^{-1}
			Uin < 0,15 V » motor stops
			Uin > 0,3 V » motor starts
5	DIR	direction of rotation	to ground or *U* < 0,5 V » counterclockwise
			U > 3 V » clockwise
		input resistance	*Rin* ≥ 10 kΩ
6	FG	frequency output	max. *UP*; *Imax* = 15 mA; open collector with 22 kΩ pull-up resistor
			6 lines per revolution

Standard cable
PVC ribbon cable 6 x AWG 26, 1,27 mm

Note: For details on the connection assignment, see device manual for the SCS.

Product combination

Precision Gearheads / Lead Screws	Encoders	Drive Electronics	Cables / Accessories
22GPT 22/7 26A 22L ... ML 22L ... PB 22L ... SB		Integrated	To view our large range of accessory parts, please refer to the "Accessories" chapter.

© DR. FRITZ FAULHABER GMBH & CO. KG
Specifications subject to change without notice.

Brushless DC-Servomotors

25 mNm

with integrated Speed Controller

14,6 W

4 Pole Technology

2250 ... BX4 SC

Values at 22°C and nominal voltage	2250 S		012BX4 SC	024BX4 SC	
Power supply electronic	U_P		5 ... 28	5 ... 28	V DC
Power supply motor	U_{mot}		6 ... 28	6 ... 28	V DC
Nominal voltage for motor	U_N		12	24	V
No-load speed (at U_N)	n_0		6 300	6 100	min⁻¹
Peak torque (S2 operation for max. 1s/2s)	$M_{max.}$		50	50	mNm
Torque constant	k_M		19	36,9	mNm/A
PWM switching frequency	f_{PWM}		96	96	kHz
Efficiency electronic	η		95	95	%
Standby current for electronic (@ U_N)	I_{el}		0,02	0,02	A
Speed range (up to 24V / 28V)			400 ... 12 300	400 ... 7 300	min⁻¹
Shaft bearings		ball bearings, preloaded			
Shaft load max.:					
– with shaft diameter		3			mm
– radial at 3 000 min⁻¹ (4 mm from mounting flange)		20			N
– axial at 3 000 min⁻¹ (push / pull)		2			N
– axial at standstill (push / pull)		20			N
Shaft play:					
– radial		≤ 0,015			mm
– axial		= 0			mm
Operating temperature range		-40 ... +85			°C
Housing material		stainless steel			
Mass		117			g

Rated values for continuous operation					
Rated torque	M_N		25	25	mNm
Rated current (thermal limit)	I_N		1,5	0,86	A
Rated speed	n_N		4 300	4 800	min⁻¹

Interface / range of functions	... SC
Configuration from Motion Manager 5.0	via USB Programming Adapter
Operating modes	Integrated speed control via PI controller and external set value specification; commutation via digital Hall sensors (or optionally via analog Hall sensors). Can optionally be operated in voltage controller mode or fixed speed mode.
Speed range	Digital Hall = from 400 min⁻¹, analog Hall = from 50 min⁻¹
Additional functions	Integrated current limitating to protect against thermal overload. Intermittent operation (S2) with up to double the continuous current. Separate voltage supply for motor and electronics. Direction of rotation changeover through separate switching input; reading of speed signal via frequency output.

Note:

The display shows the range of possible operation points of the drives at a given ambient temperature of 22°C.

The diagram indicates the recommended speed in relation to the available torque at the output shaft.
It includes the assembly on a plastic- as well as on a metal flange (assembly method: IM B 5).

The nominal voltage linear slope describes the maximal achievable operating points at nominal voltage.
Any points of operation above this linear slope will require a supply voltage $U_{mot} > U_N$.

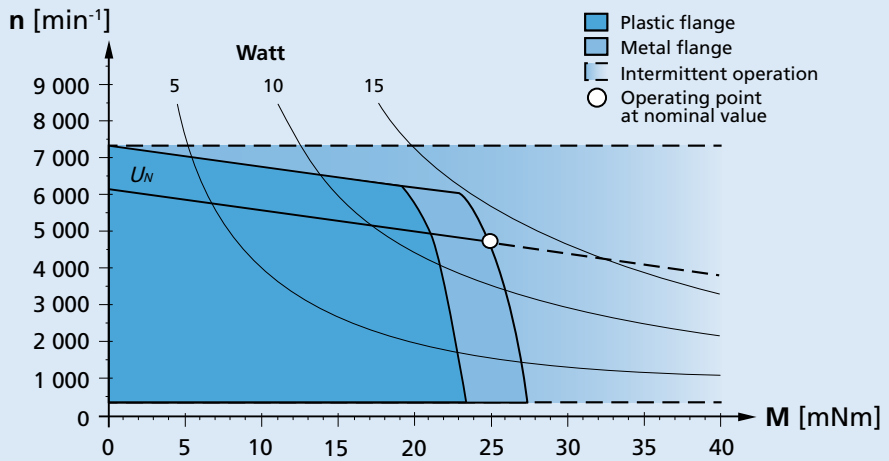

Recommended operation areas (example: nominal voltage 24V)

© DR. FRITZ FAULHABER GMBH & CO. KG
Specifications subject to change without notice.

Dimensional drawing

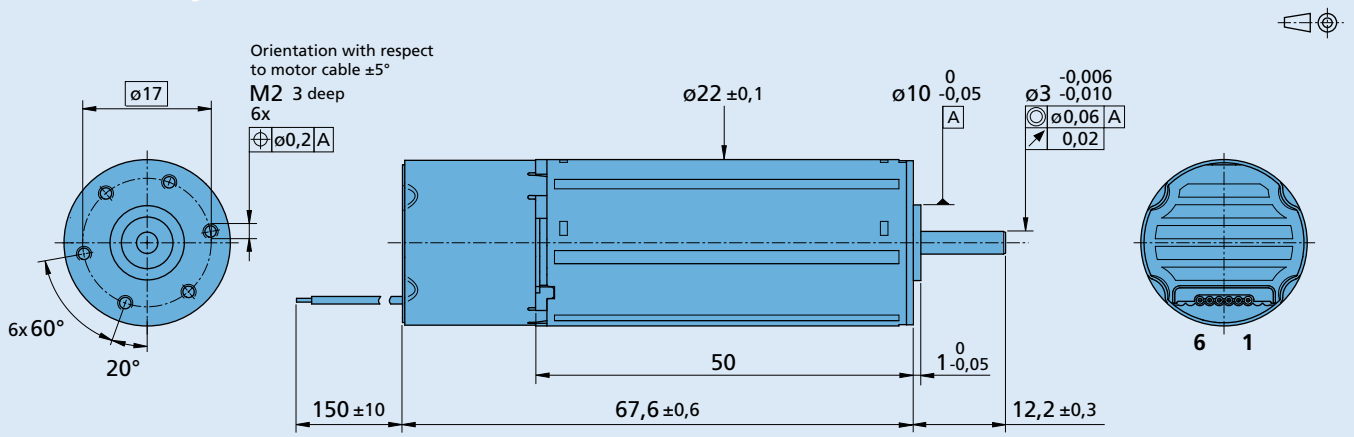

2250 S ... BX4 SC

Option, cable and connection information

Example product designation: **2250S024BX4SC-3809**

Option	Type	Description
3809	Connector	AWG 26 / PVC ribbon cable with connector MOLEX Microfit 3.0, 43025-0600, recommended mating connector 43020-0600
3692	Sensors	Analog Hall Sensors

Connection

Name	Function	Inputs-outputs	Description
1	U_P	power supply electronic	5 ... 28 V DC
2	*Umot*	power supply motor	6 ... 28 V DC
3	GND	ground	
4	*Unsoll*	input voltage	*Uin* = 0 ... 10 V | > 10 V ... U_P » set speed value not defined
		input resistance	*Rin* ≥ 8,9 kΩ
		set speed value	per 1 V , 1 000 min^{-1}
			Uin < 0,15 V » motor stops
			Uin > 0,3 V » motor starts
5	DIR	direction of rotation	to ground or *U* < 0,5 V » counterclockwise
			U > 3 V » clockwise
		input resistance	*Rin* ≥ 10 kΩ
6	FG	frequency output	max. U_P; *Imax* = 15 mA; open collector with 22 kΩ pull-up resistor
			6 lines per revolution

Standard cable
PVC ribbon cable 6 x AWG 26, 1,27 mm

Note: For details on the connection assignment, see device manual for the SCS.

Product combination

Precision Gearheads / Lead Screws	Encoders	Drive Electronics	Cables / Accessories
22GPT 22/7 26A 32GPT 22L ... ML 22L ... PB 22L ... SB 32L ... ML 32L ... PB 32L ... SB 32L ... TL		Integrated	To view our large range of accessory parts, please refer to the "Accessories" chapter.

© DR. FRITZ FAULHABER GMBH & CO. KG
Specifications subject to change without notice.

Brushless DC-Servomotors

60 mNm

with integrated Speed Controller

32 W

4 Pole Technology

3242 ... BX4 SC

Values at 22°C and nominal voltage	3242 G		012 BX4 SC	024 BX4 SC	
Power supply electronic	U_P		6,5 ... 30	6,5 ... 30	V DC
Power supply motor	U_{mot}		6,5 ... 30	6,5 ... 30	V DC
Nominal voltage for motor	U_N		12	24	V
No-load speed (at U_N)	n_0		5 500	5 500	min^{-1}
Peak torque (S2 operation for max. 3s/2s)	$M_{max.}$		100	120	mNm
Torque constant	k_M		21	42,1	mNm/A
PWM switching frequency	f_{PWM}		96	96	kHz
Efficiency electronic	η		95	95	%
Standby current for electronic (@ U_N)	I_{el}		0,017	0,01	A
Speed range (up to 24V / 30V)			400 ... 11 500	400 ... 7 000	min^{-1}
Shaft bearings		ball bearings, preloaded			
Shaft load max.:					
– with shaft diameter		5			mm
– radial at 3 000 min^{-1} (3 mm from mounting flange)		50			N
– axial at 3 000 min^{-1} (push / pull)		5			N
– axial at standstill (push / pull)		50			N
Shaft play:					
– radial		≤ 0,015			mm
– axial		= 0			mm
Operating temperature range		-40 ... +100			°C
Housing material		stainless steel			
Mass		192			g

Rated values for continuous operation					
Rated torque	M_N		50	60	mNm
Rated current (thermal limit)	I_N		2,76	1,66	A
Rated speed	n_N		3 750	3 900	min^{-1}

Interface / range of functions	... SC
Configuration from Motion Manager 5.0	via USB Programming Adapter
Operating modes	Integrated speed control via PI controller and external set value specification; commutation via digital Hall sensors (or optionally via analog Hall sensors). Can optionally be operated in voltage controller mode or fixed speed mode.
Speed range	Digital Hall = from 400 min^{-1}, analog Hall = from 50 min^{-1}
Additional functions	Integrated current limitating to protect against thermal overload. Intermittent operation (S2) with up to double the continuous current. Separate voltage supply for motor and electronics. Direction of rotation changeover through separate switching input; reading of speed signal via frequency output.

Note:

The display shows the range of possible operation points of the drives at a given ambient temperature of 22°C.

The diagram indicates the recommended speed in relation to the available torque at the output shaft.
It includes the assembly on a plastic- as well as on a metal flange (assembly method: IM B 5).

The nominal voltage linear slope describes the maximal achievable operating points at nominal voltage.
Any points of operation above this linear slope will require a supply voltage $U_{mot} > U_N$.

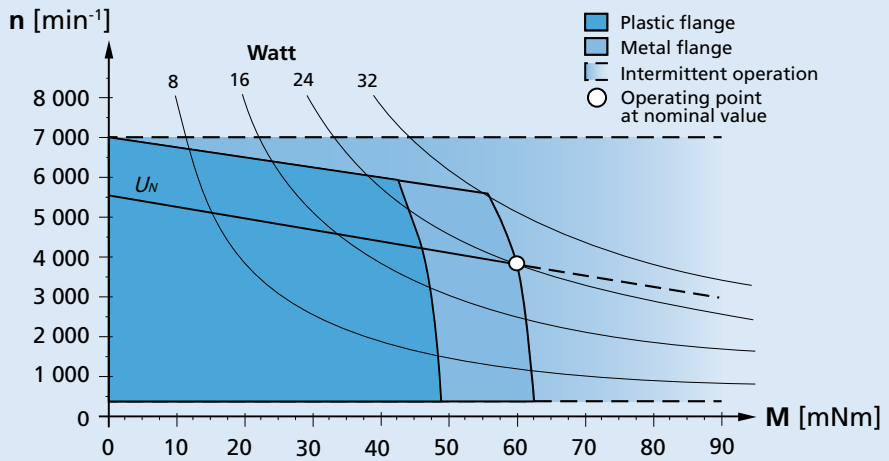

Recommended operation areas (example: nominal voltage 24V)

For notes on technical data and lifetime performance refer to "Technical Information".

Edition 2023 Mar. 31

Backwards

© DR. FRITZ FAULHABER GMBH & CO. KG
Specifications subject to change without notice.

www.faulhaber.com

Dimensional drawing

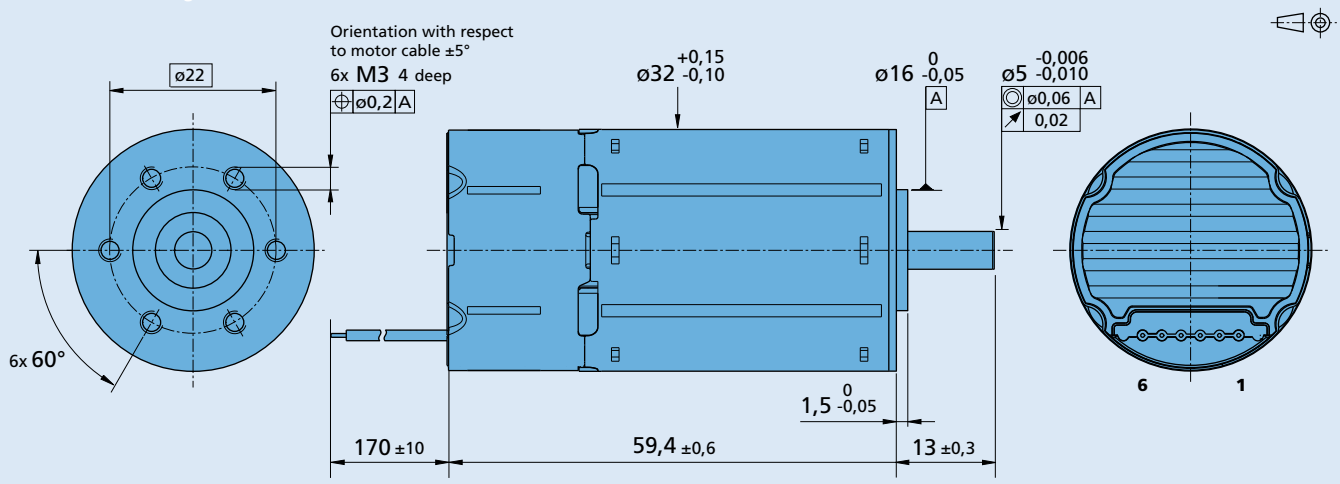

3242 G ... BX4 SC

Option, cable and connection information

Example product designation: **3242G024BX4SC-3692**

Option	Type	Description
3809	Connector	AWG 24 / PVC ribbon cable with connector MOLEX Microfit 3.0, 43025-0600, recommended mating connector 43020-0600
3692	Sensors	Hall Sensors

Connection

Name	Function	Inputs-outputs	Description
1	U_P	power supply electronic	6,5 ... 30 V DC
2	*Umot*	power supply electronic coil	6,5 ... 30 V DC
3	GND	ground	
4	*Unsoll*	analog input voltage input resistance set speed value	*Uin* = 0 ... 10 V | > 10 V ... U_P » set speed value not defined *Rin* ≥ 8,9 kΩ per 1 V , 1 000 min^{-1} *Uin* < 0,15 V » motor stops *Uin* > 0,3 V » motor starts
5	DIR	direction of rotation input resistance	to ground or *U* < 0,5 V » counterclockwise open or level > 3 V » clockwise *Rin* ≥ 10 kΩ
6	FG	frequency output	max. U_P; *Imax* = 15 mA; open collector with 22 kΩ pull-up resistor 6 lines per revolution

Standard cable
PVC ribbon cable 6 x AWG 24, 2,54 mm

Note: For details on the connection assignment, see device manual for the SCS.

Product combination

Precision Gearheads / Lead Screws	Encoders	Drive Electronics	Cables / Accessories
32GPT 32/3R 38/1 38/1 S 38/2 38/2 S 42GPT 32L ... TL 32L ... ML 32L ... SB 32L ... PB		Integrated	To view our large range of accessory parts, please refer to the "Accessories" chapter.

© DR. FRITZ FAULHABER GMBH & CO. KG
Specifications subject to change without notice.

Brushless DC-Servomotors

45 mNm

with integrated Speed Controller
4 Pole Technology

24 W

3242 ... BX4 SCDC

Values at 22°C and nominal voltage	3242 G		012 BX4 SCDC	024 BX4 SCDC	
Supply voltage (CW)	U_{mot+}		6,5 ... 30	6,5 ... 30	V DC
Supply voltage (CCW)	U_{mot-}		6,5 ... 30	6,5 ... 30	V DC
Nominal voltage for motor	U_N		12	24	V
No-load speed (at U_N)	n_0		5 300	5 500	min^{-1}
Peak torque (S2 operation for max. 5s/14s)	$M_{max.}$		78	90	mNm
Torque constant	k_M		21	42,1	mNm/A
PWM switching frequency	f_{PWM}		96	96	kHz
Efficiency electronic	η		95	95	%
Standby current for electronic (@ U_N)	I_{el}		0,017	0,01	A
Speed range (up to 24V / 30V)			400 ... 11 200	400 ... 7 000	min^{-1}
Shaft bearings		ball bearings, preloaded			
Shaft load max.:					
– with shaft diameter		5			mm
– radial at 3 000 min^{-1} (3 mm from mounting flange)		50			N
– axial at 3 000 min^{-1} (push / pull)		5			N
– axial at standstill (push / pull)		50			N
Shaft play:					
– radial		≤ 0,015			mm
– axial		= 0			mm
Operating temperature range		-40 ... +85			°C
Housing material		stainless steel			
Mass		189			g

Rated values for continuous operation					
Rated torque	M_N		39	45	mNm
Rated current (thermal limit)	I_N		2,1	1,22	A
Rated speed	n_N		4 050	4 300	min^{-1}

Interface / range of functions	... SCDC
Operating modes	Motor variant with integrated speed controller with two-wire interface without communication possibility; commutation via digital Hall sensors. Fixed speed control using integrated PI controller. Direction of rotation changeover through reversing the supply voltage polarity.
Speed range	Digital Hall = from 400 min^{-1}
Additional functions	Integrated current limitation to protect against thermal overload. Short-time operation (S2) with up to double the continuous current. Voltage controller substituting DC motors in certain applications. Customer-specific firmware available on request.

Note:
The display shows the range of possible operation points of the drives at a given ambient temperature of 22°C.

The diagram indicates the recommended speed in relation to the available torque at the output shaft.
It includes the assembly on a plastic- as well as on a metal flange (assembly method: IM B 5).

The nominal voltage linear slope describes the maximal achievable operating points at nominal voltage.
Any points of operation above this linear slope will require a supply voltage $U_{mot} > U_N$.

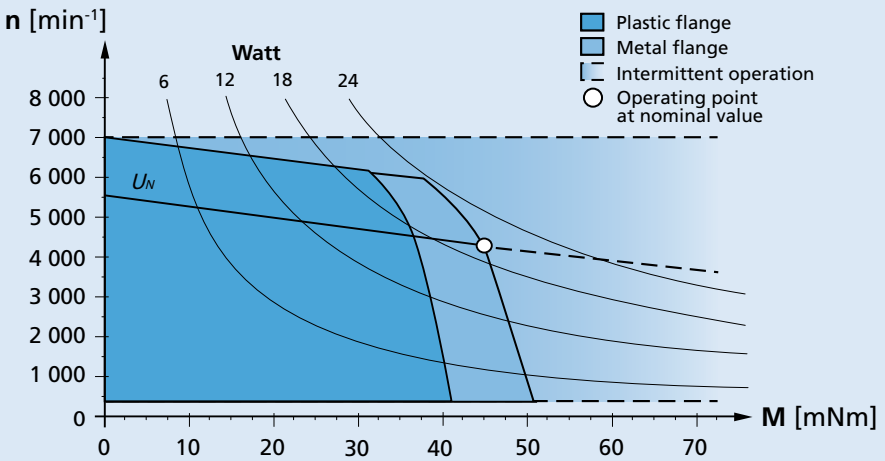

Recommended operation areas (example: nominal voltage 24V)

For notes on technical data and lifetime performance refer to "Technical Information".

Edition 2023 Mar. 31

Backwards

© DR. FRITZ FAULHABER GMBH & CO. KG
Specifications subject to change without notice.

www.faulhaber.com

Dimensional drawing

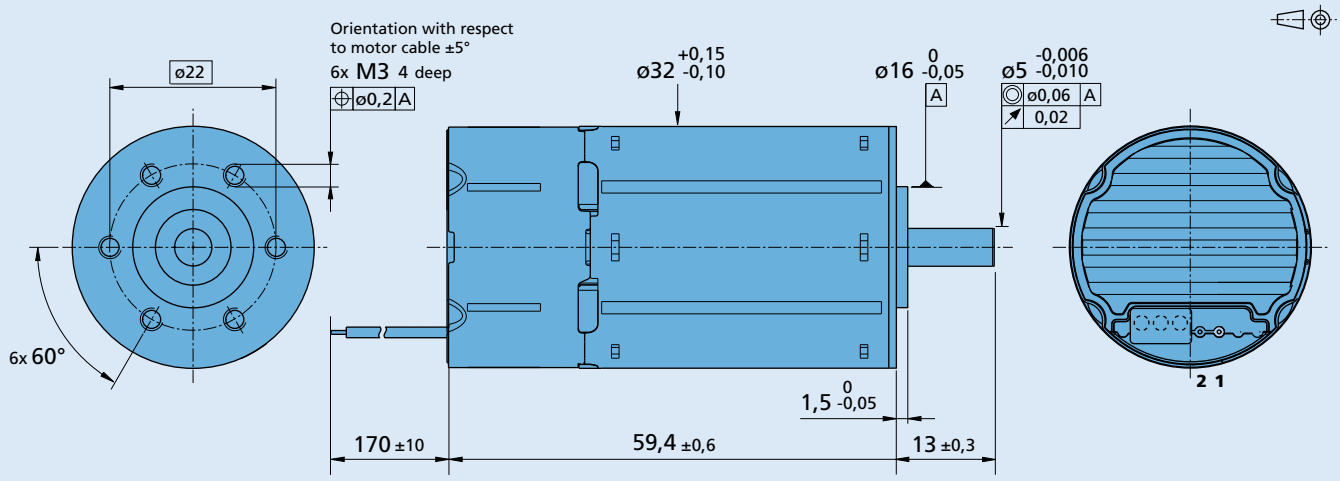

3242 G ... BX4 SCDC

Option, cable and connection information

Example product designation: **3242G024BX4SCDC-4140**

Option	Type	Description
4140	Connector	AWG 24 / PVC ribbon cable with connector MOLEX Microfit 3.0, 43025-0200, recommended mating connector 43020-0200

Connection

No.	Function	Description
1	Mot +	positive power supply
2	Mot -	negative power supply

Standard cable
PVC ribbon cable 2 x AWG 24, 2,54 mm

Note: For details on the connection assignment, see device manual for the SCS.

Product combination

Precision Gearheads / Lead Screws	Encoders	Drive Electronics	Cables / Accessories
32GPT 32/3R 38/1 38/1 S 38/2 38/2 S 42GPT 32L ... TL 32L ... ML 32L ... SB 32L ... PB		Integrated	To view our large range of accessory parts, please refer to the "Accessories" chapter.

© DR. FRITZ FAULHABER GMBH & CO. KG
Specifications subject to change without notice.

Brushless DC-Servomotors

99 mNm

with integrated Speed Controller

53 W

4 Pole Technology

3268 ... BX4 SC

Values at 22°C and nominal voltage	3268 G		024 BX4 SC	
Power supply electronic	U_P		6,5 ... 30	V DC
Power supply motor	U_{mot}		6,5 ... 30	V DC
Nominal voltage for motor	U_N		24	V
No-load speed (at U_N)	n_0		5 100	min^{-1}
Peak torque (S2 operation for max. 3s)	$M_{max.}$		198	mNm
Torque constant	k_M		43,5	mNm/A
PWM switching frequency	f_{PWM}		96	kHz
Efficiency electronic	η		95	%
Standby current for electronic (@ U_N)	I_{el}		0,01	A
Speed range (up to 30V)			400 ... 6 500	min^{-1}
Shaft bearings		ball bearings, preloaded		
Shaft load max.:				
– with shaft diameter		5		mm
– radial at 3 000 min^{-1} (3 mm from mounting flange)		50		N
– axial at 3 000 min^{-1} (push / pull)		5		N
– axial at standstill (push / pull)		50		N
Shaft play:				
– radial		≤ 0,015		mm
– axial		= 0		mm
Operating temperature range		-40 ... +100		°C
Housing material		stainless steel		
Mass		305		g

Rated values for continuous operation				
Rated torque	M_N		99	mNm
Rated current (thermal limit)	I_N		2,53	A
Rated speed	n_N		4 200	min^{-1}

Interface / range of functions	... SC
Configuration from Motion Manager 5.0	via USB Programming Adapter
Operating modes	Integrated speed control via PI controller and external set value specification; commutation via digital Hall sensors (or optionally via analog Hall sensors). Can optionally be operated in voltage controller mode or fixed speed mode.
Speed range	Digital Hall = from 400 min^{-1}, analog Hall = from 50 min^{-1}
Additional functions	Integrated current limitating to protect against thermal overload. Intermittent operation (S2) with up to double the continuous current. Separate voltage supply for motor and electronics. Direction of rotation changeover through separate switching input; reading of speed signal via frequency output.

Note:

The display shows the range of possible operation points of the drives at a given ambient temperature of 22°C.

The diagram indicates the recommended speed in relation to the available torque at the output shaft.
It includes the assembly on a plastic- as well as on a metal flange (assembly method: IM B 5).

The nominal voltage linear slope describes the maximal achievable operating points at nominal voltage.
Any points of operation above this linear slope will require a supply voltage $U_{mot} > U_N$.

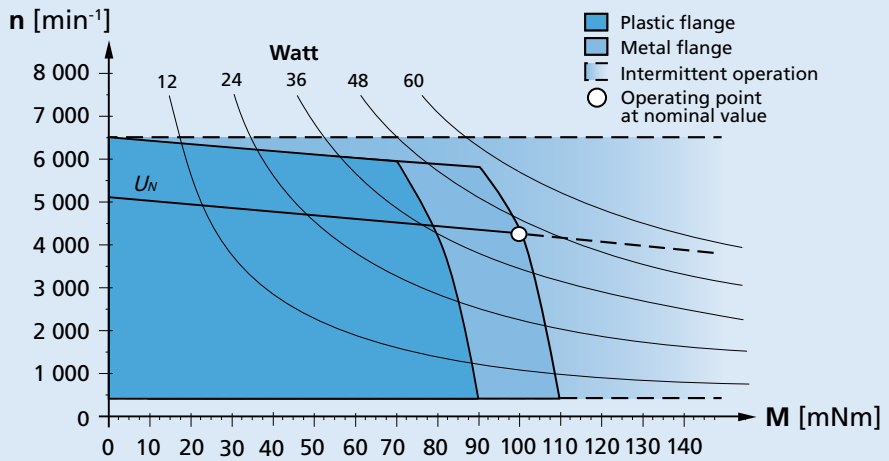

Recommended operation areas (example: nominal voltage 24V)

For notes on technical data and lifetime performance refer to "Technical Information".

Edition 2023 Mar. 31

Backwards

© DR. FRITZ FAULHABER GMBH & CO. KG
Specifications subject to change without notice.

www.faulhaber.com

Dimensional drawing

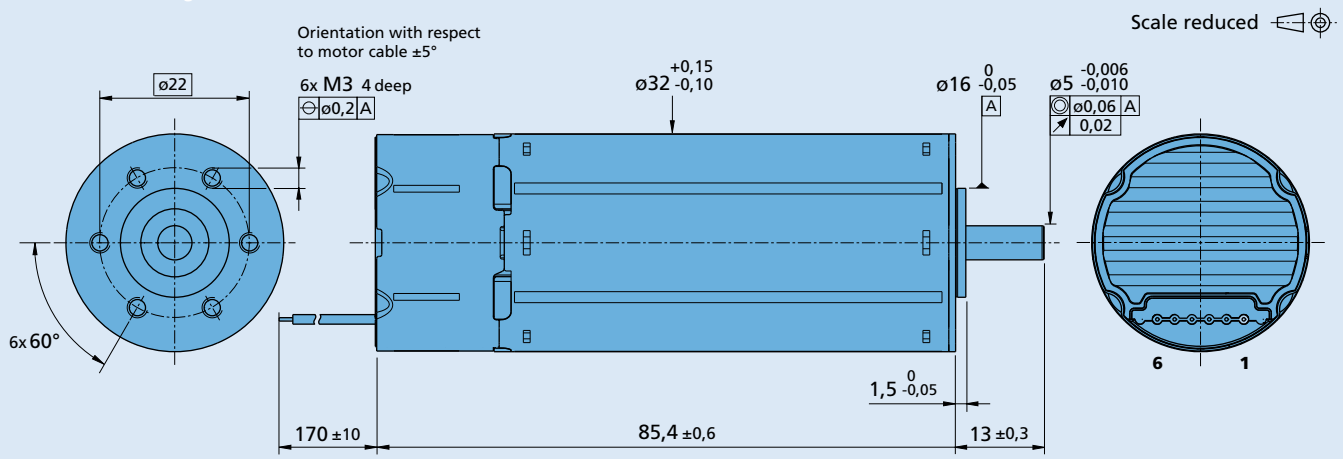

3268 G ... BX4 SC

Option, cable and connection information

Example product designation: **3268G024BX4SC-3692**

Option	Type	Description
3809	Connector	AWG 24 / PVC ribbon cable with connector MOLEX Microfit 3.0, 43025-0600, recommended mating connector 43020-0600
3692	Sensors	Hall Sensors

Connection

Name	Function	Inputs-outputs	Description
1	U_P	power supply electronic	6,5 ... 30 V DC
2	*Umot*	power supply electronic coil	6,5 ... 30 V DC
3	GND	ground	
4	*Unsoll*	analog input voltage input resistance set speed value	*Uin* = 0 ... 10 V | > 10 V ... U_P » set speed value not defined *Rin* ≥ 8,9 kΩ per 1 V , 1 000 min^{-1} *Uin* < 0,15 V » motor stops *Uin* > 0,3 V » motor starts
5	DIR	direction of rotation input resistance	to ground or *U* < 0,5 V » counterclockwise open or level > 3 V » clockwise *Rin* ≥ 10 kΩ
6	FG	frequency output	max. U_P; *Imax* = 15 mA; open collector with 22 kΩ pull-up resistor 6 lines per revolution

Standard cable
PVC ribbon cable 6 x AWG 24, 2,54 mm

Note: For details on the connection assignment, see device manual for the SCS.

Product combination

Precision Gearheads / Lead Screws	Encoders	Drive Electronics	Cables / Accessories
32GPT 32/3R 38/1 38/1 S 38/2 38/2 S 42GPT 32L ... TL 32L ... ML 32L ... SB 32L ... PB		Integrated	To view our large range of accessory parts, please refer to the "Accessories" chapter.

© DR. FRITZ FAULHABER GMBH & CO. KG
Specifications subject to change without notice.

Brushless DC-Servomotors

with integrated Speed Controller
4 Pole Technology

60 mNm
30 W

3268 ... BX4 SCDC

Values at 22°C and nominal voltage	3268 G		024 BX4 SCDC	
Supply voltage (CW)	U_{mot+}		6,5 ... 30	V DC
Supply voltage (CCW)	U_{mot-}		6,5 ... 30	V DC
Nominal voltage for motor	U_N		24	V
No-load speed (at U_N)	n_0		5 500	min^{-1}
Peak torque (S2 operation for max. 8s)	$M_{max.}$		120	mNm
Torque constant	k_M		43,5	mNm/A
PWM switching frequency	f_{PWM}		96	kHz
Efficiency electronic	η		95	%
Standby current for electronic (@ U_N)	I_{el}		0,01	A
Speed range (up to 30V)			400 ... 7 000	min^{-1}
Shaft bearings		ball bearings, preloaded		
Shaft load max.:				
– with shaft diameter		5		mm
– radial at 3 000 min^{-1} (3 mm from mounting flange)		50		N
– axial at 3 000 min^{-1} (push / pull)		5		N
– axial at standstill (push / pull)		50		N
Shaft play:				
– radial		≤ 0,015		mm
– axial		= 0		mm
Operating temperature range		-40 ... +85		°C
Housing material		stainless steel		
Mass		305		g

Rated values for continuous operation				
Rated torque	M_N		60	mNm
Rated current (thermal limit)	I_N		1,6	A
Rated speed	n_N		4 700	min^{-1}

Interface / range of functions	... SCDC
Operating modes	Motor variant with integrated speed controller with two-wire interface without communication possibility; commutation via digital Hall sensors. Fixed speed control using integrated PI controller. Direction of rotation changeover through reversing the supply voltage polarity.
Speed range	Digital Hall = from 400 min^{-1}
Additional functions	Integrated current limitation to protect against thermal overload. Short-time operation (S2) with up to double the continuous current. Voltage controller substituting DC motors in certain applications. Customer-specific firmware available on request.

Note:
The display shows the range of possible operation points of the drives at a given ambient temperature of 22°C.

The diagram indicates the recommended speed in relation to the available torque at the output shaft.
It includes the assembly on a plastic- as well as on a metal flange (assembly method: IM B 5).

The nominal voltage linear slope describes the maximal achievable operating points at nominal voltage.
Any points of operation above this linear slope will require a supply voltage $U_{mot} > U_N$.

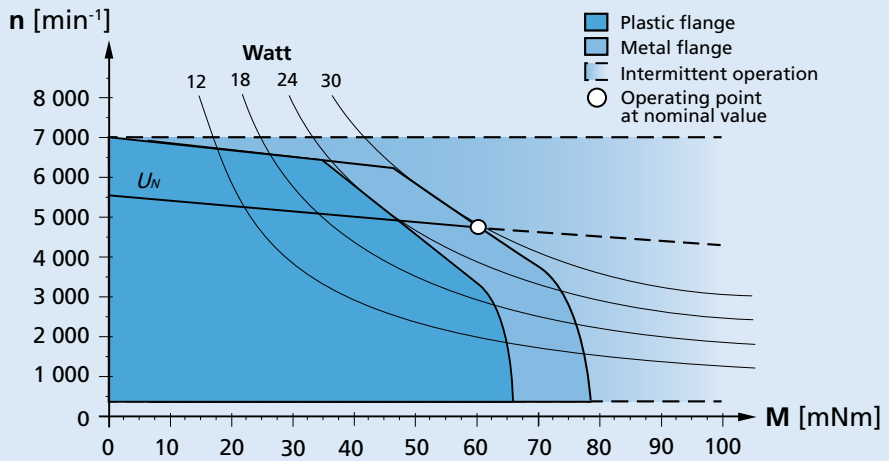

Recommended operation areas (example: nominal voltage 24V)

For notes on technical data and lifetime performance refer to "Technical Information".

Edition 2023 Mar. 31

Backwards

© DR. FRITZ FAULHABER GMBH & CO. KG
Specifications subject to change without notice.

www.faulhaber.com

Dimensional drawing

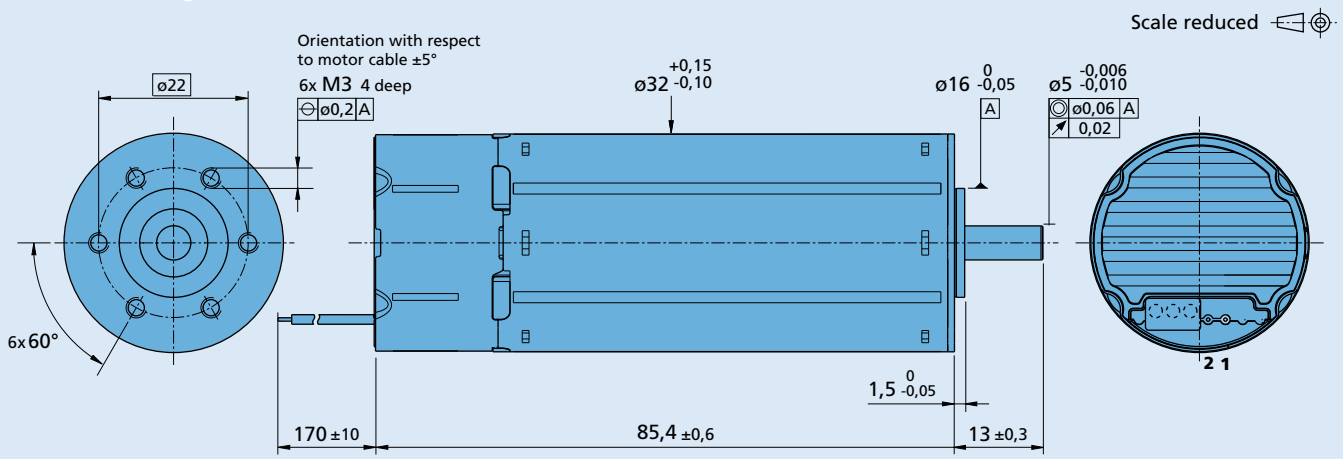

3268 G ... BX4 SCDC

Option, cable and connection information

Example product designation: **3268G024BX4SCDC-4140**

Option	Type	Description
4140	Connector	AWG 24 / PVC ribbon cable with connector MOLEX Microfit 3.0, 43025-0200, recommended mating connector 43020-0200

Connection

No.	Function	Description
1	Mot +	positive power supply
2	Mot -	negative power supply

Standard cable
PVC ribbon cable 2 x AWG 24, 2,54 mm

Note: For details on the connection assignment, see device manual for the SCS.

Product combination

Precision Gearheads / Lead Screws	Encoders	Drive Electronics	Cables / Accessories
32GPT 32/3R 38/1 38/1 S 38/2 38/2 S 42GPT 32L ... TL 32L ... ML 32L ... SB 32L ... PB		Integrated	To view our large range of accessory parts, please refer to the "Accessories" chapter.

© DR. FRITZ FAULHABER GMBH & CO. KG
Specifications subject to change without notice.

FAULHABER BXT SC

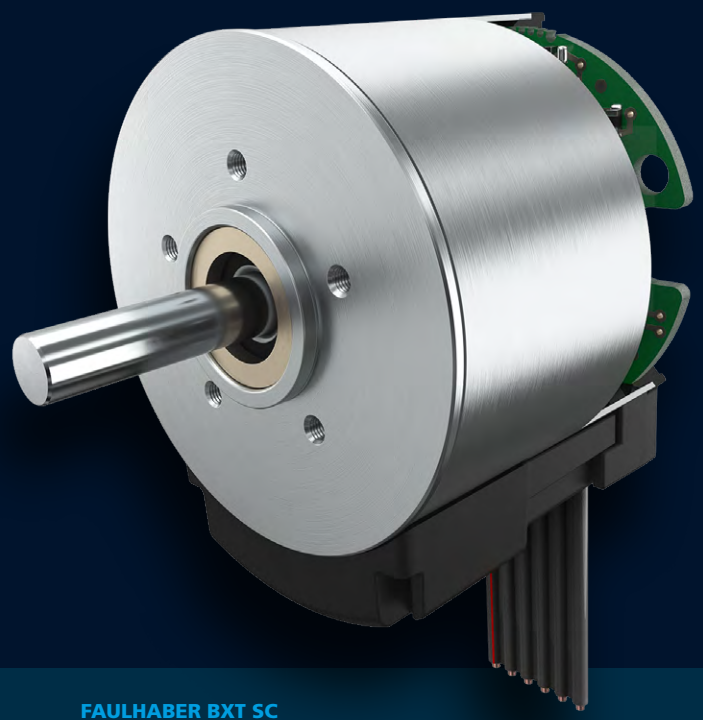

FAULHABER BXT SC

2214...BXTH SC with int. SC, ext. rotor, with housing	10 mNm
3216...BXTH SC with int. SC, ext. rotor, with housing	35 mNm
4221...BXTH SC with int. SC, ext. rotor, with housing	92 mNm

Backwards

Brushless DC-Servomotors

10 mNm

with integrated Speed Controller,
external rotor technology, with housing

5 W

2214 ... BXT H SC

Values at 22°C and nominal voltage	2214 S		012 BXT H SC	024 BXT H SC	
Power supply electronic	U_P		5 ... 28	5 ... 28	V DC
Power supply motor	U_{mot}		5 ... 28	5 ... 28	V DC
Nominal voltage for motor	U_N		12	24	V
No-load speed (at U_N)	n_0		6 590	6 800	min^{-1}
Peak torque (S2 operation for max. 5s)	$M_{max.}$		20	20	mNm
Torque constant	k_M		15,4	28,6	mNm/A
PWM switching frequency	f_{PWM}		96	96	kHz
Efficiency electronic	η		95	95	%
Standby current for electronic (@ U_N)	I_{el}		0,02	0,02	A
Speed range (up to 18V / 28V)			200 ... 10 000	200 ... 8 500	min^{-1}

Shaft bearings	ball bearings, preloaded	
Shaft load max.:		
– with shaft diameter	3	mm
– radial at 3 000 min^{-1} (3 mm from mounting flange)	6	N
– axial at 3 000 min^{-1} (push / pull)	2	N
– axial at standstill (push / pull)	50	N
Shaft play:		
– radial	≤ 0,015	mm
– axial	= 0	mm
Operating temperature range	-40 ... +100	°C
Housing material	stainless steel	
Mass	28	g

Rated values for continuous operation					
Rated torque	M_N		10	10	mNm
Rated current (thermal limit)	I_N		0,65	0,35	A
Rated speed	n_N		2 580	3 000	min^{-1}

Interface / range of functions	... SC
Configuration from Motion Manager 6.6	via USB Programming Adapter
Operating modes	Integrated speed control via PI controller and external set value specification; commutation via digital Hall sensors. Can optionally be operated in voltage controller mode or fixed speed mode.
Speed range	Digital Hall = from 200 min^{-1}
Additional functions	Integrated current limitating to protect against thermal overload. Intermittent operation (S2) with up to double the continuous current. Separate voltage supply for motor and electronics. Direction of rotation changeover through separate switching input; reading of speed signal via frequency output.

Note:

The display shows the range of possible operation points of the drives at a given ambient temperature of 22°C.

The diagram indicates the recommended speed in relation to the available torque at the output shaft.
It includes the assembly on a plastic- as well as on a metal flange (assembly method: IM B 5).

The nominal voltage linear slope describes the maximal achievable operating points at nominal voltage.
Any points of operation above this linear slope will require a supply voltage $U_{mot} > U_N$.

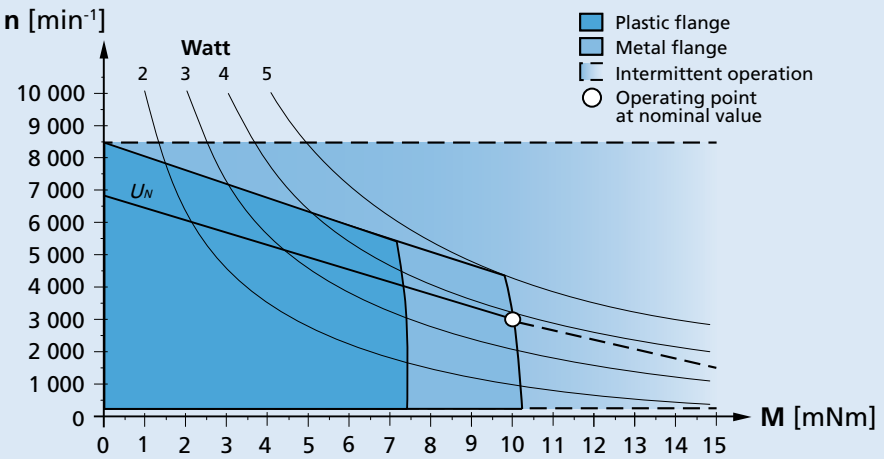

Recommended operation areas (example: nominal voltage 24V)

For notes on technical data and lifetime performance refer to "Technical Information".

Edition 2023 Nov. 14

Backwards

© DR. FRITZ FAULHABER GMBH & CO. KG
Specifications subject to change without notice.

www.faulhaber.com

Dimensional drawing

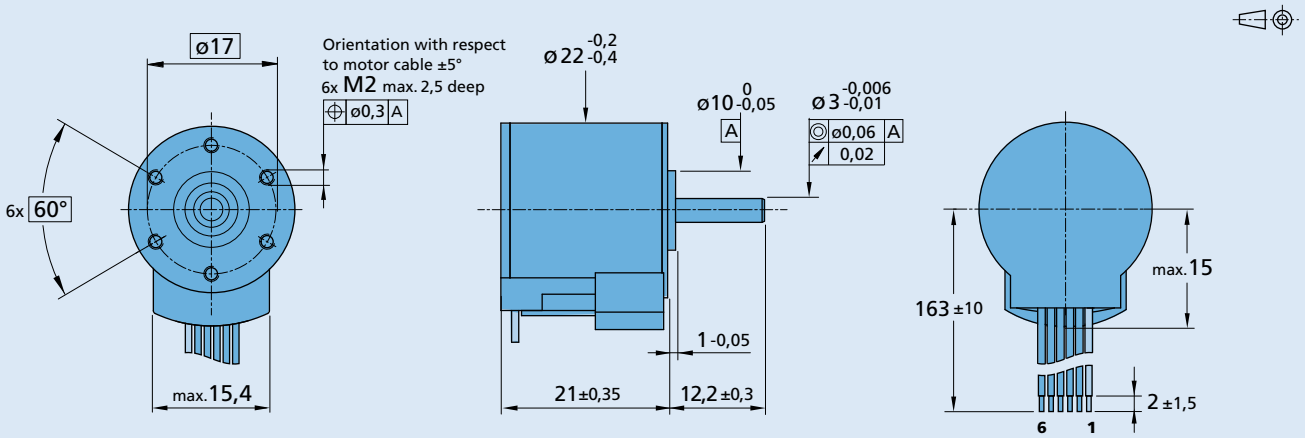

2214 S ... BXT H SC

Option, cable and connection information

Example product designation: **2214S024BXTHSC**

Option	Type	Description
3809	Connector	AWG 26 / PVC ribbon cable with connector MOLEX Microfit 3.0, 43025-0600, recommended mating connector 43020-0600
4337	Gearhead combination	For combination with gearhead 20/1R

Connection

Name	Function	Inputs-outputs	Description
1	*UP*	power supply electronic	5 ... 28 V DC
2	*Umot*	power supply motor	5 ... 28 V DC
3	GND	ground	
4	*Unsoll*	input voltage input resistance set speed value	*Uin* = 0 ... 10 V | > 10 V ... *UP* » set speed value not defined *Rin* ≥ 8,9kΩ per 1 V , 1 000 min^{-1} *Uin* < 0,15 V » motor stops *Uin* > 0,3 V » motor starts
5	DIR	direction of rotation input resistance	to ground or *U* < 0,5 V » counterclockwise *U* > 3 V » clockwise *Rin* ≥ 10 kΩ
6	FG	frequency output	max. *UP*; *Imax* = 15 mA; open collector with 22 kΩ pull-up resistor 21 lines per revolution

Standard cable
PVC ribbon cable 6 x AWG 26, 1,27 mm

Note: For details on the connection assignment, see device manual for the SCS.

Product combination

Precision Gearheads / Lead Screws	Encoders	Drive Electronics	Cables / Accessories
20/1R 22GPT 26/1R 22L ... ML 22L ... SB 22L ... PB		Integrated	To view our large range of accessory parts, please refer to the "Accessories" chapter.

© DR. FRITZ FAULHABER GMBH & CO. KG
Specifications subject to change without notice.

Brushless DC-Servomotors

35 mNm

20 W

with integrated Speed Controller,
external rotor technology, with housing

3216 ... BXT H SC

Values at 22°C and nominal voltage	3216 W		012 BXT H SC	024 BXT H SC	
Power supply electronic	U_P		6,5 ... 30	6,5 ... 30	V DC
Power supply motor	U_{mot}		6,5 ... 30	6,5 ... 30	V DC
Nominal voltage for motor	U_N		12	24	V
No-load speed (at U_N)	n_0		6 300	6 300	min^{-1}
Peak torque (S2 operation for max. 5s)	$M_{max.}$		67	70	mNm
Torque constant	k_M		17	35	mNm/A
PWM switching frequency	f_{PWM}		24	24	kHz
Efficiency electronic	η		95	95	%
Standby current for electronic (@ U_N)	I_{el}		0,02	0,02	A
Speed range (up to 19V / 28V)			200 ... 10 000	200 ... 7 900	min^{-1}
Shaft bearings		ball bearings, preloaded			
Shaft load max.:					
– with shaft diameter		4			mm
– radial at 3 000 min^{-1} (3 mm from mounting flange)		15			N
– axial at 3 000 min^{-1} (push / pull)		3			N
– axial at standstill (push / pull)		50			N
Shaft play:					
– radial		≤ 0,015			mm
– axial		= 0			mm
Operating temperature range		-40 ... +100			°C
Housing material		stainless steel			
Mass		64			g

Rated values for continuous operation					
Rated torque	M_N		33,5	35	mNm
Rated current (thermal limit)	I_N		1,95	1	A
Rated speed	n_N		4 100	4 400	min^{-1}

Interface / range of functions	... SC
Configuration from Motion Manager 6.6	via USB Programming Adapter
Operating modes	Integrated speed control via PI controller and external set value specification; commutation via digital Hall sensors. Can optionally be operated in voltage controller mode or fixed speed mode.
Speed range	Digital Hall = from 200 min^{-1}
Additional functions	Integrated current limitating to protect against thermal overload. Intermittent operation (S2) with up to double the continuous current. Separate voltage supply for motor and electronics. Direction of rotation changeover through separate switching input; reading of speed signal via frequency output.

Note:

The display shows the range of possible operation points of the drives at a given ambient temperature of 22°C.

The diagram indicates the recommended speed in relation to the available torque at the output shaft.
It includes the assembly on a plastic- as well as on a metal flange (assembly method: IM B 5).

The nominal voltage linear slope describes the maximal achievable operating points at nominal voltage.
Any points of operation above this linear slope will require a supply voltage $U_{mot} > U_N$.

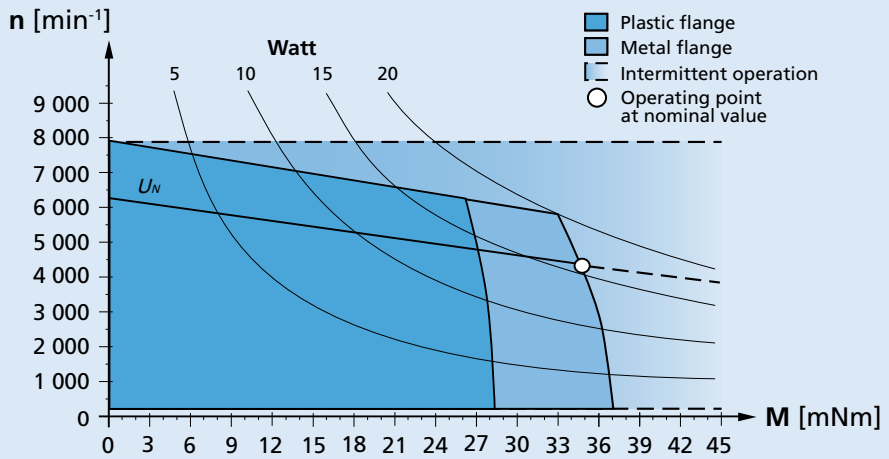

Recommended operation areas (example: nominal voltage 24V)

© DR. FRITZ FAULHABER GMBH & CO. KG
Specifications subject to change without notice.

Dimensional drawing

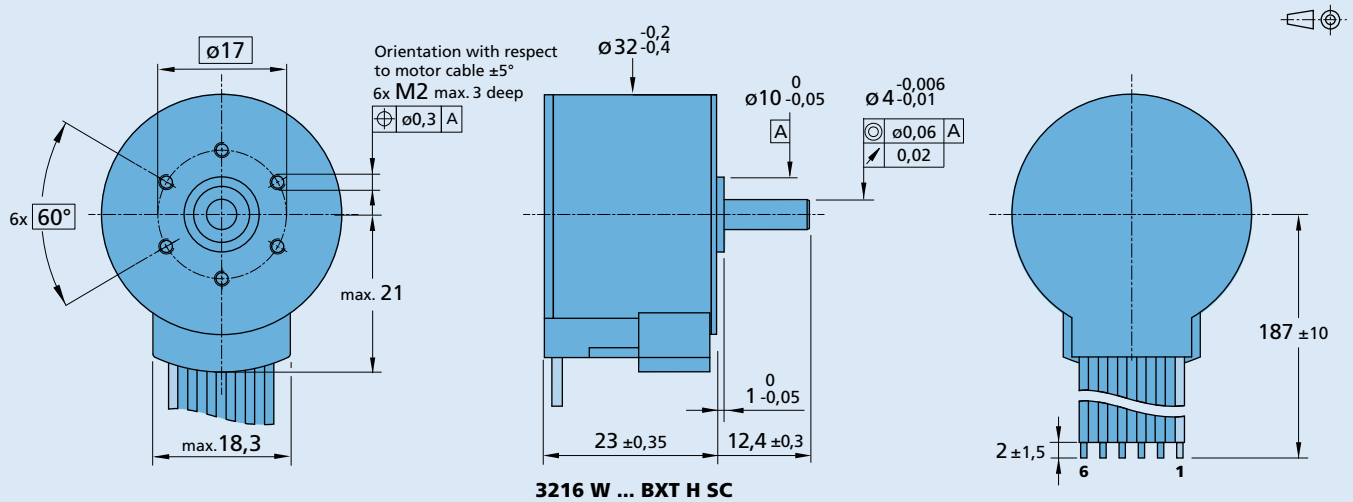

3216 W ... BXT H SC

Option, cable and connection information

Example product designation: **3216W024BXTHSC**

Option	Type	Description
3809	Connector	AWG 24 / PVC ribbon cable with connector MOLEX Microfit 3.0, 43025-0600, recommended mating connector 43020-0600

Connection

Name	Function	Inputs-outputs	Description
1	*UP*	power supply electronic	6,5 ... 30 V DC
2	*Umot*	power supply motor	6,5 ... 30 V DC
3	GND	ground	
4	*Unsoll*	input voltage	*Uin* = 0 ... 10 V | > 10 V ... *UP* » set speed value not defined
		input resistance	*Rin* ≥ 8,9kΩ
		set speed value	per 1 V , 1 000 min^{-1} *Uin* < 0,15 V » motor stops *Uin* > 0,3 V » motor starts
5	DIR	direction of rotation	to ground or *U* < 0,5 V » counterclockwise *U* > 3 V » clockwise
		input resistance	*Rin* ≥ 10 kΩ
6	FG	frequency output	max. *UP*; *Imax* = 15 mA; open collector with 22 kΩ pull-up resistor 21 lines per revolution

Standard cable
PVC ribbon cable 6 x AWG 24, 2,54 mm

Note: For details on the connection assignment, see device manual for the SCS.

Product combination

Precision Gearheads / Lead Screws	Encoders	Drive Electronics	Cables / Accessories
22GPT 26A 26/1R 32GPT 32/3R 22L ... ML 22L ... PB 22L ... SB 32L ... ML 32L ... PB 32L ... SB 32L ... TL		Integrated	To view our large range of accessory parts, please refer to the "Accessories" chapter.

© DR. FRITZ FAULHABER GMBH & CO. KG
Specifications subject to change without notice.

Brushless DC-Servomotors

with integrated Speed Controller,
external rotor technology, with housing

92 mNm
60 W

4221 ... BXT H SC

Values at 22°C and nominal voltage	4221 G		024 BXT H SC	
Power supply electronic	U_P		6,5 ... 30	V DC
Power supply motor	U_{mot}		6,5 ... 30	V DC
Nominal voltage for motor	U_N		24	V
No-load speed (at U_N)	n_0		6 200	min^{-1}
Peak torque (S2 operation for max. 5s)	$M_{max.}$		184	mNm
Torque constant	k_M		28,8	mNm/A
PWM switching frequency	f_{PWM}		24	kHz
Efficiency electronic	η		95	%
Standby current for electronic (@ U_N)	I_{el}		0,02	A
Speed range (up to 30V)			200 ... 7 800	min^{-1}
Shaft bearings		ball bearings, preloaded		
Shaft load max.:				
– with shaft diameter		5		mm
– radial at 3 000 min^{-1} (3 mm from mounting flange)		25		N
– axial at 3 000 min^{-1} (push / pull)		4		N
– axial at standstill (push / pull)		50		N
Shaft play:				
– radial		≤ 0,015		mm
– axial		= 0		mm
Operating temperature range		-40 ... +100		°C
Housing material		stainless steel		
Mass		142		g

Rated values for continuous operation				
Rated torque	M_N		92	mNm
Rated current (thermal limit)	I_N		2,58	A
Rated speed	n_N		5 000	min^{-1}

Interface / range of functions	... SC
Configuration from Motion Manager 6.6	via USB Programming Adapter
Operating modes	Integrated speed control via PI controller and external set value specification; commutation via digital Hall sensors. Can optionally be operated in voltage controller mode or fixed speed mode.
Speed range	Digital Hall = from 200 min^{-1}
Additional functions	Integrated current limitating to protect against thermal overload. Intermittent operation (S2) with up to double the continuous current. Separate voltage supply for motor and electronics. Direction of rotation changeover through separate switching input; reading of speed signal via frequency output.

Note:
The display shows the range of possible operation points of the drives at a given ambient temperature of 22°C.

The diagram indicates the recommended speed in relation to the available torque at the output shaft.
It includes the assembly on a plastic- as well as on a metal flange (assembly method: IM B 5).

The nominal voltage linear slope describes the maximal achievable operating points at nominal voltage.
Any points of operation above this linear slope will require a supply voltage $U_{mot} > U_N$.

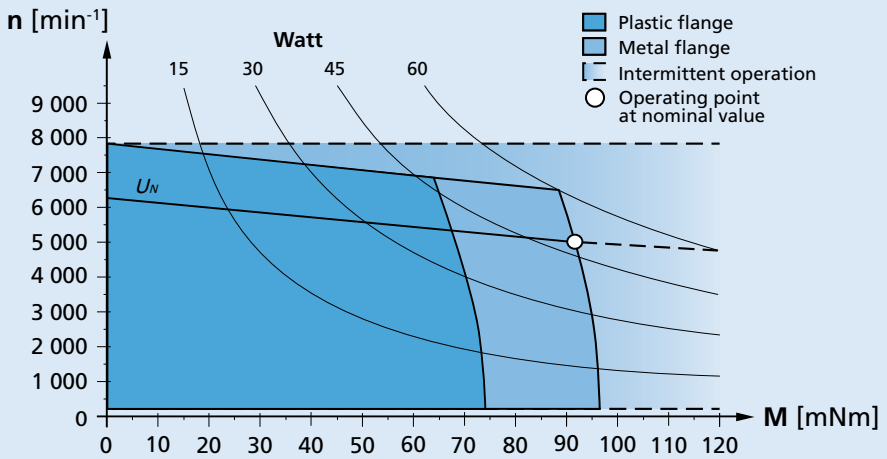

Recommended operation areas (example: nominal voltage 24V)

© DR. FRITZ FAULHABER GMBH & CO. KG
Specifications subject to change without notice.

Dimensional drawing

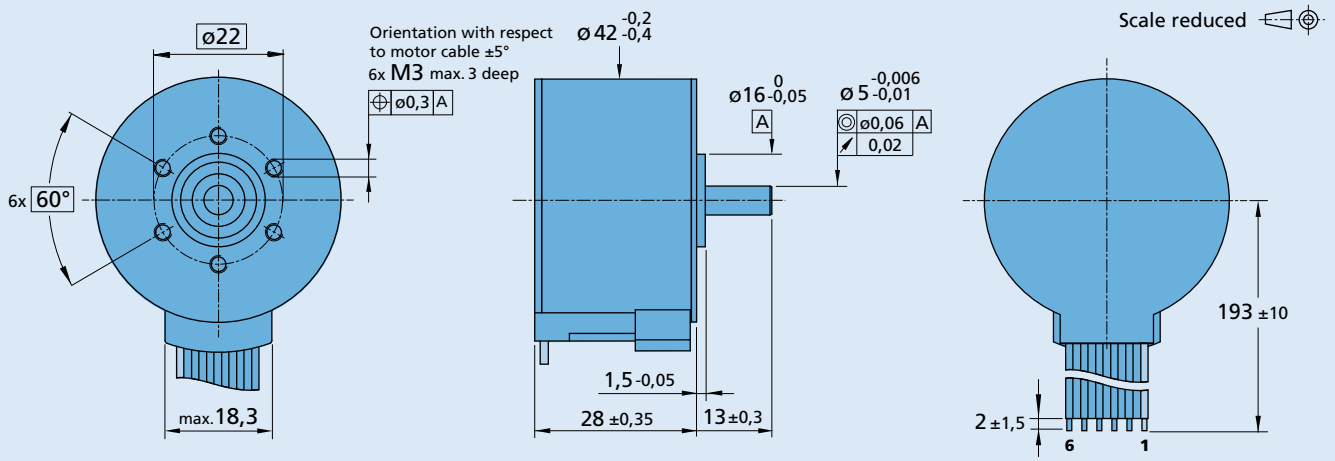

4221 G ... BXT H SC

Option, cable and connection information

Example product designation: **4221G024BXTHSC**

Option	Type	Description
3809	Connector	AWG 24 / PVC ribbon cable with connector MOLEX Microfit 3.0, 43025-0600, recommended mating connector 43020-0600

Connection

Name	Function	Inputs-outputs	Description
1	*UP*	power supply electronic	6,5 ... 30 V DC
2	*Umot*	power supply motor	6,5 ... 30 V DC
3	GND	ground	
4	*Unsoll*	input voltage input resistance set speed value	*Uin* = 0 ... 10 V | > 10 V ... *UP* » set speed value not defined *Rin* ≥ 8,9kΩ per 1 V , 1 000 min^{-1} *Uin* < 0,15 V » motor stops *Uin* > 0,3 V » motor starts
5	DIR	direction of rotation input resistance	to ground or *U* < 0,5 V » counterclockwise *U* > 3 V » clockwise *Rin* ≥ 10 kΩ
6	FG	frequency output	max. *UP*; *Imax* = 15 mA; open collector with 22 kΩ pull-up resistor 21 lines per revolution

Standard cable
PVC ribbon cable 6 x AWG 24, 2,54 mm

Note: For details on the connection assignment, see device manual for the SCS.

Product combination

Precision Gearheads / Lead Screws	Encoders	Drive Electronics	Cables / Accessories
38/1 38/1 S 38/2 38/2 S 42GPT		Integrated	To view our large range of accessory parts, please refer to the "Accessories" chapter.

© DR. FRITZ FAULHABER GMBH & CO. KG
Specifications subject to change without notice.

FAULHABER B-FLAT SC

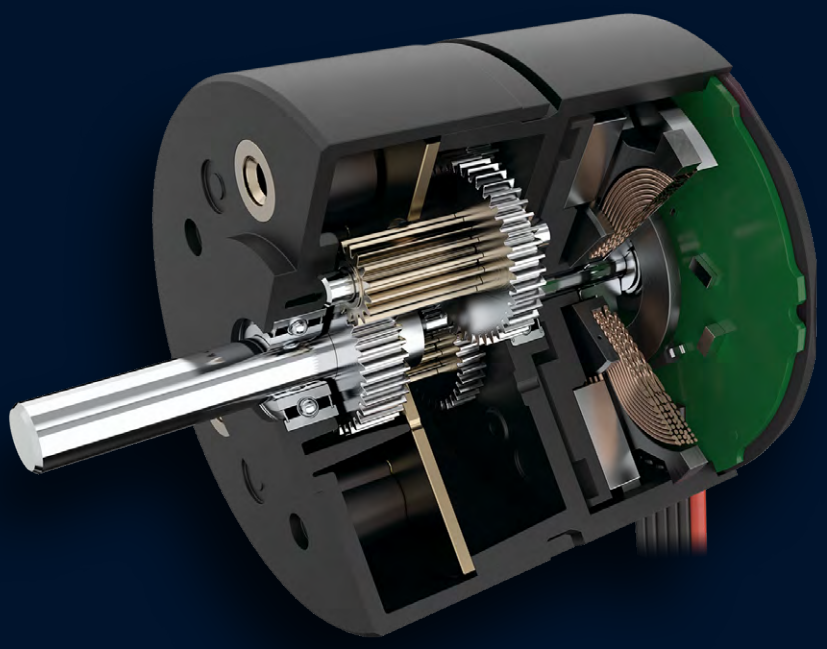

FAULHABER B-FLAT SC

2610...B SC	with integrated Speed Controller	3.12 mNm
2622...B SC	with integrated Speed Controller	100 mNm

Backwards

Brushless DC-Flat Motors 3,12 mNm

with integrated Speed Controller 1,6 W

2610 ... B SC

Values at 22°C and nominal voltage	2610 T		006 B SC	012 B SC	
Power supply electronic	U_P		4 ... 18	4 ... 18	V DC
Power supply motor	U_{mot}		1,7 ... 18	1,7 ... 18	V DC
Nominal voltage for motor	U_N		6	12	V
No-load speed (at U_N)	n_0		6 700	6 650	min⁻¹
Peak torque (S2 operation for max. 2s/1s)	$M_{max.}$		6	6	mNm
Torque constant	k_M		8,8	17,6	mNm/A
PWM switching frequency	f_{PWM}		96	96	kHz
Efficiency electronic	η		95	95	%
Standby current for electronic (at U_N)	I_{el}		0,02	0,02	A
Speed range (up to 12V / 18V)			400 ... 13 300	400 ... 10 000	min⁻¹
Shaft bearings		ball bearings, preloaded			
Shaft load max.:					
– with shaft diameter		1,5			mm
– radial at 3 000 min⁻¹ (3 mm from mounting flange)		4			N
– axial at 3 000 min⁻¹ (push only)		3,5			N
– axial at standstill (push only)		17,5			N
Shaft play:					
– radial		≤ 0,015			µm
– axial		= 0			µm
Operating temperature range		-25 ... +80			°C
Housing material		plastic			
Mass		20,1			g

Rated values for continuous operation					
Rated torque	M_N		3,25	3,12	mNm
Rated current (thermal limit)	I_N		0,53	0,29	A
Rated speed	n_N		1 600	1 300	min⁻¹

Interface / range of functions	... SC
Configuration from Motion Manager 5.0	via USB Programming Adapter
Operating modes	Integrated speed control via PI controller and external set value specification; commutation via digital Hall sensors. Can optionally be operated in voltage controller mode or fixed speed mode.
Speed range	Digital Hall = from 400 min⁻¹
Additional functions	Integrated current limitating to protect against thermal overload. Intermittent operation (S2) with up to double the continuous current. Separate voltage supply for motor and electronics. Direction of rotation changeover through separate switching input; reading of speed signal via frequency output.

Note:

The display shows the range of possible operation points of the drives at a given ambient temperature of 22°C.

The diagram indicates the recommended speed in relation to the available torque at the output shaft.
It includes the assembly on a plastic- as well as on a metal flange (assembly method: IM B 5).

The nominal voltage linear slope describes the maximal achievable operating points at nominal voltage.
Any points of operation above this linear slope will require a supply voltage $U_{mot} > U_N$.

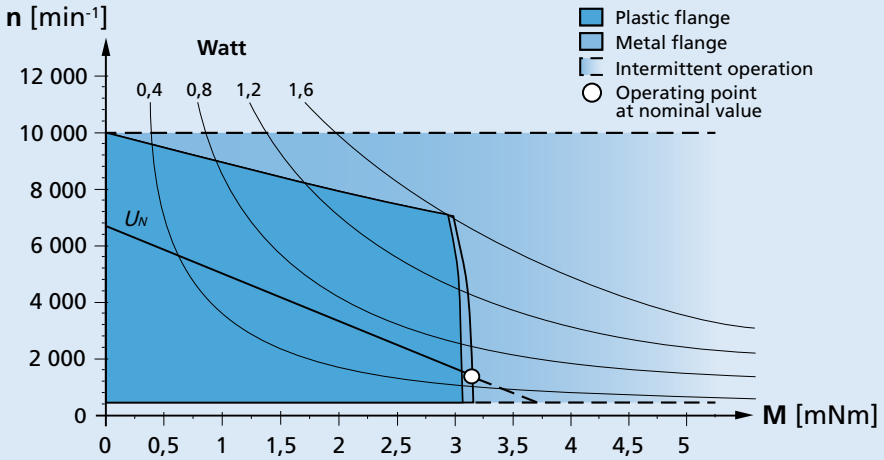

Recommended operation areas (example: nominal voltage 12V)

© DR. FRITZ FAULHABER GMBH & CO. KG
Specifications subject to change without notice.

Dimensional drawing

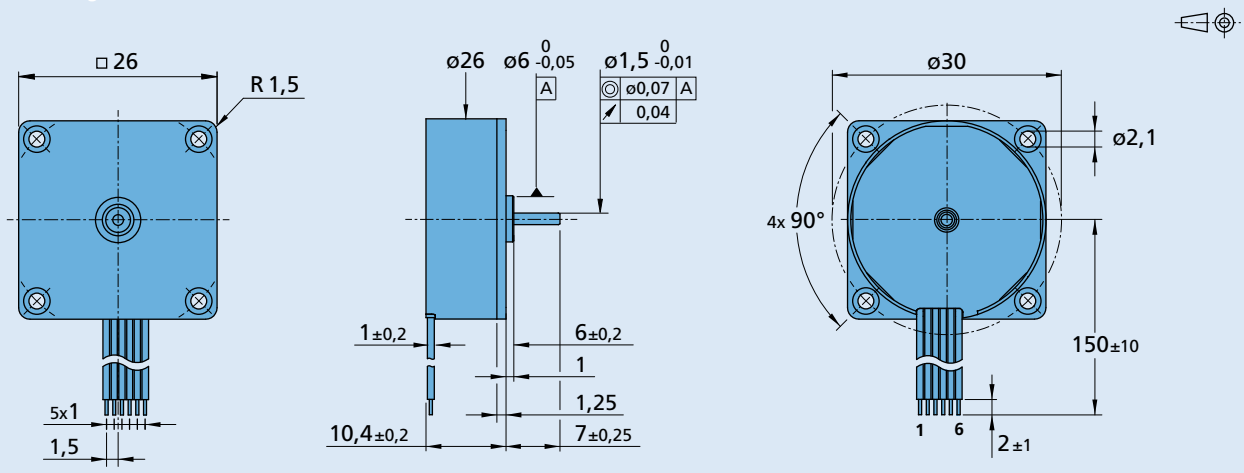

2610 T ... B SC

Option, cable and connection information

Example product designation: **2610T012BSC-4257**

Option	Type	Description
4257	Connector 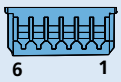	AWG 28 / PVC ribbon cable with connector Picoblade

Connection

Name	Function	Inputs-outputs	Description
1	*UP*	power supply electronic	4 ... 18 V DC
2	*Umot*	power supply motor	1,7 ... 18 V DC
3	GND	ground	
4	*Unsoll*	input voltage input resistance set speed value	*Uin* = 0 ... 10 V | > 10 V ... *UP* » set speed value not defined *Rin* ≥ 8,9 kΩ per 1 V , 1 000 min^{-1} *Uin* < 0,15 V » motor stops *Uin* > 0,3 V » motor starts
5	DIR	direction of rotation input resistance	to ground or *U* < 0,5 V » counterclockwise open or level > 3 V » clockwise *Rin* ≥ 10 kΩ
6	FG	frequency output	max. *UP*; *Imax* = 15 mA; open collector with 22 kΩ pull-up resistor 6 lines per revolution

Standard cable
PVC ribbon cable 6 x AWG 28, 1 mm

Note: For details on the connection assignment, see device manual for the SCS.

Product combination

Precision Gearheads / Lead Screws	Encoders	Drive Electronics	Cables / Accessories
		Integrated	To view our large range of accessory parts, please refer to the "Accessories" chapter.

© DR. FRITZ FAULHABER GMBH & CO. KG
Specifications subject to change without notice.

Brushless DC-Gearmotors 100 mNm

with integrated Speed Controller

2622 ... B SC

Values at 22°C and nominal voltage	2622 S		006 B SC	012 B SC	
Power supply for electronic	U_P		4 ... 18	4 ... 18	V DC
Power supply for motor	U_{mot}		1,7 ... 18	1,7 ... 18	V DC
Nominal voltage for motor	U_n		6	12	V
No-load speed (at U_N)	n_o		6 700	6 650	min^{-1}
Torque constant	k_M		9,05	18,1	mNm/A
PWM switching frequency	f_{PWM}		96	96	kHz
Efficiency electronic	η		95	95	%
Standby current for electronic (at U_N)	I_{el}		0,02	0,02	A
Housing material		plastic			
Geartrain material		metal			
Backlash, at no-load		≤ 4			°
Bearings on output shaft		ball bearing			
Shaft load max.:					
– radial (5 mm from mounting face)		15			N
– axial		5			N
Shaft press fit force, max.		10			N
Shaft play:					
– radial (5 mm from mounting face)		≤ 0,03			mm
– axial		≤ 0,25			mm
Operating temperature range		– 25 ... + 80			°C

Range of functions	... SC
Configuration from Motion Manager 5.0	via USB Programming Adapter
Operating modes	Integrated speed control via PI controller and external set value specification; commutation via digital Hall sensors. Can optionally be operated in voltage controller mode or fixed speed mode.
Additional functions	Integrated current limitation to protect against thermal overload. Short-time operation (S2) with up to double the continuous current. Separate voltage supply for motor and electronics. Direction of rotation changeover through separate switching input; reading of speed signal via frequency output.

Specifications

reduction ratio (rounded)	output speed up to n_{max} min^{-1}	weight with motor g	output torque continuous operation M_{max} mNm	output torque intermittent operation M_{max} mNm	direction of rotation (reversible)	efficiency %
8 : 1	635	25	7	38	=	81
22 : 1	223	26	18	98	≠	73
33 : 1	151	26	22	119	=	60
112 : 1	44	27	73	180	≠	59
207 : 1	24	27	100	180	=	53
361 : 1	14	27	100	180	=	53
814 : 1	6	28	100	180	=	43
1 257 : 1	4	29	100	180	=	43

Note: output speed at 5000 min^{-1} input speed. Based on motor 2610 ... B SC.

© DR. FRITZ FAULHABER GMBH & CO. KG
Specifications subject to change without notice.
www.faulhaber.com

Dimensional drawing

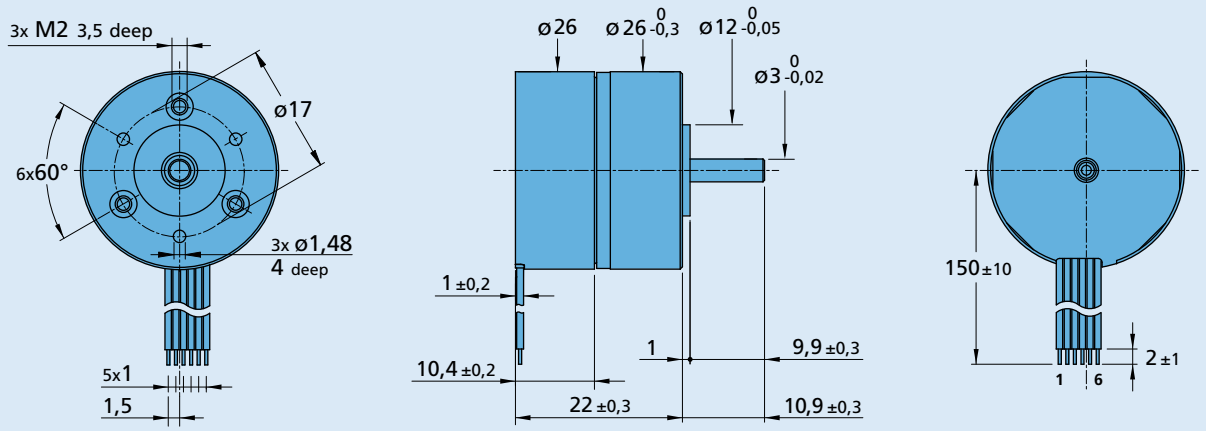

2622 S ... B SC

Option, cable and connection information

Example product designation: **2622S012BSC22:1-4257**

Option	Type	Description
4257	Connector 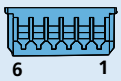	AWG 28 / PVC ribbon cable with connector Picoblade

Connection

Name	Function	Inputs-outputs	Description
1	*UP*	power supply electronic	4 ... 18 V DC
2	*Umot*	power supply motor	1,7 ... 18 V DC
3	GND	ground	
4	*Unsoll*	input voltage input resistance set speed value	*Uin* = 0 ... 10 V | > 10 V ... *UP* » set speed value not defined *Rin* ≥ 8,9 kΩ per 1 V , 1 000 min^{-1} *Uin* < 0,15 V » motor stops *Uin* > 0,3 V » motor starts
5	DIR	direction of rotation input resistance	to ground or *U* < 0,5 V » counterclockwise *U* > 3 V » clockwise *Rin* ≥ 10 kΩ
6	FG	frequency output	max. *UP*; *Imax* = 15 mA; open collector with 22 kΩ pull-up resistor 6 lines per revolution

Standard cable
PVC ribbon cable 6 x AWG 28, 1 mm

Note: For details on the connection assignment, see device manual for the SCS.

Product combination

Precision Gearheads	Encoders	Drive Electronics	Cables / Accessories
Integrated		Integrated	To view our large range of accessory parts, please refer to the "Accessories" chapter.

© DR. FRITZ FAULHABER GMBH & CO. KG
Specifications subject to change without notice.
www.faulhaber.com

FAULHABER IMC

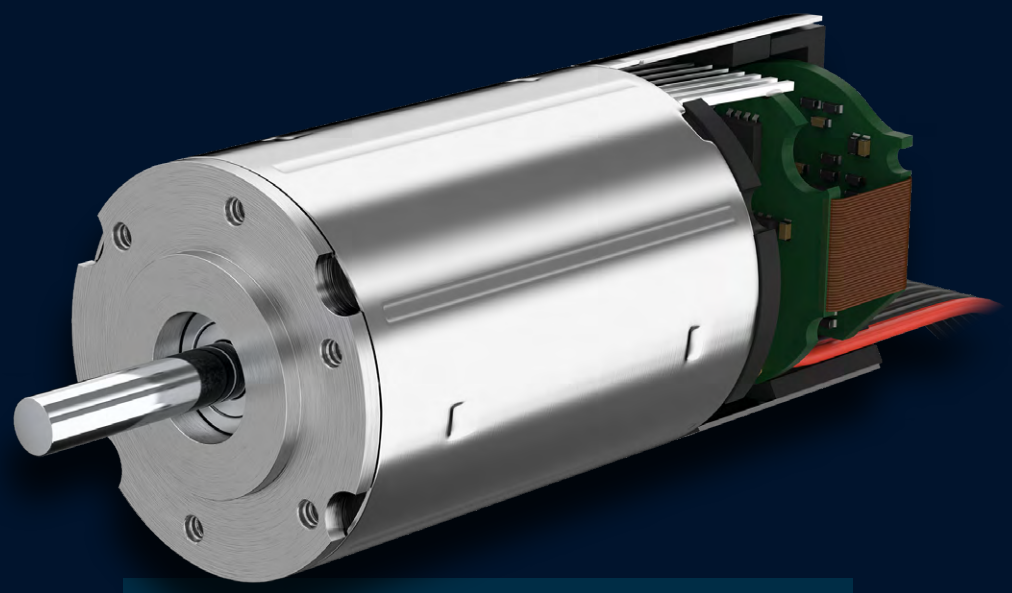

FAULHABER IMC

2232...BX4 IMC RS/CO	with integrated MC	18 mNm
2250...BX4 IMC RS/CO	with integrated MC	27 mNm

Backwards

NEW

FAULHABER

Motion Control Systems

18 mNm

V3.0, 4-Quadrant PWM
with RS232 or CANopen interface

10,5 W

2232 ... BX4 IMC RS/CO

Values at 22°C and nominal voltage	2232 S		012 BX4 IMC ...	024 BX4 IMC ...	
Power supply electronic	U_P/U_B		6 ... 30	6 ... 30	V DC
Power supply motor[1)]	U_{Mot}		6 ... 30	6 ... 30	V DC
Nominal voltage for motor	U_N		12	24	V
No-load speed (at U_N)	n_0		6 300	6 700	min^{-1}
Peak torque (S2 operation for max. 30s)	$M_{max.}$		36	36	mNm
Torque constant	k_M		17	32,4	mNm/A
PWM switching frequency	f_{PWM}		80	80	kHz
Efficiency electronic	η		95	95	%
Standby current for electronic (@ U_P=24V)	I_{el}		0,027	0,027	A
Speed range (up to 24V / 30V)			1 ... 13 000	1 ... 8 500	min^{-1}
Shaft bearings		ball bearings, preloaded			
Shaft load max.:					
– with shaft diameter		3			mm
– radial at 3 000 min^{-1} (5 mm from mounting flange)		20			N
– axial at 3 000 min^{-1} (push / pull)		2			N
– axial at standstill (push / pull)		20			N
Shaft play:					
– radial		≤ 0,015			mm
– axial		= 0			mm
Operating temperature range		-40 ... +100			°C
Housing material		stainless steel			
Mass		77			g

[1)] Not available with option 7431 (common power supply)

Rated values for continuous operation					
Rated torque	M_N		18	18	mNm
Rated current (thermal limit)	I_N		1,16	0,62	A
Rated speed	n_N		3 500	4 000	min^{-1}

Note: Rated values are calculated with nominal voltage and at a 22°C ambient temperature. Mounted on metal flange.

Interface / range of functions	... RS	... CO
Configuration from Motion Manager 7	RS232	CANopen
Fieldbus	RS232	CANopen
Operating modes	PP, PV, PT, CSP, CSV, CST and homing acc. to IEC 61800-7-201 or IEC 61800-7-301 as well as position-, speed- and torque control via analog setpoint or voltage controller	
Speed range	see motor diagram	
Application programs	Max. 8 application programs (BASIC), one of which is an autostart function	
Additional functions	Touch-probe input, connection of a second incremental encoder	

Note:
The display shows the range of possible operation points of the drives at a given ambient temperature of 22°C.

The diagram indicates the recommended speed in relation to the available torque at the output shaft.
It includes the assembly on a plastic- as well as on a metal flange (assembly method: IM B 5).

The nominal voltage linear slope describes the maximal achievable operating points at nominal voltage.
Any points of operation above this linear slope will require a supply voltage $U_{Mot} > U_N$.

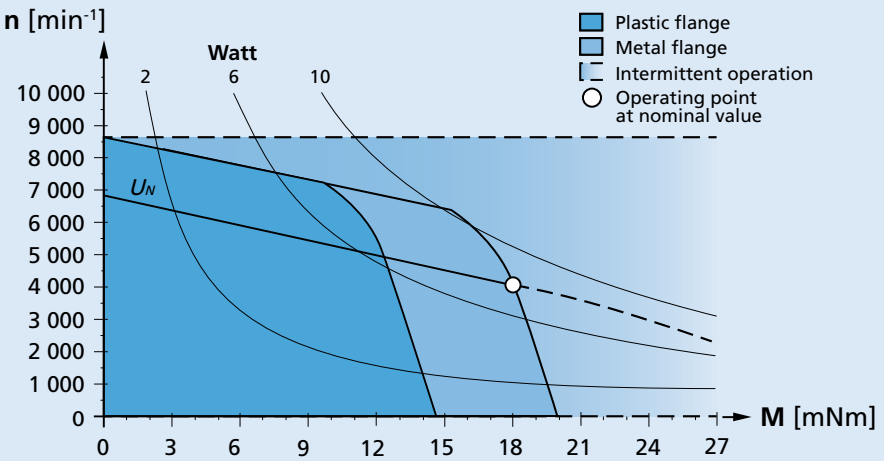

Recommended operation areas (example: nominal voltage 24V)

For notes on technical data and lifetime performance refer to "Technical Information".

Edition 2024 Feb. 29

Backwards

© DR. FRITZ FAULHABER GMBH & CO. KG
Specifications subject to change without notice.

www.faulhaber.com

Dimensional drawing

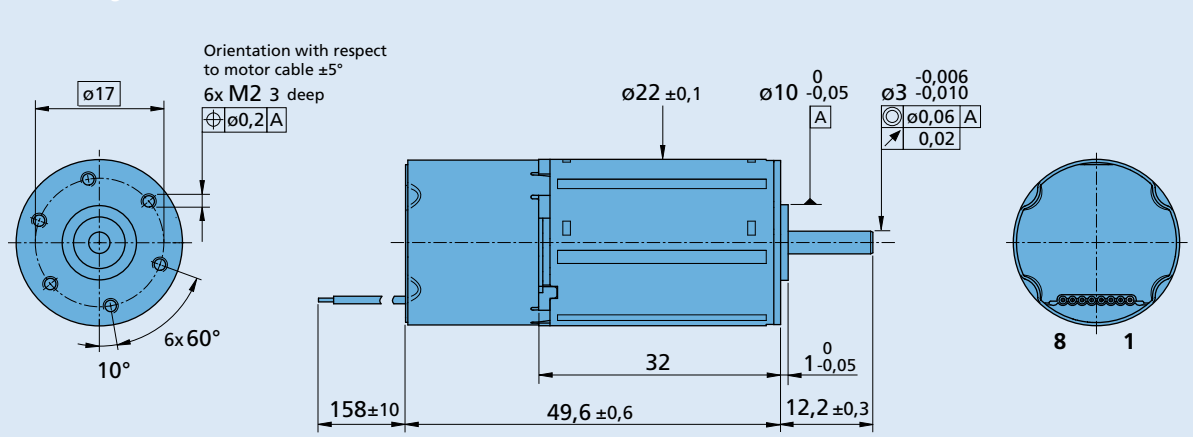

2232 ... BX4 IMC RS/CO

Option, cable and connection information

Example product designation: **2232S024BX4 IMC CO 7431**

Option	Type	Description
3830	Connector	AWG 26 / PVC ribbon cable with connector MOLEX Microfit 3.0, 43025-0800, recommended mating connector 43020-0800
7431	Supply	Common voltage supply for motor and electronics
7630	I/O	AnIn1 ±10V (without DigOut2)

Connection Standard

No.	Function
1	U_P
2	U_{Mot}
3	GND
4	DigIn1 / DigOut2 / AnIn1
5	DigIn2 / AGND
6	DigIn3 / DigOut1
7	RS232 RXD / CAN_L
8	RS232 TXD / CAN_H

Option: 7431

No.	Function
1	AnIn2
2	U_B
3	GND
4	DigIn1 / DigOut2 / AnIn1
5	DigIn2 / AGND
6	DigIn3 / DigOut1
7	RS232 RXD / CAN_L
8	RS232 TXD / CAN_H

Standard cable
PVC ribbon cable 8 x AWG 26, 1,27 mm

Note: For details on the connection assignment, see device manual IMC.

Product combination

Precision Gearheads / Lead Screws	Encoders	Drive Electronics	Cables / Accessories
22GPT 22/7 26A 22L ... ML 22L ... SB 22L ... PB		Integrated	To view our large range of accessory parts, please refer to the "Accessories" chapter.

© DR. FRITZ FAULHABER GMBH & CO. KG
Specifications subject to change without notice.

NEW

FAULHABER

Motion Control Systems

27 mNm

V3.0, 4-Quadrant PWM
with RS232 or CANopen interface

15,1 W

2250 ... BX4 IMC RS/CO

Values at 22°C and nominal voltage	2250 S		012 BX4 IMC ...	024 BX4 IMC ...	
Power supply electronic	U_P/U_B		6 ... 30	6 ... 30	V DC
Power supply motor[1)]	U_{Mot}		6 ... 30	6 ... 30	V DC
Nominal voltage for motor	U_N		12	24	V
No-load speed (at U_N)	n_0		5 650	5 900	min^{-1}
Peak torque (S2 operation for max. 70s)	$M_{max.}$		54	54	mNm
Torque constant	k_M		19	36,9	mNm/A
PWM switching frequency	f_{PWM}		80	80	kHz
Efficiency electronic	η		95	95	%
Standby current for electronic (@ U_P=24V)	I_{el}		0,027	0,027	A
Speed range (up to 24V / 30V)			1 ... 10 500	1 ... 7 500	min^{-1}
Shaft bearings		ball bearings, preloaded			
Shaft load max.:					
– with shaft diameter		3			mm
– radial at 3 000 min^{-1} (5 mm from mounting flange)		20			N
– axial at 3 000 min^{-1} (push / pull)		2			N
– axial at standstill (push / pull)		20			N
Shaft play:					
– radial		≤ 0,015			mm
– axial		= 0			mm
Operating temperature range		-40 ... +100			°C
Housing material		stainless steel			
Mass		117			g

[1)] Not available with option 7431 (common power supply)

Rated values for continuous operation					
Rated torque	M_N		27	27	mNm
Rated current (thermal limit)	I_N		1,6	0,86	A
Rated speed	n_N		3 900	4 400	min^{-1}

Note: Rated values are calculated with nominal voltage and at a 22°C ambient temperature. Mounted on metal flange.

Interface / range of functions	... RS	... CO
Configuration from Motion Manager 7	RS232	CANopen
Fieldbus	RS232	CANopen
Operating modes	PP, PV, PT, CSP, CSV, CST and homing acc. to IEC 61800-7-201 or IEC 61800-7-301 as well as position-, speed- and torque control via analog setpoint or voltage controller	
Speed range	see motor diagram	
Application programs	Max. 8 application programs (BASIC), one of which is an autostart function	
Additional functions	Touch-probe input, connection of a second incremental encoder	

Note:
The display shows the range of possible operation points of the drives at a given ambient temperature of 22°C.

The diagram indicates the recommended speed in relation to the available torque at the output shaft.
It includes the assembly on a plastic- as well as on a metal flange (assembly method: IM B 5).

The nominal voltage linear slope describes the maximal achievable operating points at nominal voltage.
Any points of operation above this linear slope will require a supply voltage $U_{Mot} > U_N$.

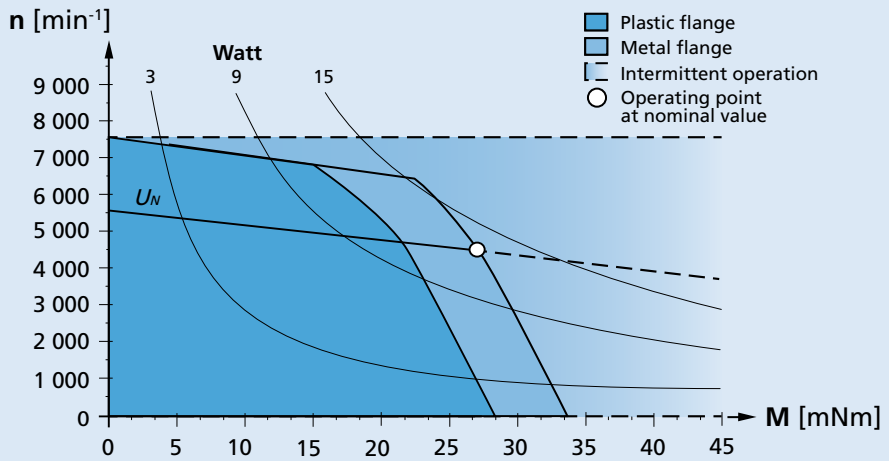

Recommended operation areas (example: nominal voltage 24V)

For notes on technical data and lifetime performance refer to "Technical Information".

Edition 2024 Feb. 29

Backwards

© DR. FRITZ FAULHABER GMBH & CO. KG
Specifications subject to change without notice.

www.faulhaber.com

Dimensional drawing

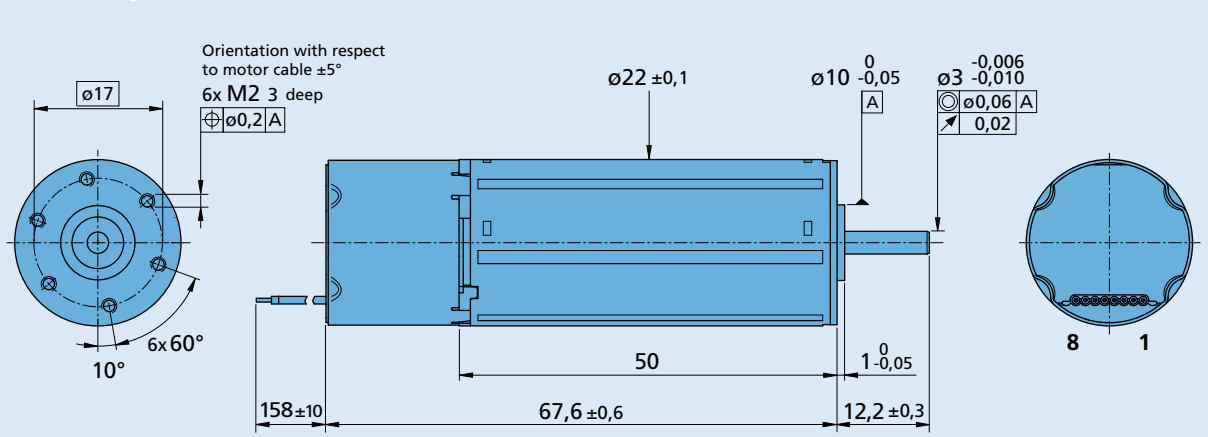

2250 ... BX4 IMC RS/CO

Option, cable and connection information

Example product designation: **2250S024BX4 IMC CO 7431**

Option	Type	Description
3830	Connector	AWG 26 / PVC ribbon cable with connector MOLEX Microfit 3.0, 43025-0800, recommended mating connector 43020-0800
7431	Supply	Common voltage supply for motor and electronics
7630	I/O	AnIn1 ±10V (without DigOut2)

Connection Standard

No.	Function
1	U_P
2	U_{Mot}
3	GND
4	DigIn1 / DigOut2 / AnIn1
5	DigIn2 / AGND
6	DigIn3 / DigOut1
7	RS232 RXD / CAN_L
8	RS232 TXD / CAN_H

Option: 7431

No.	Function
1	AnIn2
2	U_B
3	GND
4	DigIn1 / DigOut2 / AnIn1
5	DigIn2 / AGND
6	DigIn3 / DigOut1
7	RS232 RXD / CAN_L
8	RS232 TXD / CAN_H

Standard cable
PVC ribbon cable 8 x AWG 26, 1,27 mm

Note: For details on the connection assignment, see device manual IMC.

Product combination

Precision Gearheads / Lead Screws	Encoders	Drive Electronics	Cables / Accessories
22GPT 22/7 26A 32GPT 22L ... ML 22L ... SB 22L ... PB 32L ... TL 32L ... ML 32L ... SB 32L ... PB		Integrated	To view our large range of accessory parts, please refer to the "Accessories" chapter.

© DR. FRITZ FAULHABER GMBH & CO. KG
Specifications subject to change without notice.

FAULHABER MCS

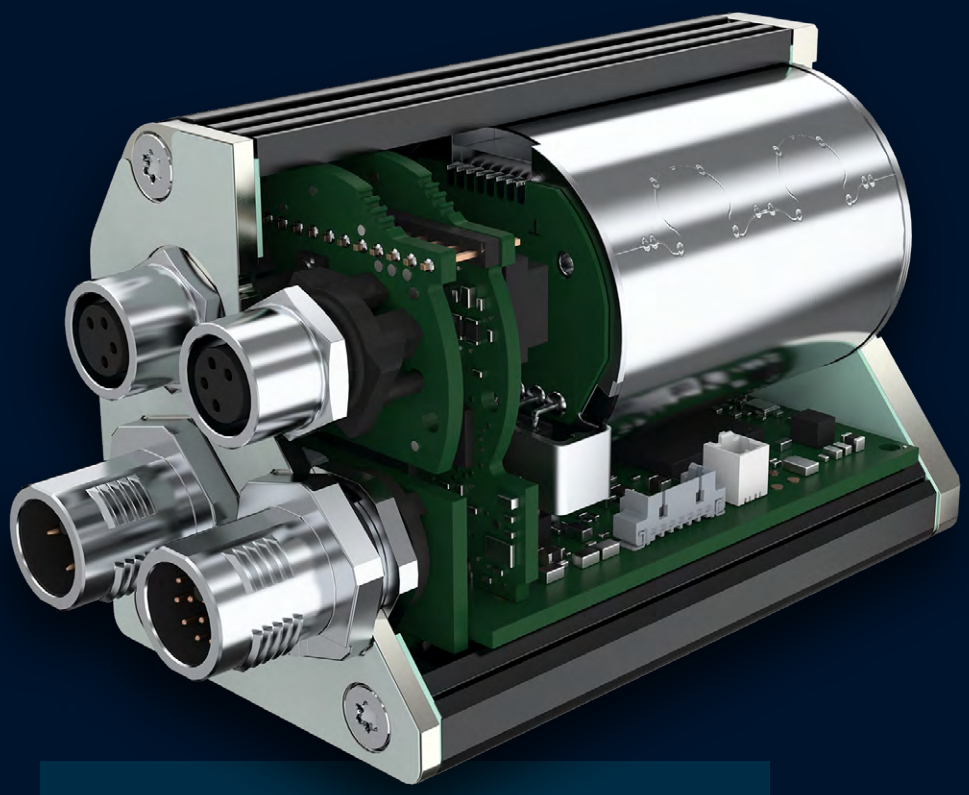

FAULHABER MCS

MCS 3242...BX4 RS/CO	with integrated MC	76 mNm
MCS 3242...BX4 ET	with integrated MC	76 mNm
MCS 3268...BX4 RS/CO	with integrated MC	96 mNm
MCS 3268...BX4 ET	with integrated MC	96 mNm
MCS 3274...BP4 RS/CO	with integrated MC	160 mNm
MCS 3274...BP4 ET	with integrated MC	160 mNm

Backwards

Motion Control Systems

76 mNm

V3.0, 4-Quadrant PWM
with RS232 or CANopen interface

32 W

MCS 3242 ... BX4 RS/CO

Values at 22°C and nominal voltage	MCS 3242G		024BX4 RS/CO	
Power supply electronic	U_P		12 ... 50	V DC
Power supply motor	U_{mot}		0 ... 50	V DC
Nominal voltage for motor	U_N		24	V
No-load speed (at U_N)	n_0		4 900	min^{-1}
Peak torque (S2 operation for max. 14s)	$M_{max.}$		150	mNm
Torque constant	k_M		41,4	mNm/A
PWM switching frequency	f_{PWM}		100	kHz
Efficiency electronic	η		95	%
Standby current for electronic (@ U_P=24V)	I_{el}		0,06	A
Speed range (up to 30V)			1 ... 6 200	min^{-1}
Shaft bearings		ball bearings, preloaded		
Shaft load max.:				
– with shaft diameter		5		mm
– radial at 3 000 min^{-1} (5 mm from mounting flange)		50		N
– axial at 3 000 min^{-1} (push / pull)		5		N
– axial at standstill (push / pull)		50		N
Shaft play:				
– radial		≤ 0,015		mm
– axial		= 0		mm
Operating temperature range		-40 ... +100		°C
Housing material		aluminium, stainless steel		
Protection class, with option V ring		IP54		
Mass		340		g

Rated values for continuous operation				
Rated torque	M_N		76	mNm
Rated current (thermal limit)	I_N		1,82	A
Rated speed	n_N		2 800	min^{-1}

Interface / range of functions	... RS	... CO
Configuration from Motion Manager 6.0	RS232	CANopen
Fieldbus	RS232	CANopen
Operating modes	PP, PV, PT, CSP, CSV, CST and homing acc. to IEC 61800-7-201 or IEC 61800-7-301 as well as position-, speed- and torque control via analog setpoint or voltage controller	
Speed range	see motor diagram	
Application programs	Max. 8 application programs (BASIC), one of which is an autostart function	
Additional functions	Touch-probe input, connection of a second incremental encoder, control of a holding brake	
Indicator	LEDs for displaying the operating state Trace as recorder (scope function) or logger	

Note:

The display shows the range of possible operation points of the drives at a given ambient temperature of 22°C.

The diagram indicates the recommended speed in relation to the available torque at the output shaft.
It includes the assembly on a plastic- as well as on a metal flange (assembly method: IM B 5).

The nominal voltage linear slope describes the maximal achievable operating points at nominal voltage.
Any points of operation above this linear slope will require a supply voltage $U_{mot} > U_N$.

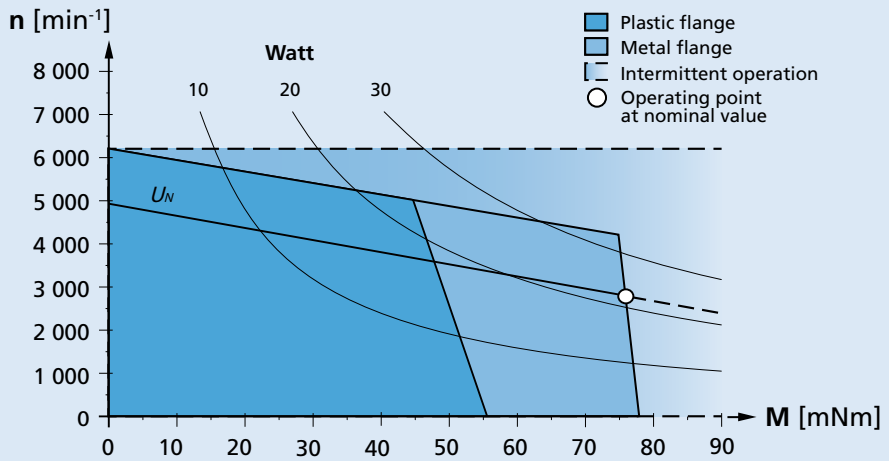

Recommended operation areas (example: nominal voltage 24V)

For notes on technical data and lifetime performance refer to "Technical Information".

Edition 2023 Mar. 31

Backwards

© DR. FRITZ FAULHABER GMBH & CO. KG
Specifications subject to change without notice.

Dimensional drawing

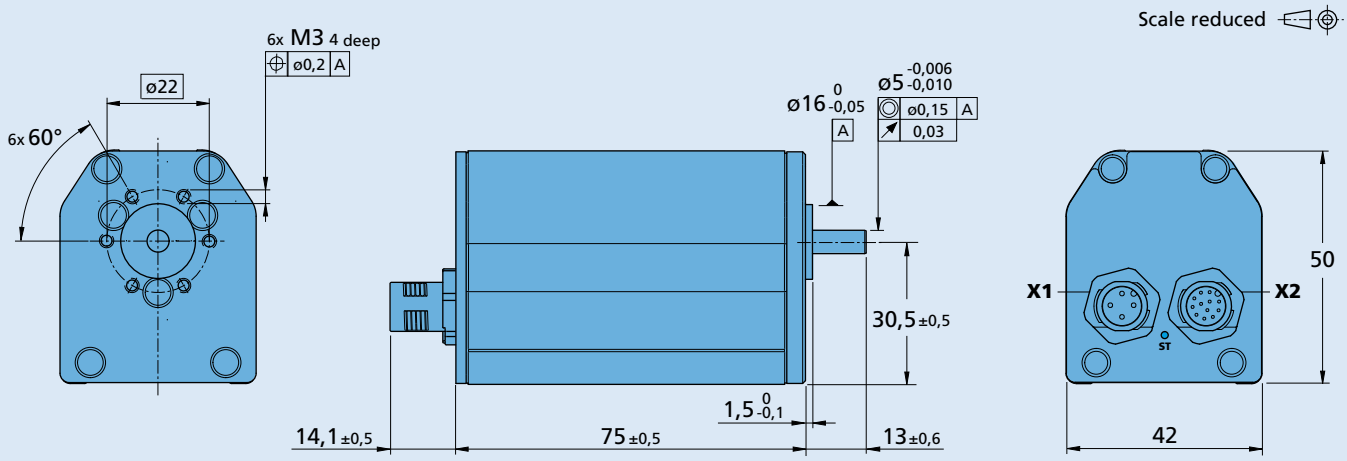

MCS 3242 G ... BX4 RS/CO

Option, cable and connection information

Example product designation: **MCS3242G024BX4RS-5453**

Option	Type	Description
5451	Cable outlet	Radial via bottom plate
5452	Shaft seal	For use with oil emulsive substances
5453	Shaft seal	IP54 according to IEC 60529
5657	Motor flange seal	IP54 according to IEC 60529

Connection

Name	Function	Inputs-outputs	Description
X1	Motor and electronic power supply		
X2	Inputs / outputs	DigIn1, DigIn2, DigIn3 DigOut1, DigOut2 AnIn1, AnIn2 U_{out} / GND	TTL or. PLC level max. 0,7A continuous current ± 10V against AGND 5V

Note: For details on the connection assignment, see device manual for the MCS.

Product combination

Precision Gearheads / Lead Screws	Encoders	Drive Electronics	Cables / Accessories
32GPT 32/3R 42GPT 32L ... TL 32L ... ML 32L ... SB 32L ... PB		Integrated	To view our large range of accessory parts, please refer to the "Accessories" chapter.

© DR. FRITZ FAULHABER GMBH & CO. KG
Specifications subject to change without notice.

Motion Control Systems

76 mNm

V3.0, 4-Quadrant PWM
with EtherCAT interface

32 W

MCS 3242 ... BX4 ET

Values at 22°C and nominal voltage	MCS 3242G		024BX4 ET	
Power supply electronic	U_P		12 ... 50	V DC
Power supply motor	U_{mot}		0 ... 50	V DC
Nominal voltage for motor	U_N		24	V
No-load speed (at U_N)	n_0		4 900	min^{-1}
Peak torque (S2 operation for max. 14s)	$M_{max.}$		150	mNm
Torque constant	k_M		41,4	mNm/A
PWM switching frequency	f_{PWM}		100	kHz
Efficiency electronic	η		95	%
Standby current for electronic (@ U_P=24V)	I_{el}		0,06	A
Speed range (up to 30V)			1 ... 6 200	min^{-1}
Shaft bearings		ball bearings, preloaded		
Shaft load max.:				
– with shaft diameter		5		mm
– radial at 3 000 min^{-1} (5 mm from mounting flange)		50		N
– axial at 3 000 min^{-1} (push / pull)		5		N
– axial at standstill (push / pull)		50		N
Shaft play:				
– radial		≤ 0,015		mm
– axial		= 0		mm
Operating temperature range		-40 ... +85		°C
Housing material		aluminium, stainless steel		
Protection class, with option V ring		IP54		
Mass		356		g

Rated values for continuous operation				
Rated torque	M_N		76	mNm
Rated current (thermal limit)	I_N		1,82	A
Rated speed	n_N		2 800	min^{-1}

Interface / range of functions	... ET
Configuration from Motion Manager 6.0	RS232
Fieldbus	EtherCAT
Operating modes	PP, PV, PT, CSP, CSV, CST and homing acc. to IEC 61800-7-201 or IEC 61800-7-301 as well as position-, speed- and torque control via analog setpoint or voltage controller
Speed range	see motor diagram
Application programs	Max. 8 application programs (BASIC), one of which is an autostart function
Additional functions	Touch-probe input, connection of a second incremental encoder, control of a holding brake
Indicator	LEDs for displaying the operating state Trace as recorder (scope function) or logger

Note:

The display shows the range of possible operation points of the drives at a given ambient temperature of 22°C.

The diagram indicates the recommended speed in relation to the available torque at the output shaft.
It includes the assembly on a plastic- as well as on a metal flange (assembly method: IM B 5).

The nominal voltage linear slope describes the maximal achievable operating points at nominal voltage.
Any points of operation above this linear slope will require a supply voltage $U_{mot} > U_N$.

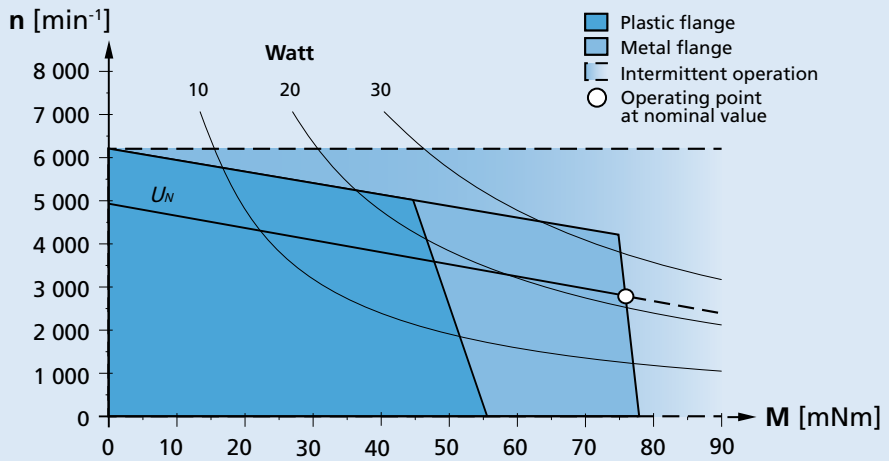

Recommended operation areas (example: nominal voltage 24V)

For notes on technical data and lifetime performance refer to "Technical Information".

Backwards

© DR. FRITZ FAULHABER GMBH & CO. KG
Specifications subject to change without notice.

Dimensional drawing

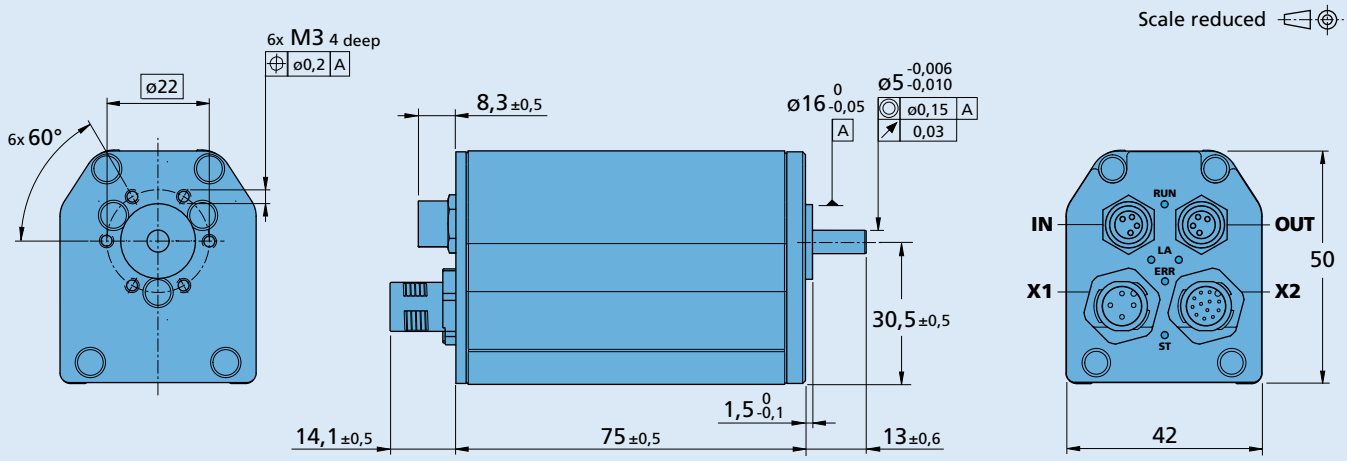

MCS 3242 G ... BX4 ET

Option, cable and connection information

Example product designation: **MCS3242G024BX4ET-5453**

Option	Type	Description
5452	Shaft seal	For use with oil emulsive substances
5453	Shaft seal	IP54 according to IEC 60529
5657	Motor flange seal	IP54 according to IEC 60529

Connection

Name	Function	Inputs-outputs	Description
X1	Motor and electronic power supply		
X2	Inputs-outputs	DigIn1, DigIn2, DigIn3 DigOut1, DigOut2 AnIn1, AnIn2 U_{out} / GND	TTL or. PLC level max. 0,7A continuous current ± 10V against AGND 5V
IN	Fieldbus		EtherCAT IN
OUT	Fieldbus		EtherCAT OUT

Note: For details on the connection assignment, see device manual for the MCS.

Product combination

Precision Gearheads / Lead Screws	Encoders	Drive Electronics	Cables / Accessories
32GPT 32/3R 42GPT 32L ... TL 32L ... ML 32L ... SB 32L ... PB		Integrated	To view our large range of accessory parts, please refer to the "Accessories" chapter.

© DR. FRITZ FAULHABER GMBH & CO. KG
Specifications subject to change without notice.

Motion Control Systems

96 mNm

V3.0, 4-Quadrant PWM
with RS232 or CANopen interface

41 W

MCS 3268 ... BX4 RS/CO

Values at 22°C and nominal voltage	MCS 3268G		024BX4 RS/CO	
Power supply electronic	U_P		12 ... 50	V DC
Power supply motor	U_{mot}		0 ... 50	V DC
Nominal voltage for motor	U_N		24	V
No-load speed (at U_N)	n_0		4 700	min^{-1}
Peak torque (S2 operation for max. 150s)	$M_{max.}$		190	mNm
Torque constant	k_M		43,5	mNm/A
PWM switching frequency	f_{PWM}		100	kHz
Efficiency electronic	η		95	%
Standby current for electronic (@ U_P=24V)	I_{el}		0,06	A
Speed range (up to 30V)			1 ... 6 000	min^{-1}
Shaft bearings		ball bearings, preloaded		
Shaft load max.:				
– with shaft diameter		5		mm
– radial at 3 000 min^{-1} (5 mm from mounting flange)		50		N
– axial at 3 000 min^{-1} (push / pull)		5		N
– axial at standstill (push / pull)		50		N
Shaft play:				
– radial		≤ 0,015		mm
– axial		= 0		mm
Operating temperature range		-40 ... +100		°C
Housing material		aluminium, stainless steel		
Protection class, with option V ring		IP54		
Mass		378		g

Rated values for continuous operation				
Rated torque	M_N		96	mNm
Rated current (thermal limit)	I_N		2,3	A
Rated speed	n_N		3 700	min^{-1}

Interface / range of functions	... RS	... CO
Configuration from Motion Manager 6.0	RS232	CANopen
Fieldbus	RS232	CANopen
Operating modes	PP, PV, PT, CSP, CSV, CST and homing acc. to IEC 61800-7-201 or IEC 61800-7-301 as well as position-, speed- and torque control via analog setpoint or voltage controller	
Speed range	see motor diagram	
Application programs	Max. 8 application programs (BASIC), one of which is an autostart function	
Additional functions	Touch-probe input, connection of a second incremental encoder, control of a holding brake	
Indicator	LEDs for displaying the operating state Trace as recorder (scope function) or logger	

Note:

The display shows the range of possible operation points of the drives at a given ambient temperature of 22°C.

The diagram indicates the recommended speed in relation to the available torque at the output shaft.
It includes the assembly on a plastic- as well as on a metal flange (assembly method: IM B 5).

The nominal voltage linear slope describes the maximal achievable operating points at nominal voltage.
Any points of operation above this linear slope will require a supply voltage $U_{mot} > U_N$.

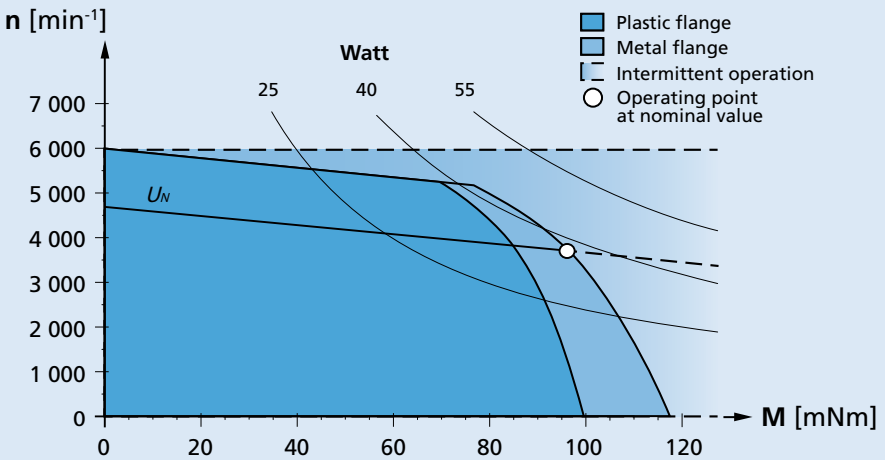

Recommended operation areas (example: nominal voltage 24V)

For notes on technical data and lifetime performance refer to "Technical Information".

Edition 2023 Mar. 31

Backwards

© DR. FRITZ FAULHABER GMBH & CO. KG
Specifications subject to change without notice.

www.faulhaber.com

Dimensional drawing

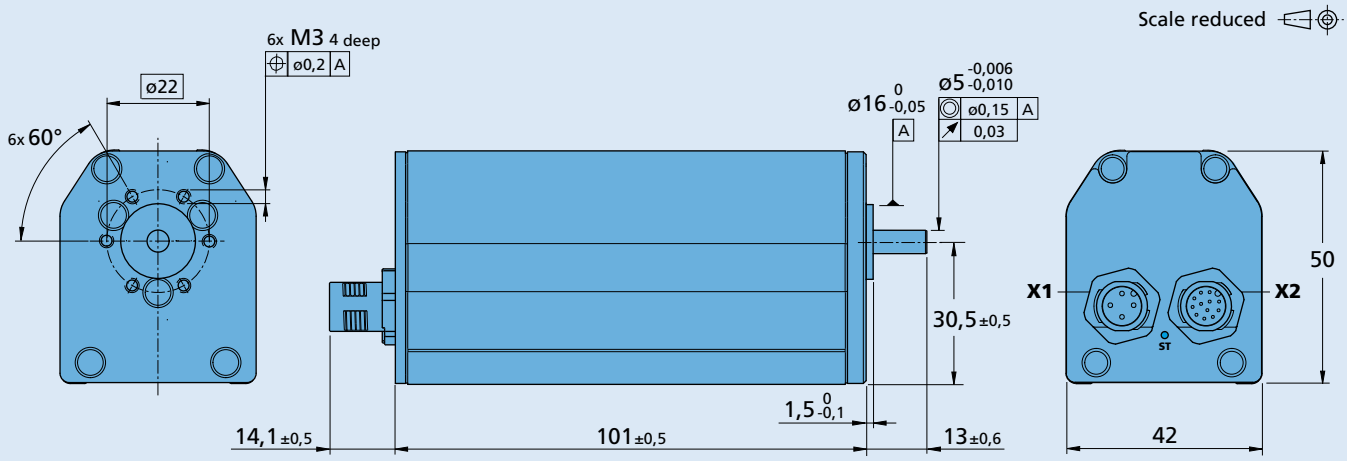

MCS 3268 G ... BX4 RS/CO

Option, cable and connection information

Example product designation: **MCS3268G024BX4RS-5453**

Option	Type	Description
5451	Cable outlet	Radial via bottom plate
5452	Shaft seal	For use with oil emulsive substances
5453	Shaft seal	IP54 according to IEC 60529
5657	Motor flange seal	IP54 according to IEC 60529

Connection

Name	Function	Inputs-outputs	Description
X1	Motor and electronic power supply		
X2	Inputs / outputs	DigIn1, DigIn2, DigIn3 DigOut1, DigOut2 AnIn1, AnIn2 U_{out} / GND	TTL or. PLC level max. 0,7A continuous current ± 10V against AGND 5V

Note: For details on the connection assignment, see device manual for the MCS.

Product combination

Precision Gearheads / Lead Screws	Encoders	Drive Electronics	Cables / Accessories
32GPT 32/3R 42GPT 32L ... TL 32L ... ML 32L ... SB 32L ... PB		Integrated	To view our large range of accessory parts, please refer to the "Accessories" chapter.

© DR. FRITZ FAULHABER GMBH & CO. KG
Specifications subject to change without notice.

Motion Control Systems

V3.0, 4-Quadrant PWM
with EtherCAT interface

96 mNm
41 W

MCS 3268 ... BX4 ET

Values at 22°C and nominal voltage	MCS 3268G		024BX4 ET	
Power supply electronic	U_P		12 ... 50	V DC
Power supply motor	U_{mot}		0 ... 50	V DC
Nominal voltage for motor	U_N		24	V
No-load speed (at U_N)	n_0		4 700	min^{-1}
Peak torque (S2 operation for max. 150s)	$M_{max.}$		190	mNm
Torque constant	k_M		43,5	mNm/A
PWM switching frequency	f_{PWM}		100	kHz
Efficiency electronic	η		95	%
Standby current for electronic (@ U_P=24V)	I_{el}		0,06	A
Speed range (up to 30V)			1 ... 6 000	min^{-1}
Shaft bearings		ball bearings, preloaded		
Shaft load max.:				
– with shaft diameter		5		mm
– radial at 3 000 min^{-1} (5 mm from mounting flange)		50		N
– axial at 3 000 min^{-1} (push / pull)		5		N
– axial at standstill (push / pull)		50		N
Shaft play:				
– radial		≤ 0,015		mm
– axial		= 0		mm
Operating temperature range		-40 ... +85		°C
Housing material		aluminium, stainless steel		
Protection class, with option V ring		IP54		
Mass		394		g

Rated values for continuous operation				
Rated torque	M_N		96	mNm
Rated current (thermal limit)	I_N		2,3	A
Rated speed	n_N		3 700	min^{-1}

Interface / range of functions	... ET
Configuration from Motion Manager 6.0	RS232
Fieldbus	EtherCAT
Operating modes	PP, PV, PT, CSP, CSV, CST and homing acc. to IEC 61800-7-201 or IEC 61800-7-301 as well as position-, speed- and torque control via analog setpoint or voltage controller
Speed range	see motor diagram
Application programs	Max. 8 application programs (BASIC), one of which is an autostart function
Additional functions	Touch-probe input, connection of a second incremental encoder, control of a holding brake
Indicator	LEDs for displaying the operating state Trace as recorder (scope function) or logger

Note:
The display shows the range of possible operation points of the drives at a given ambient temperature of 22°C.

The diagram indicates the recommended speed in relation to the available torque at the output shaft.
It includes the assembly on a plastic- as well as on a metal flange (assembly method: IM B 5).

The nominal voltage linear slope describes the maximal achievable operating points at nominal voltage.
Any points of operation above this linear slope will require a supply voltage $U_{mot} > U_N$.

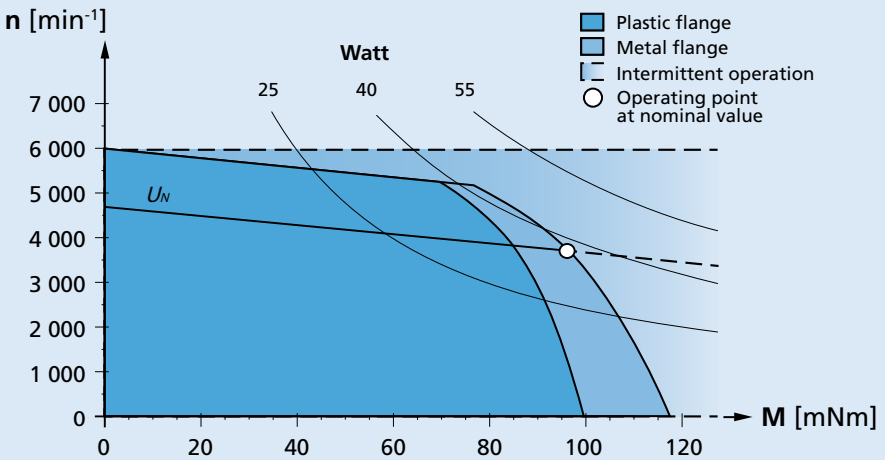

Recommended operation areas (example: nominal voltage 24V)

For notes on technical data and lifetime performance refer to "Technical Information".

Edition 2023 Mar. 31

Backwards

© DR. FRITZ FAULHABER GMBH & CO. KG
Specifications subject to change without notice.

www.faulhaber.com

Dimensional drawing

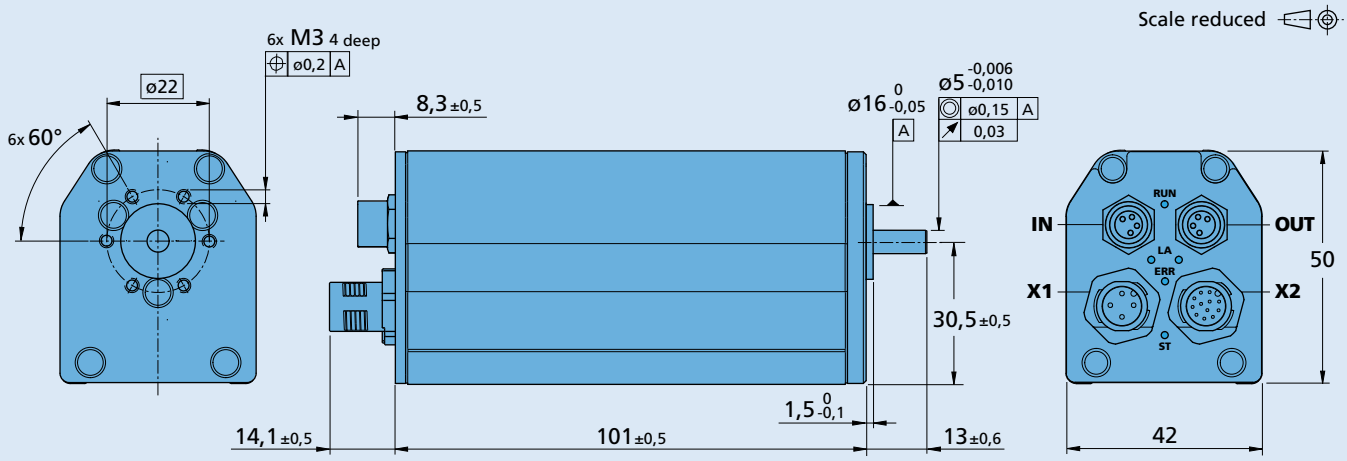

MCS 3268 G ... BX4 ET

Option, cable and connection information

Example product designation: **MCS3268G024BX4ET-5453**

Option	Type	Description
5452	Shaft seal	For use with oil emulsive substances
5453	Shaft seal	IP54 according to IEC 60529
5657	Motor flange seal	IP54 according to IEC 60529

Connection

Name	Function	Inputs-outputs	Description
X1	Motor and electronic power supply		
X2	Inputs-outputs	DigIn1, DigIn2, DigIn3 DigOut1, DigOut2 AnIn1, AnIn2 U_{out} / GND	TTL or. PLC level max. 0,7A continuous current ± 10V against AGND 5V
IN	Fieldbus		EtherCAT IN
OUT	Fieldbus		EtherCAT OUT

Note: For details on the connection assignment, see device manual for the MCS.

Product combination

Precision Gearheads / Lead Screws	Encoders	Drive Electronics	Cables / Accessories
32GPT 32/3R 42GPT 32L ... TL 32L ... ML 32L ... SB 32L ... PB		Integrated	To view our large range of accessory parts, please refer to the "Accessories" chapter.

© DR. FRITZ FAULHABER GMBH & CO. KG
Specifications subject to change without notice.

Motion Control Systems

160 mNm

V3.0, 4-Quadrant PWM
with RS232 or CANopen interface

140 W

MCS 3274 ... BP4 RS/CO

Values at 22°C and nominal voltage	MCS 3274G		024BP4 RS/CO	
Power supply electronic	U_P		12 ... 50	V DC
Power supply motor	U_{mot}		0 ... 50	V DC
Nominal voltage for motor	U_N		24	V
No-load speed (at U_N)	n_0		7 400	min^{-1}
Peak torque (S2 operation for max. 1s)	$M_{max.}$		320	mNm
Torque constant	k_M		28,4	mNm/A
PWM switching frequency	f_{PWM}		100	kHz
Efficiency electronic	η		95	%
Standby current for electronic (@ U_P=24V)	I_{el}		0,06	A
Speed range (up to 36V)			1 ... 11 600	min^{-1}
Shaft bearings		ball bearings, preloaded		
Shaft load max.:				
– with shaft diameter		5		mm
– radial at 3 000 min^{-1} (5 mm from mounting flange)		50		N
– axial at 3 000 min^{-1} (push / pull)		5		N
– axial at standstill (push / pull)		50		N
Shaft play:				
– radial		≤ 0,015		mm
– axial		= 0		mm
Operating temperature range		-40 ... +100		°C
Housing material		aluminium, stainless steel		
Protection class, with option V ring		IP54		
Mass		524		g

Rated values for continuous operation				
Rated torque	M_N		160	mNm
Rated current (thermal limit)	I_N		5,6	A
Rated speed	n_N		6 350	min^{-1}

Interface / range of functions	... RS	... CO
Configuration from Motion Manager 6.0	RS232	CANopen
Fieldbus	RS232	CANopen
Operating modes	PP, PV, PT, CSP, CSV, CST and homing acc. to IEC 61800-7-201 or IEC 61800-7-301 as well as position-, speed- and torque control via analog setpoint or voltage controller	
Speed range	see motor diagram	
Application programs	Max. 8 application programs (BASIC), one of which is an autostart function	
Additional functions	Touch-probe input, connection of a second incremental encoder, control of a holding brake	
Indicator	LEDs for displaying the operating state Trace as recorder (scope function) or logger	

Note:
The display shows the range of possible operation points of the drives at a given ambient temperature of 22°C.

The diagram indicates the recommended speed in relation to the available torque at the output shaft.
It includes the assembly on a plastic- as well as on a metal flange (assembly method: IM B 5).

The nominal voltage linear slope describes the maximal achievable operating points at nominal voltage.
Any points of operation above this linear slope will require a supply voltage $U_{mot} > U_N$.

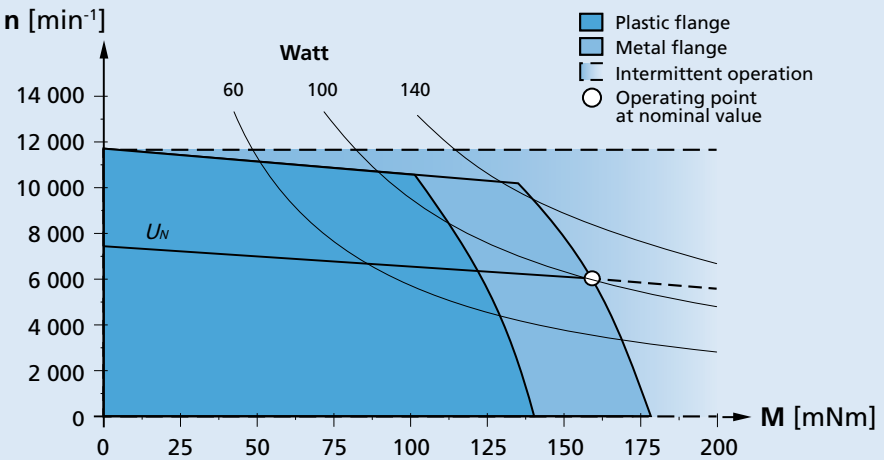

Recommended operation areas (example: nominal voltage 24V)

For notes on technical data and lifetime performance refer to "Technical Information".

Backwards

© DR. FRITZ FAULHABER GMBH & CO. KG
Specifications subject to change without notice.

Dimensional drawing

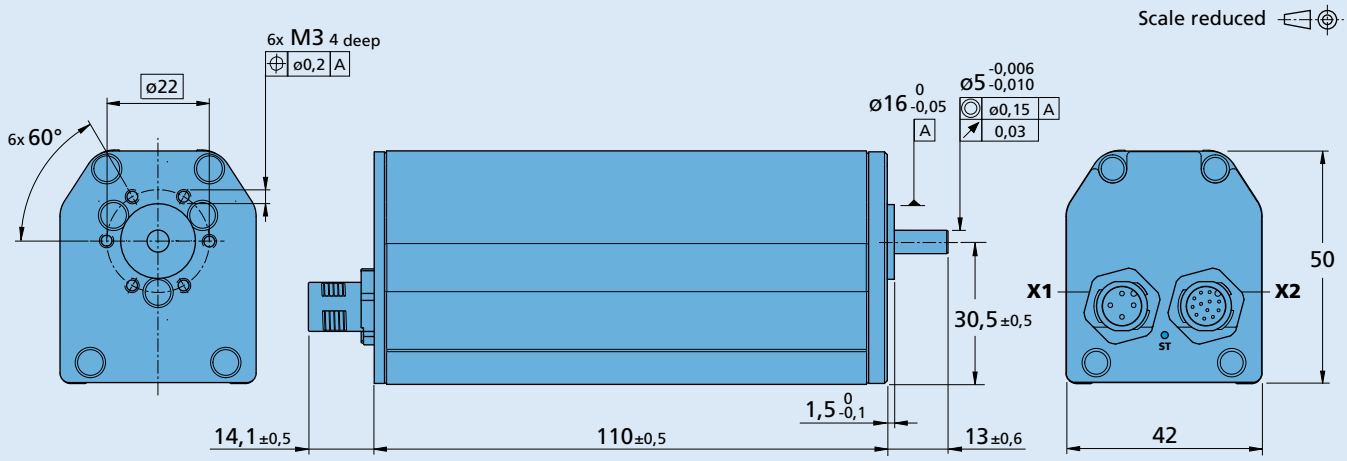

MCS 3274 G ... BP4 RS/CO

Option, cable and connection information

Example product designation: **MCS3274G024BP4RS-5453**

Option	Type	Description
5451	Cable outlet	Radial via base plate
5452	Shaft seal	For use with oil emulsive substances
5453	Shaft seal	IP54 according to IEC 60529
5657	Motor flange seal	IP54 according to IEC 60529

Connection

Name	Function	Inputs-outputs	Description
X1	Motor and electronic power supply		
X2	Inputs / outputs	DigIn1, DigIn2, DigIn3 DigOut1, DigOut2 AnIn1, AnIn2 U_{out} / GND	TTL or. PLC level max. 0,7A continuous current ± 10V against AGND 5V

Note: For details on the connection assignment, see device manual for the MCS.

Product combination

Precision Gearheads / Lead Screws	Encoders	Drive Electronics	Cables / Accessories
32GPT 32/3R 42GPT 32L ... TL 32L ... ML 32L ... SB 32L ... PB		Integrated	To view our large range of accessory parts, please refer to the "Accessories" chapter.

© DR. FRITZ FAULHABER GMBH & CO. KG
Specifications subject to change without notice.

Motion Control Systems

160 mNm

V3.0, 4-Quadrant PWM
with EtherCAT interface

140 W

MCS 3274 ... BP4 ET

Values at 22°C and nominal voltage	MCS 3274G		024BP4 ET	
Power supply electronic	U_P		12 ... 50	V DC
Power supply motor	U_{mot}		0 ... 50	V DC
Nominal voltage for motor	U_N		24	V
No-load speed (at U_N)	n_0		7 400	min^{-1}
Peak torque (S2 operation for max. 1s)	$M_{max.}$		320	mNm
Torque constant	k_M		28,4	mNm/A
PWM switching frequency	f_{PWM}		100	kHz
Efficiency electronic	η		95	%
Standby current for electronic (@ U_P=24V)	I_{el}		0,06	A
Speed range (up to 36V)			1 ... 11 600	min^{-1}
Shaft bearings		ball bearings, preloaded		
Shaft load max.:				
– with shaft diameter		5		mm
– radial at 3 000 min^{-1} (5 mm from mounting flange)		50		N
– axial at 3 000 min^{-1} (push / pull)		5		N
– axial at standstill (push / pull)		50		N
Shaft play:				
– radial		≤ 0,015		mm
– axial		= 0		mm
Operating temperature range		-40 ... +85		°C
Housing material		aluminium, stainless steel		
Protection class, with option V ring		IP54		
Mass		540		g

Rated values for continuous operation				
Rated torque	M_N		160	mNm
Rated current (thermal limit)	I_N		5,6	A
Rated speed	n_N		6 350	min^{-1}

Interface / range of functions	... ET
Configuration from Motion Manager 6.0	RS232
Fieldbus	EtherCAT
Operating modes	PP, PV, PT, CSP, CSV, CST and homing acc. to IEC 61800-7-201 or IEC 61800-7-301 as well as position-, speed- and torque control via analog setpoint or voltage controller
Speed range	see motor diagram
Application programs	Max. 8 application programs (BASIC), one of which is an autostart function
Additional functions	Touch-probe input, connection of a second incremental encoder, control of a holding brake
Indicator	LEDs for displaying the operating state Trace as recorder (scope function) or logger

Note:

The display shows the range of possible operation points of the drives at a given ambient temperature of 22°C.

The diagram indicates the recommended speed in relation to the available torque at the output shaft.
It includes the assembly on a plastic- as well as on a metal flange (assembly method: IM B 5).

The nominal voltage linear slope describes the maximal achievable operating points at nominal voltage.
Any points of operation above this linear slope will require a supply voltage $U_{mot} > U_N$.

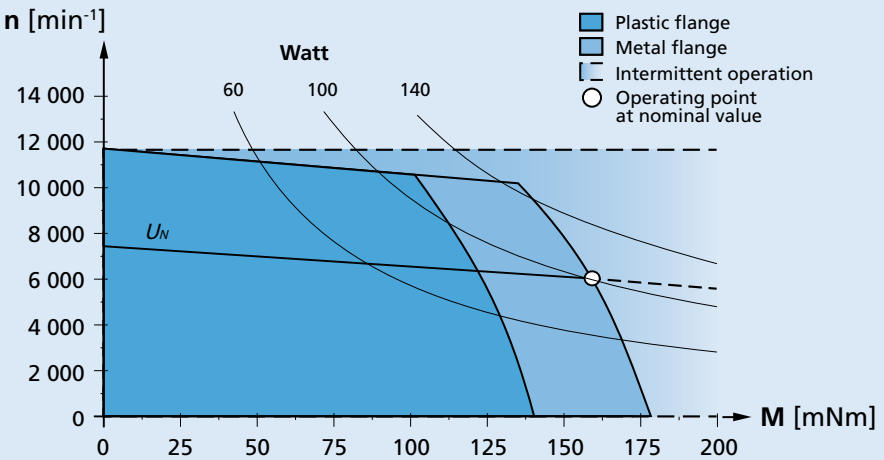

Recommended operation areas (example: nominal voltage 24V)

For notes on technical data and lifetime performance refer to "Technical Information".

Backwards

© DR. FRITZ FAULHABER GMBH & CO. KG
Specifications subject to change without notice.

Dimensional drawing

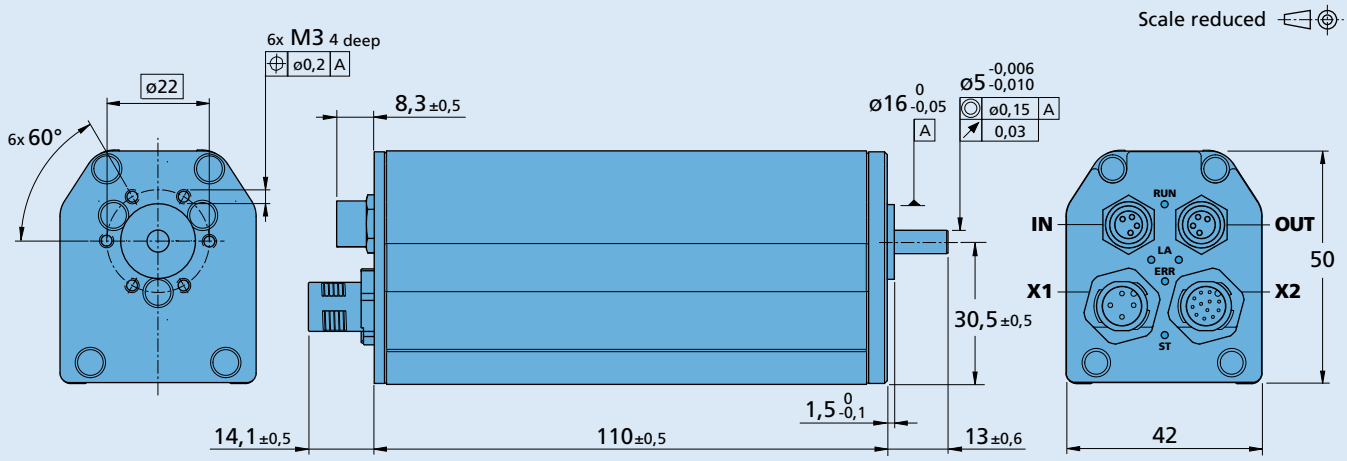

MCS 3274 G ... BP4 ET

Option, cable and connection information

Example product designation: **MCS3274G024BP4ET-5453**

Option	Type	Description
5452	Shaft seal	For use with oil emulsive substances
5453	Shaft seal	IP54 according to IEC 60529
5657	Motor flange seal	IP54 according to IEC 60529

Connection

Name	Function	Inputs-outputs	Description
X1	Motor and electronic power supply		
X2	Inputs-outputs	DigIn1, DigIn2, DigIn3 DigOut1, DigOut2 AnIn1, AnIn2 U_{out} / GND	TTL or. PLC level max. 0,7A continuous current ± 10V against AGND 5V
IN	Fieldbus		EtherCAT IN
OUT	Fieldbus		EtherCAT OUT

Note: For details on the connection assignment, see device manual for the MCS.

Product combination

Precision Gearheads / Lead Screws	Encoders	Drive Electronics	Cables / Accessories
32GPT 32/3R 42GPT 32L ... TL 32L ... ML 32L ... SB 32L ... PB		Integrated	To view our large range of accessory parts, please refer to the "Accessories" chapter.

© DR. FRITZ FAULHABER GMBH & CO. KG
Specifications subject to change without notice.

Stepper Motors

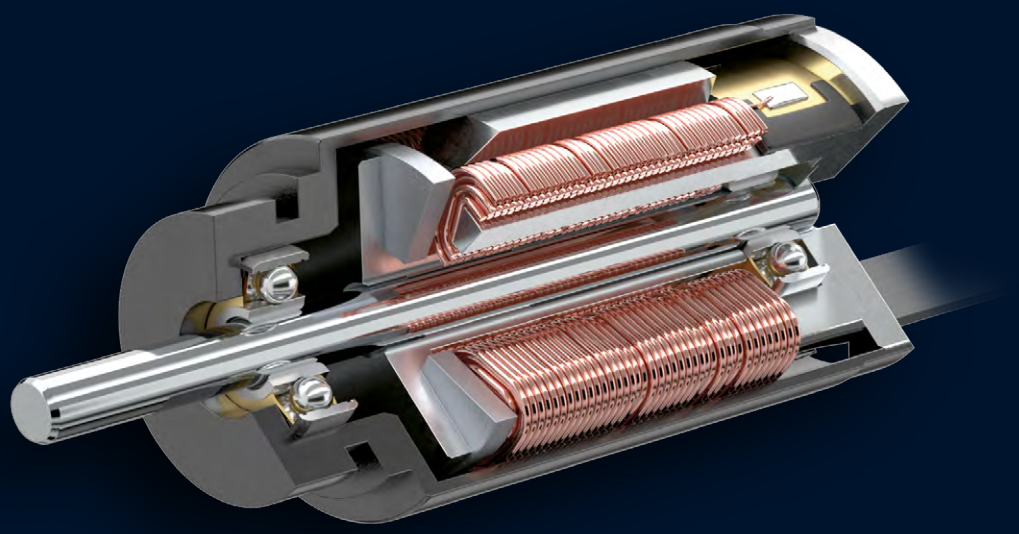

Stepper Motors

DM0620	Two Phase with Disc Magnet	0.25 mNm
AM0820	Two Phase	0.65 mNm
AM1020	Two Phase	1.6 mNm
DM1220	Two Phase with Disc Magnet	2.4 mNm
AM1524	Two Phase	6 mNm
AM2224	Two Phase	22 mNm
AM2224R3	Two Phase	22 mNm
AM3248	Two Phase	85 mNm
DM40100R	Two Phase with Disc Magnet	62 mNm
DM52100N	Two Phase with Disc Magnet	200 mNm
DM52100R	Two Phase with Disc Magnet	180 mNm
DM52100S	Two Phase with Disc Magnet	116 mNm
DM66200H	Two Phase, 200 steps per revolution	307 mNm

Backwards

Stepper Motors 0,25 mNm

Two phase with Disc Magnet,
20 steps per revolution

Series DM0620

Values at 20°C	DM0620	0130	0080	0040	
Nominal current per phase (both phases ON)		0,13	0,08	0,04	A
Boosted current per phase (both phases ON)		0,26	0,16	0,08	A
Nominal voltage per phase (both phases ON)		2	3	6	V
Phase resistance		13,6	30	120	Ω
Phase inductance (1 kHz)		2	4,5	18,5	mH
Holding torque (at nominal current in both phases)		0,25	0,25	0,25	mNm
Holding torque at boosted current		0,39	0,39	0,39	mNm
Residual torque, typ.		0,03	0,03	0,03	mNm
Back-EMF amplitude		0,53	0,83	1,6	V/k step/s
Electrical time constant	0,15				ms
Rotor inertia	$0{,}5 \cdot 10^{-9}$				kgm²
Step angle (full step)	18				°
Angular accuracy	±5				%
Angular acceleration, max.	$780 \cdot 10^{3}$				rad/s²
Resonance frequency (at no load)	110				Hz
Thermal resistance	15 / 96,6				K/W
Thermal time constant	3,2 / 120				s
Operating temperature range	-35 ... +70				°C
Winding temperature, max.	+130				°C
Shaft bearings [1] [2]	sintered bearing (Bearing code: SB)	ball bearings, preloaded (Bearing code: 2R)			
Shaft load max.:					
– with shaft diameter	1	1			mm
– radial at 5 000 min^{-1} (3 mm from bearing)	0,3	3			N
– axial at 5 000 min^{-1}	0,5	0,5			N
– axial at standstill	0,5	5,8			N
Shaft play:					
– radial	0,02	0,012			mm
– axial	0	0			mm
Housing material	aluminium, black anodized				
Mass	1,1				g
Magnet material	NdFeB				

[1] Special lubricant options available on request.
[2] 2 preloaded ball bearings available on request for vacuum / low temperature (bearing code: RC).

Driver settings

Relevant for 2 phases ON only.
On PWM drivers or chopper (current mode), the current is set to the nominal value and the supply voltage is typically 1.5 to 2.5x higher than the nominal voltage.

Curves measured with a load inertia of $3 \cdot 10^{-9}$ kgm², in half-step mode for the "1 x nominal voltage" curve, in 1/4 micro-stepping mode for the other curves.

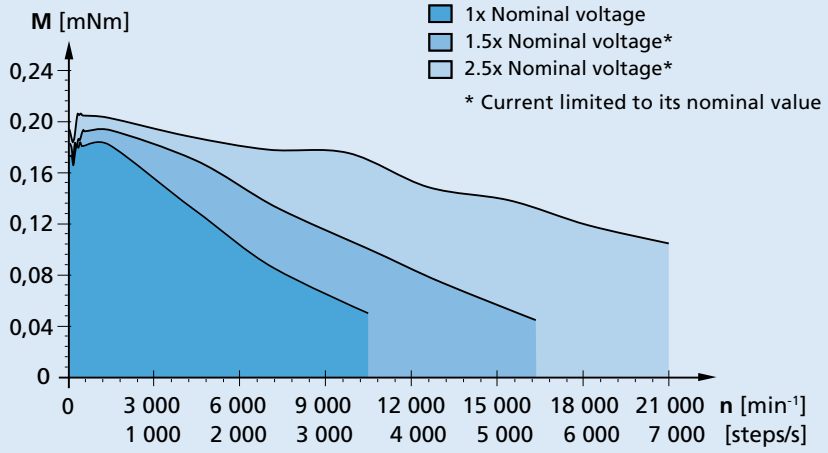

Possible operation areas

© DR. FRITZ FAULHABER GMBH & CO. KG
Specifications subject to change without notice.
www.faulhaber.com

Dimensional drawing

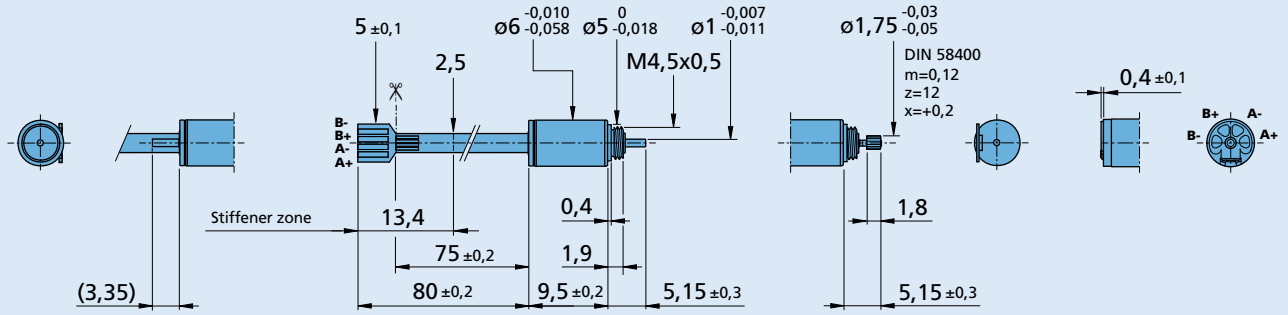

Recommended connectors
Pitch: 1mm - FPC/FFC, 4 poles
JST 04FMN-SMT-A-TF or similar.
Pitch: 0,5mm - FPC/FFC, 4 poles
Molex 52745 or similar.

Flex PCB
Thickness: 0,16 mm. Bending radius 3 mm min.
Thickness of pads area (stiffener)
0,3 mm (± 0,05), not flexible

Flex PCB for cables
Not available with double output shaft executions.

DM0620 for Gearhead 06/1

Options and connection information

Example product designation: **DM06202R008011**

Motor executions front shaft	Motor executions double shaft	PCB type	Front shaft description
31	30	Flex PCB 80mm p=1mm	Plain shaft, ø1 mm
35	36	Flex PCB 80mm p=1mm	With pinion for gearheads 06/1
76	75	Flex PCB 80mm p=1mm	Plain shaft, for lead screw M1.2
78	77	Flex PCB 80mm p=1mm	Plain shaft, for lead screw M1.6
11		Flex PCB for cable	Plain shaft, ø1 mm
15		Flex PCB for cable	With pinion for gearheads 06/1
26		Flex PCB for cable	Plain shaft, for lead screw M1.2
28		Flex PCB for cable	Plain shaft, for lead screw M1.6

Connection

No.	Function
1	Phase A +
2	Phase A -
3	Phase B +
4	Phase B -

Note : Standard version is delivered with a flex PCB of 80mm that the user can cut himself as indicated on the drawing above. A version with pre-cut PCB is available on request.

Option	Description
Single leads	PTFE single leads length 50/100/150/300 mm
Connector	PVC single leads length 50/100/150/300 mm or ETFE/PTFE single leads length 150 mm with connector Molex 51021-0400

Product combination

Precision Gearheads / Lead Screws	Encoders	Drive Electronics	Cables / Accessories
06/1 M1,2 x 0,25 x L1 M1,6 x 0,35 x L1 06L ... SL 06L ... HL		MCST 3601	Detailed cable options can be found in Application Note AN 010 to be downloaded on FAULHABER website.

© DR. FRITZ FAULHABER GMBH & CO. KG
Specifications subject to change without notice.
www.faulhaber.com

Stepper Motors 0,65 mNm

Two phase, 20 steps per revolution

Series AM0820

Values at 20°C	AM0820	0225	0150	0080	
Nominal current per phase (both phases ON)		0,225	0,15	0,08	A
Boosted current per phase (both phases ON)		0,45	0,3	0,16	A
Nominal voltage per phase (both phases ON)		2	3	5	V
Phase resistance		7,3	18	56	Ω
Phase inductance (1 kHz)		1,4	3,9	12,6	mH
Holding torque (at nominal current in both phases)		0,65	0,65	0,65	mNm
Holding torque at boosted current		1	1	1	mNm
Residual torque, typ.		0,13	0,13	0,13	mNm
Back-EMF amplitude		0,8	1,3	2,4	V/k step/s
Electrical time constant	0,21				ms
Rotor inertia	$2{,}75 \cdot 10^{-9}$				kgm²
Step angle (full step)	18				°
Angular accuracy	±10				%
Angular acceleration, max.	$363 \cdot 10^{3}$				rad/s²
Resonance frequency (at no load)	75				Hz
Thermal resistance	4,1 / 65,3				K/W
Thermal time constant	3,5 / 160				s
Operating temperature range	-30 ... +70				°C
Winding temperature, max.	+130				°C
Shaft bearings [1] [2]	sintered bearings (Bearing code: SB)	ball bearings, preloaded (Bearing code: 2R)			
Shaft load max.:					
– with shaft diameter	1	1			mm
– radial at 5 000 min^{-1} (3 mm from bearing)	0,3	3			N
– axial at 5 000 min^{-1}	0,2	1,5			N
– axial at standstill	0,2	5,8			N
Shaft play:					
– radial	0,015	0,012			mm
– axial	0,14	0			mm
Housing material	aluminium, black anodized				
Mass	3,3				g
Magnet material	NdFeB				

[1] Special lubricant options available on request.
[2] 2 preloaded ball bearings available on request for vacuum / low temperature (bearing code: RC).

Driver settings

Relevant for 2 phases ON only.
On PWM drivers or chopper (current mode), the current is set to the nominal value and the supply voltage is typically 2.5 to 5x higher than the nominal voltage.

Curves measured with a load inertia of $6 \cdot 10^{-9}$ kgm², in half-step mode for the "1 x nominal voltage" curve, in 1/4 micro-stepping mode for the other curves.

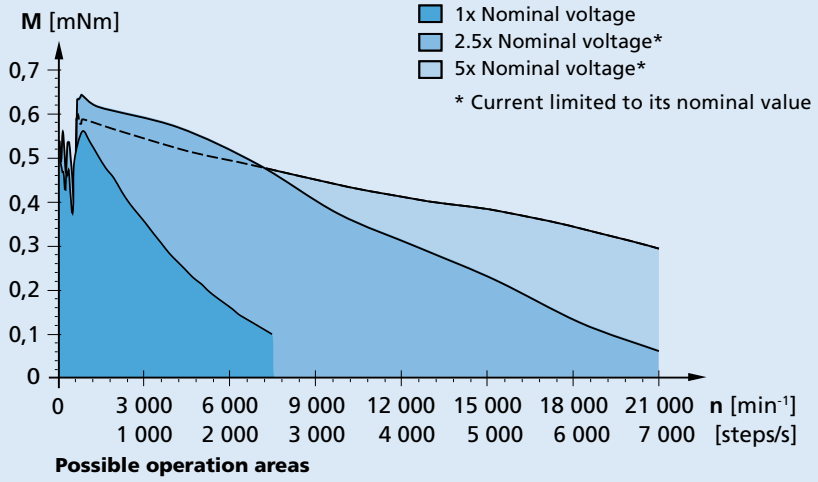

© DR. FRITZ FAULHABER GMBH & CO. KG
Specifications subject to change without notice.
www.faulhaber.com

Dimensional drawing

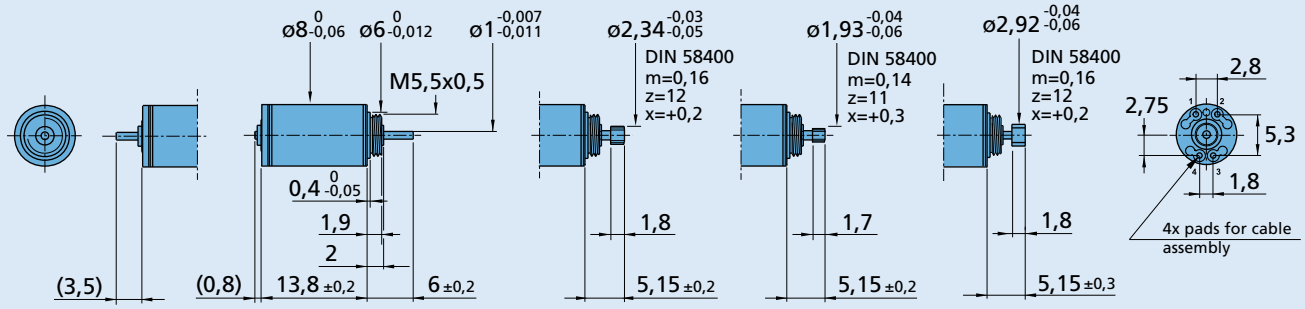

AM0820

for Gearhead 08/1

for Gearhead 08/2, 08/3

for Gearhead 10/1

Options and connection information

Example product designation: **AM08202R015001**

Motor executions front shaft	Motor executions double shaft	Front shaft description
01	00	Plain shaft
08	09	With pinion for gearheads 08/1
10	11	With pinion for gearheads 10/1
12	13	With pinion for gearheads 08/2, 08/3
21	20	Plain shaft for lead screw M1,2
23	22	Plain shaft for lead screw M2 - M3
25	24	Plain shaft for lead screw M1,6
	40	Plain shaft for encoder IEP3-4096 (an additional motor cable is mandatory)
	41	With pinion for gearheads 08/1 with encoder IEP3-4096 (an additional motor cable is mandatory)
	42	With pinion for gearheads 10/1 with encoder IEP3-4096 (an additional motor cable is mandatory)
	43	With pinion for gearheads 08/2, 08/3 with encoder IEP3-4096 (an additional motor cable is mandatory)
	44	Plain shaft for lead screw M1,2 with encoder IEP3-4096 (an additional motor cable is mandatory)
	45	Plain shaft for lead screw M2 - M3 with encoder IEP3-4096 (an additional motor cable is mandatory)
	46	Plain shaft for lead screw M1,6 with encoder IEP3-4096 (an additional motor cable is mandatory)

Connection

No.	Function
1	Phase A +
2	Phase A -
3	Phase B +
4	Phase B -

Option	Description
Single leads	PTFE single leads length 50/100/150/300 mm
Connector	PVC single leads length 50/100/150/300 mm or ETFE/PTFE single leads length 150 mm with connector Molex 51021-0400

Product combination

Precision Gearheads / Lead Screws	Encoders	Drive Electronics	Cables / Accessories
08/1 08/2 08/3 10/1 M1,2 x 0,25 x L1 M1,6 x 0,35 x L1 M2 x 0,2 x L1 M3 x 0,5 x L1 08L ... SL 08L ... HL 10L ... SL	IEP3-4096	MCST 3601	Detailed cable options can be found in Application Note AN 010 to be downloaded on FAULHABER website.

© DR. FRITZ FAULHABER GMBH & CO. KG
Specifications subject to change without notice.

Stepper Motors 1,6 mNm

Two phase, 20 steps per revolution

Series AM1020

Values at 20°C	AM1020	0250	0180	0090	0045	
Nominal current per phase (both phases ON)		0,25	0,18	0,09	0,045	A
Boosted current per phase (both phases ON)		0,5	0,36	0,18	0,09	A
Nominal voltage per phase (both phases ON)		2	3	6	12	V
Phase resistance		8	16	65	250	Ω
Phase inductance (1 kHz)		2,4	5,2	21,4	80,1	mH
Holding torque (at nominal current in both phases)		1,6	1,6	1,6	1,6	mNm
Holding torque at boosted current		2,4	2,4	2,4	2,4	mNm
Residual torque, typ.		0,14	0,14	0,14	0,14	mNm
Back-EMF amplitude		1,8	2,6	5,3	10,5	V/k step/s
Electrical time constant	0,32					ms
Rotor inertia	$9 \cdot 10^{-9}$					kgm²
Step angle (full step)	18					°
Angular accuracy	±10					%
Angular acceleration, max.	$256 \cdot 10^{3}$					rad/s²
Resonance frequency (at no load)	65					Hz
Thermal resistance	3,9 / 53,8					K/W
Thermal time constant	4,5 / 200					s
Operating temperature range	-35 ... +70					°C
Winding temperature, max.	+130					°C
Shaft bearings [1] [2]	sintered bearings (Bearing code: SB)		ball bearings, preloaded (Bearing code: 2R)			
Shaft load max.:						
– with shaft diameter	1,2		1,2			mm
– radial at 5 000 min^{-1} (3 mm from bearing)	0,3		4			N
– axial at 5 000 min^{-1}	0,3		3			N
– axial at standstill	0,3		11			N
Shaft play:						
– radial	0,015		0,012			mm
– axial	0,15		0			mm
Housing material	aluminium, black anodized					
Mass	5,5					g
Magnet material	NdFeB					

[1] Special lubricant options available on request.
[2] 2 preloaded ball bearings available on request for vacuum / low temperature (bearing code: RC).

Driver settings

Relevant for 2 phases ON only.
On PWM drivers or chopper (current mode), the current is set to the nominal value and the supply voltage is typically 2.5 to 5x higher than the nominal voltage.

Curves measured with a load inertia of $6 \cdot 10^{-9}$ kgm², in half-step mode for the "1 x nominal voltage" curve, in 1/4 micro-stepping mode for the other curves.

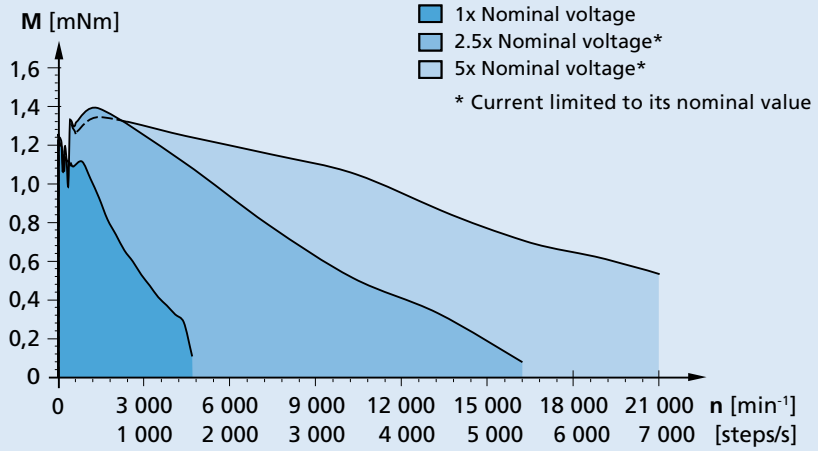

Possible operation areas

© DR. FRITZ FAULHABER GMBH & CO. KG
Specifications subject to change without notice.
www.faulhaber.com

Dimensional drawing

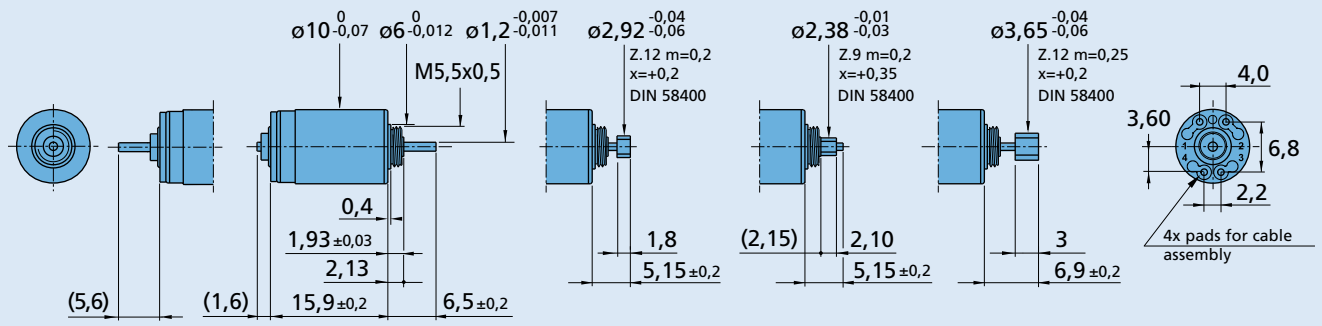

AM1020

for Gearhead 10/1

for Gearhead 12/3, 12/5

for Gearhead 12/4

Options and connection information

Example product designation: **AM10202R018001**

Motor executions front shaft	Motor executions double shaft	Front shaft description
01	00	Plain shaft
08	09	With pinion for gearheads 10/1
10	11	With pinion for gearheads 12/3 and 12/5
21	20	Plain shaft for lead screw M1,2
23	22	Plain shaft for lead screw M2 - M3
25	24	Plain shaft for lead screw M1,6
31	30	With pinion for gearheads 12/4
	40	Plain shaft with encoder IEP3-4096 (an additional motor cable is mandatory)
	41	Plain shaft for lead screw M2 - M3 with encoder IEP3-4096 (an additional motor cable is mandatory)
	42	Plain shaft for lead screw M1,6 with encoder IEP3-4096 (an additional motor cable is mandatory)
	43	Plain shaft for lead screw M1,2 with encoder IEP3-4096 (an additional motor cable is mandatory)
	44	With pinion for gearheads 10/1 with encoder IEP3-4096 (an additional motor cable is mandatory)
	45	With pinion for gearheads 12/3 and 12/5 with encoder IEP3-4096 (an additional motor cable is mandatory)
	46	With pinion for gearheads 12/4 with encoder IEP3-4096 (an additional motor cable is mandatory)

Connection

No.	Function
1	Phase A +
2	Phase A -
3	Phase B +
4	Phase B -

Option	Description
Single leads	PTFE single leads length 50/100/150/300 mm
Connector	PVC single leads length 50/100/150/300 mm or ETFE/PTFE single leads length 150 mm with connector Molex 51021-0400

Product combination

Precision Gearheads / Lead Screws	Encoders	Drive Electronics	Cables / Accessories
10/1 12/3 12/4 12/5 M1,2 x 0,25 x L1 M1,6 x 0,35 x L1 M2 x 0,2 x L1 M3 x 0,5 x L1 10L ... SL	IEP3-4096	MCST 3601	Detailed cable options can be found in Application Note AN 010 to be downloaded on FAULHABER website.

© DR. FRITZ FAULHABER GMBH & CO. KG
Specifications subject to change without notice.

Stepper Motors 2,4 mNm

Two phase with Disc Magnet, 20 steps per revolution, microstepping motor

Series DM1220

Values at 20°C	DM1220	0330	0220	0110	0055	
Nominal current per phase (both phases ON)		0,33	0,22	0,11	0,055	A
Boosted current per phase (both phases ON)		0,66	0,44	0,22	0,11	A
Nominal voltage per phase (both phases ON)		2	3	6	12	V
Phase resistance		4,5	10,4	41	168	Ω
Phase inductance (1 kHz)		1,3	3,5	13	57	mH
Holding torque (at nominal current in both phases)		2,4	2,4	2,4	2,4	mNm
Holding torque at boosted current		4,1	4,1	4,1	4,1	mNm
Residual torque, typ.		0,07	0,07	0,07	0,07	mNm
Back-EMF amplitude		1,7	2,6	5	10	V/k step/s
Electrical time constant	0,28					ms
Rotor inertia	$18{,}5 \cdot 10^{-9}$					kgm²
Step angle (full step)	18					°
Angular accuracy	±3					%
Angular acceleration, max.	$221 \cdot 10^{3}$					rad/s²
Resonance frequency (at no load)	55					Hz
Thermal resistance	11,9 / 46,5					K/W
Thermal time constant	5 / 300					s
Operating temperature range	-35 ... +70					°C
Winding temperature, max.	+130					°C
Shaft bearings [1] [2]	sintered bearing (Bearing code: SB)		ball bearings, preloaded (Bearing code: 2R)			
Shaft load max.:						
– with shaft diameter	1,5		1,5			mm
– radial at 5 000 min^{-1} (3 mm from bearing)	0,5		6			N
– axial at 5 000 min^{-1}	3		3			N
– axial at standstill	3		17			N
Shaft play:						
– radial	0,015		0,012			mm
– axial	0		0			mm
Housing material	aluminium, black anodized					
Mass	9					g
Magnet material	NdFeB					

[1] Special lubricant options available on request.
[2] 2 preloaded ball bearings available on request for vacuum / low temperature (bearing code: RC).

Driver settings

Relevant for 2 phases ON only.
On PWM drivers or chopper (current mode), the current is set to the nominal value and the supply voltage is typically 2.5 to 5x higher than the nominal voltage.

Curves measured with a load inertia of $20 \cdot 10^{-9}$ kgm², in half-step mode for the "1 x nominal voltage" curve, in 1/4 micro-stepping mode for the other curves.

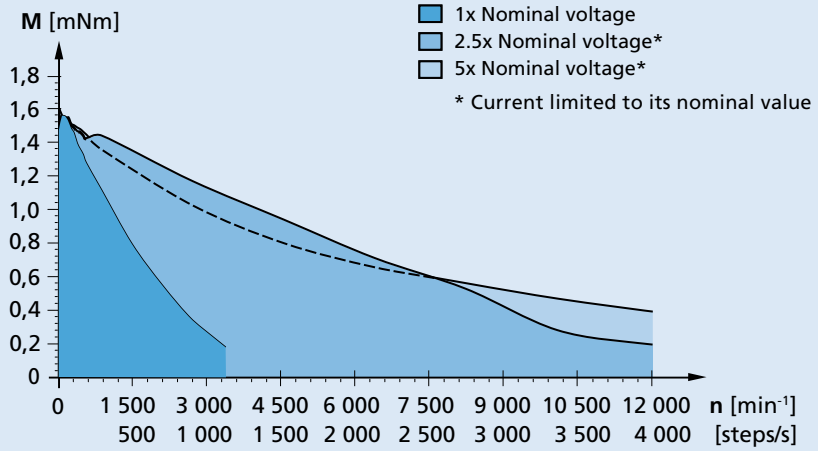

Possible operation areas

© DR. FRITZ FAULHABER GMBH & CO. KG
Specifications subject to change without notice.

Dimensional drawing

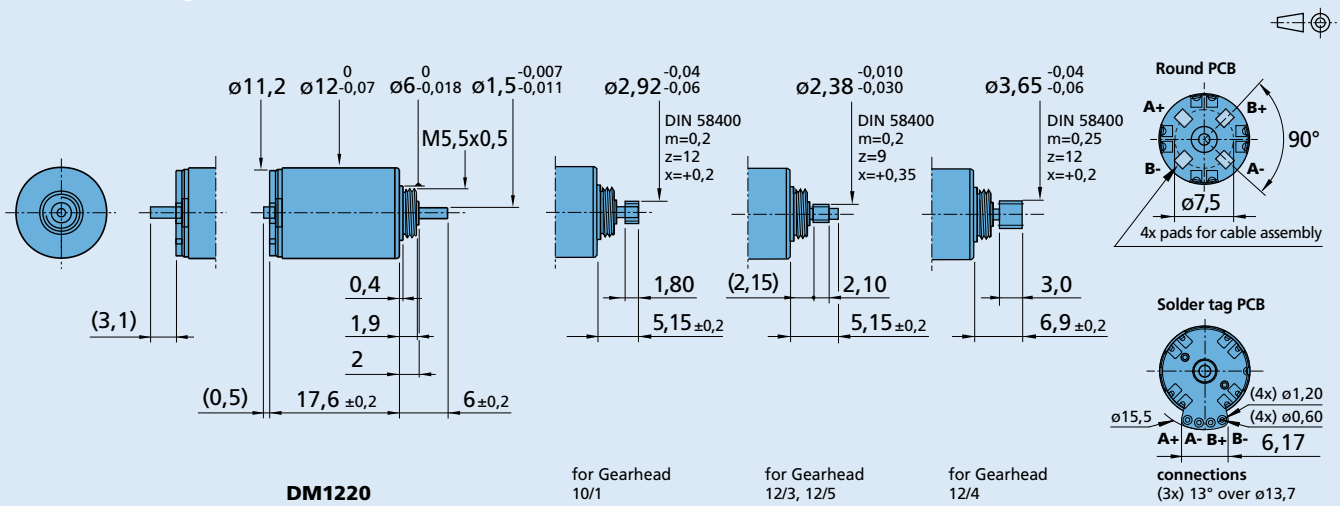

Options and connection information

Example product designation: **DM12202R033051**

Motor executions front shaft	Motor executions double shaft	PCB type	Front shaft description
51	50	Round PCB	Plain shaft, for lead screw M3
55	56	Round PCB	With pinion for gearheads 10/1
57	58	Round PCB	With pinion for gearheads 12/3, 12/5
59	60	Round PCB	With pinion for gearheads 12/4
83	82	Round PCB	Plain shaft, for lead screw M2
31	30	Solder tag PCB	Plain shaft, for lead screw M3
35	34	Solder tag PCB	With pinion for gearheads 10/1
37	36	Solder tag PCB	With pinion for gearheads 12/3, 12/5
39	38	Solder tag PCB	With pinion for gearheads 12/4
53	52	Solder tag PCB	Plain shaft, for lead screw M2

Connection

No.	Function
1	Phase A +
2	Phase A -
3	Phase B +
4	Phase B -

Option	Description
Single leads	PTFE single leads length 50/100/150/300 mm
Connector	PVC single leads length 50/100/150/300 mm or ETFE/PTFE single leads length 150 mm with connector Molex 51021-0400

Product combination

Precision Gearheads / Lead Screws	Encoders	Drive Electronics	Cables / Accessories
10/1 12/3 12/4 12/5 M2 x 0,2 x L1 M3 x 0,5 x L1 10L ... SL		MCST 3601	Detailed cable options can be found in Application Note AN 010 to be downloaded on FAULHABER website.

© DR. FRITZ FAULHABER GMBH & CO. KG
Specifications subject to change without notice.

Stepper Motors 6 mNm

Two phase, 24 steps per revolution

Series AM1524

Values at 20°C	AM1524	0450	0250	0150	0075	
Nominal current per phase (both phases ON)		0,45	0,25	0,15	0,075	A
Boosted current per phase (both phases ON)		0,9	0,5	0,3	0,15	A
Nominal voltage per phase (both phases ON)		2	3,5	6	12	V
Phase resistance		3,6	12,5	35	145	Ω
Phase inductance (1 kHz)		1,9	6,3	16,5	70,6	mH
Holding torque (at nominal current in both phases)		6	6	6	6	mNm
Holding torque at boosted current		10	10	10	10	mNm
Residual torque, typ.		0,51	0,51	0,51	0,51	mNm
Back-EMF amplitude		2,4	4,4	7,2	14,7	V/k step/s
Electrical time constant	0,5					ms
Rotor inertia	$45 \cdot 10^{-9}$					kgm²
Step angle (full step)	15					°
Angular accuracy	±10					%
Angular acceleration, max.	$222 \cdot 10^{3}$					rad/s²
Resonance frequency (at no load)	60					Hz
Thermal resistance	12,9 / 31,6					K/W
Thermal time constant	6 / 350					s
Operating temperature range	-35 ... +70					°C
Winding temperature, max.	+130					°C
Shaft bearings [1] [2]	sintered bearings (Bearing code: SB)		ball bearings, preloaded (Bearing code: 2R)			
Shaft load max.:						
– with shaft diameter	1,5		1,5			mm
– radial at 5 000 min^{-1} (3 mm from bearing)	0,5		6			N
– axial at 5 000 min^{-1}	0,5		2			N
– axial at standstill	0,5		17			N
Shaft play:						
– radial	0,015		0,012			mm
– axial	0,15		0			mm
Housing material	aluminium, black anodized					
Mass	12					g
Magnet material	NdFeB					

[1] Special lubricant options available on request.
[2] 2 preloaded ball bearings available on request for vacuum / low temperature (bearing code: RC).

Driver settings

Relevant for 2 phases ON only.
On PWM drivers or chopper (current mode), the current is set to the nominal value and the supply voltage is typically 2.5 to 5x higher than the nominal voltage.

Curves measured with a load inertia of $50 \cdot 10^{-9}$ kgm², in half-step mode for the "1 x nominal voltage" curve, in 1/4 micro-stepping mode for the other curves.

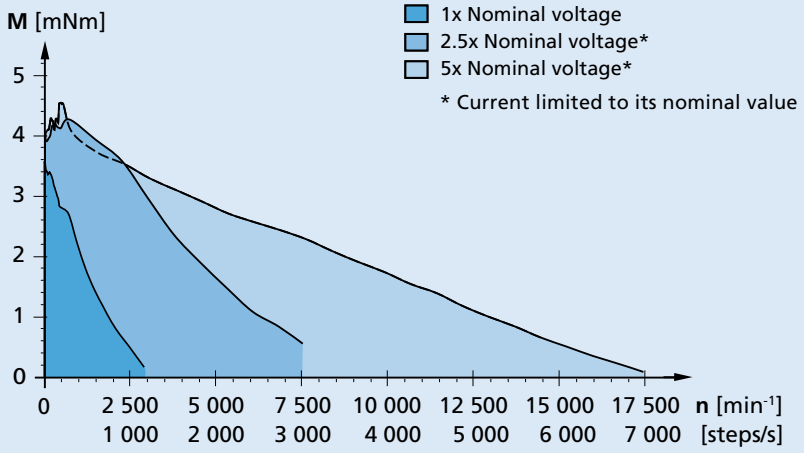

Possible operation areas

© DR. FRITZ FAULHABER GMBH & CO. KG
Specifications subject to change without notice.
www.faulhaber.com

Dimensional drawing

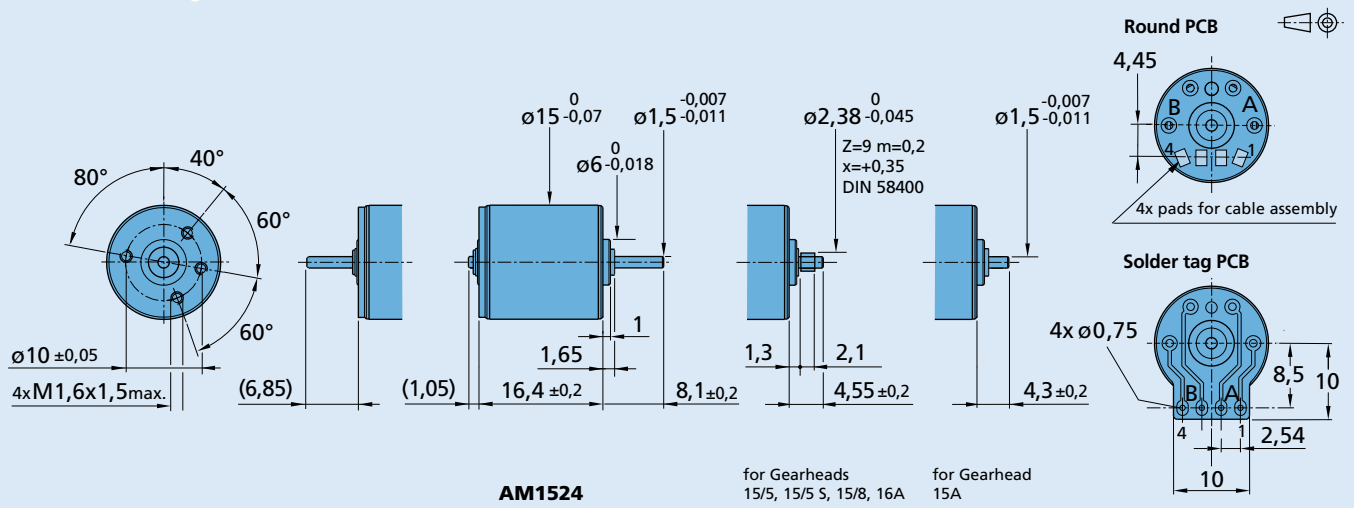

Options and connection information

Example product designation: **AM15242R015055**

Motor executions front shaft	Motor executions double shaft	PCB type	Front shaft description
55	54	Round PCB	Plain shaft, L=8,1 mm for gearheads 15/10, 16/7, 17/1 and lead screw M3
57	56	Round PCB	With pinion for gearheads 15/5, 15/5 S, 15/8 and 16A
70	71	Round PCB	Plain shaft, L=4,3 mm for gearheads 15A
83	82	Round PCB	Plain shaft, for lead screw M2
05	04	Solder tag PCB	Plain shaft, L=8,1 mm for gearheads 15/10, 16/7, 17/1 and lead screw M3
07	06	Solder tag PCB	With pinion for gearheads 15/5, 15/5 S, 15/8 and 16A
72	73	Solder tag PCB	Plain shaft, L=4,3 mm for gearheads 15A
23	22	Solder tag PCB	Plain shaft, for lead screw M2
	40	Round PCB	Plain shaft, for lead screw M2, with encoder IEP3-4096 (an additional motor cable is mandatory)
	41	Round PCB	Plain shaft, L=8,1 mm for gearheads 15/10, 16/7, 17/1 and lead screw M3, with encoder IEP3-4096 (an additional motor cable is mandatory)
	42	Round PCB	With pinion for gearheads 15/5, 15/5 S, 15/8 and 16A, with encoder IEP3-4096 (an additional motor cable is mandatory)
	43	Round PCB	Plain shaft, L=4,3 mm for gearheads 15A, with encoder IEP3-4096 (an additional motor cable is mandatory)

Connection

No.	Function
1	Phase A +
2	Phase A -
3	Phase B +
4	Phase B -

Option	Description
Single leads	PTFE single leads length 50/100/150/300 mm
Connector	PVC single leads length 50/100/150/300 mm or ETFE/PTFE single leads length 150 mm with connector Molex 51021-0400

Product combination

Precision Gearheads / Lead Screws	Encoders	Drive Electronics	Cables / Accessories
15A 15/5 15/5 S 15/8 15/10 16A 16/7 17/1 M2 x 0,2 x L1 M3 x 0,5 x L1	IEP3-4096	MCST 3601	Detailed cable options can be found in Application Note AN 010 to be downloaded on FAULHABER website.

© DR. FRITZ FAULHABER GMBH & CO. KG
Specifications subject to change without notice.

Stepper Motors 22 mNm

Two phase, 24 steps per revolution

Series AM2224

Values at 20°C	AM2224	1000	0500	0250	0125	
Nominal current per phase (both phases ON)		1	0,5	0,25	0,125	A
Boosted current per phase (both phases ON)		2	1	0,5	0,25	A
Nominal voltage per phase (both phases ON)		1,4	3	6	12	V
Phase resistance		0,9	4,8	18	75	Ω
Phase inductance (1 kHz)		0,9	4,3	16,3	65,6	mH
Holding torque (at nominal current in both phases)		22	22	22	22	mNm
Holding torque at boosted current		37	37	37	37	mNm
Residual torque, typ.		1,47	1,47	1,47	1,47	mNm
Back-EMF amplitude		3,8	8,3	16,3	32,7	V/k step/s
Electrical time constant	1,7					ms
Rotor inertia	$253 \cdot 10^{-9}$					kgm²
Step angle (full step)	15					°
Angular accuracy	±10					%
Angular acceleration, max.	$146 \cdot 10^{3}$					rad/s²
Resonance frequency (at no load)	45					Hz
Thermal resistance	4,8 / 20,4					K/W
Thermal time constant	10 / 620					s
Operating temperature range	-35 ... +70					°C
Winding temperature, max.	+130					°C
Shaft bearings [1] [2]	sintered bearings (Bearing code: SB)		ball bearings, preloaded (Bearing code: 2R)			
Shaft load max.:						
– with shaft diameter	2		2			mm
– radial at 5 000 min^{-1} (3 mm from bearing)	1,5		8			N
– axial at 5 000 min^{-1}	0,5		4			N
– axial at standstill	0,5		24,8			N
Shaft play:						
– radial	0,03		0,015			mm
– axial	0,2		0			mm
Housing material	aluminium, black anodized					
Mass	43					g
Magnet material	NdFeB					

[1] Special lubricant options available on request.
[2] 2 preloaded ball bearings available on request for vacuum / low temperature (bearing code: RC).

Driver settings

Relevant for 2 phases ON only.
On PWM drivers or chopper (current mode), the current is set to the nominal value and the supply voltage is typically 4 to 8x higher than the nominal voltage.

Curves measured with a load inertia of $600 \cdot 10^{-9}$ kgm², in half-step mode for the "1 x nominal voltage" curve, in 1/4 micro-stepping mode for the other curves.

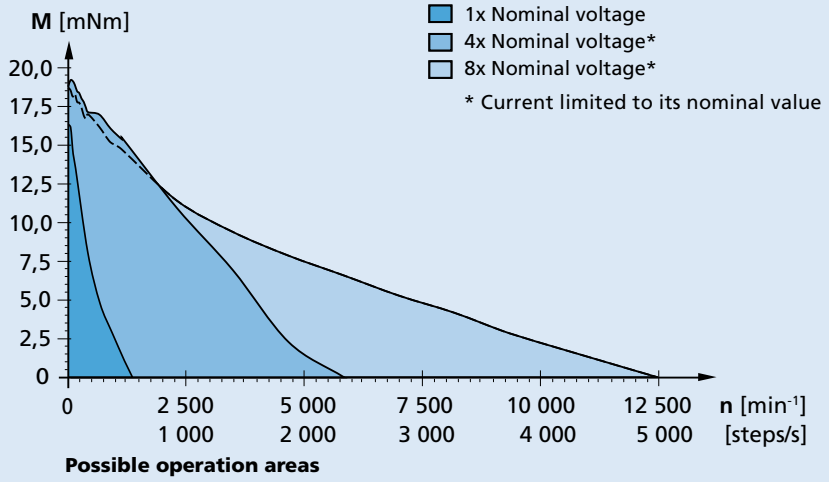

Possible operation areas

© DR. FRITZ FAULHABER GMBH & CO. KG
Specifications subject to change without notice.
www.faulhaber.com

Dimensional drawing

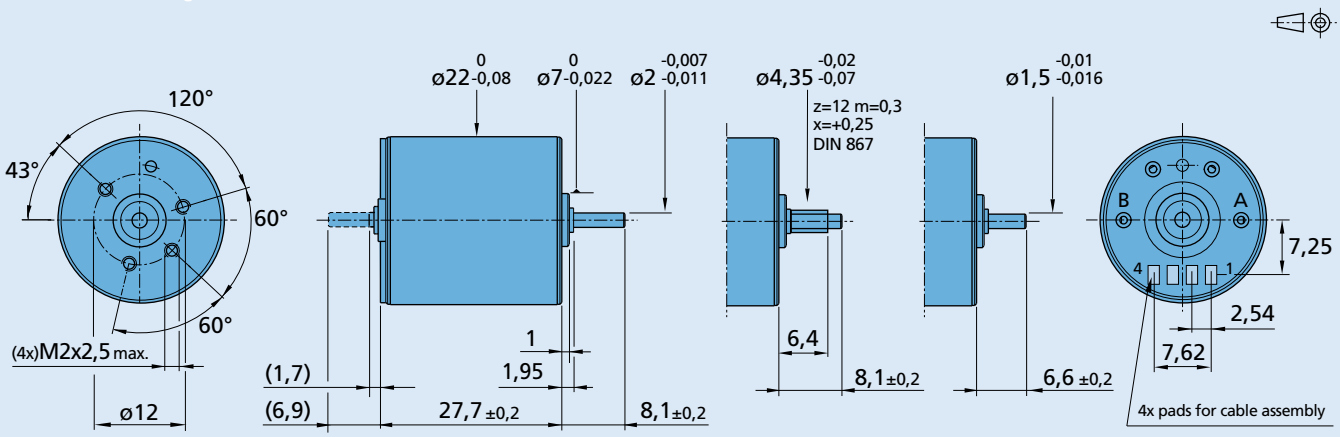

AM2224

for Gearheads 22/2, 22/5

for Gearheads 22E, 22EKV

Options and connection information

Example product designation: **AM22242R050010**

Motor executions front shaft	Motor executions double shaft	Front shaft description
10	11	Plain shaft, L=8,1 mm ø2 mm for gearheads 20/1R, 22/7, 23/1, 22GPT and Linear Actuator 22L
12	13	Plain shaft, L=6,6 mm ø1,5 for gearheads 22E, 22EKV
14	15	Pinion for gearheads 22/2, 22/5
	16	Plain shaft, L=8,1 mm ø2 mm for gearheads 20/1R, 22/7, 23/1, 22GPT and Linear Actuator 22L with encoder PE22-120
	17	Plain shaft, L=6,6 mm ø1,5 for gearheads 22E, 22EKV and encoder PE22-120
	18	Pinion for gearheads 22/2, 22/5 and encoder PE22-120

Connection

No.	Function
1	Phase A +
2	Phase A -
3	Phase B +
4	Phase B -

Option	Description
Single leads	PTFE single leads length 50/100/150/300 mm
Connector	PVC single leads length 50/100/150/300 mm or ETFE/PTFE single leads length 150 mm with connector Molex 51021-0400

Product combination

Precision Gearheads / Lead Screws	Encoders	Drive Electronics	Cables / Accessories
20/1R 22E 22EKV 22GPT 22/2 22/5 22/7 23/1 22L ... ML 22L ... SB 22L ... PB	PE22-120	MCST 3601	Detailed cable options can be found in Application Note AN 010 to be downloaded on FAULHABER website.

© DR. FRITZ FAULHABER GMBH & CO. KG
Specifications subject to change without notice.

Stepper Motors 22 mNm

Two phase, 24 steps per revolution

Series AM2224R3

Values at 20°C	AM2224R3	1000	0500	0250	0125	
Nominal current per phase (both phases ON)		1	0,5	0,25	0,125	A
Boosted current per phase (both phases ON)		2	1	0,5	0,25	A
Nominal voltage per phase (both phases ON)		1,4	3	6	12	V
Phase resistance		0,9	4,8	18	75	Ω
Phase inductance (1 kHz)		0,9	4,3	16,3	65,6	mH
Holding torque (at nominal current in both phases)		22	22	22	22	mNm
Holding torque at boosted current		37	37	37	37	mNm
Residual torque, typ.		1,47	1,47	1,47	1,47	mNm
Back-EMF amplitude		3,8	8,3	16,3	32,7	V/k step/s
Electrical time constant	0,92					ms
Rotor inertia	$253 \cdot 10^{-9}$					kgm²
Step angle (full step)	15					°
Angular accuracy	±10					%
Angular acceleration, max.	$146 \cdot 10^{3}$					rad/s²
Resonance frequency (at no load)	45					Hz
Thermal resistance	4,8 / 20,4					K/W
Thermal time constant	10 / 620					s
Operating temperature range	-35 ... +70					°C
Winding temperature, max.	+130					°C
Shaft bearings [1] [2]	ball bearings, preloaded					
	(Bearing code: R3)					
Shaft load max.:						
– with shaft diameter	3					mm
– radial at 5 000 min^{-1} (3 mm from bearing)	20					N
– axial at 5 000 min^{-1}	4					N
– axial at standstill	56,5					N
Shaft play:						
– radial	0,015					mm
– axial	0					mm
Housing material	aluminium, black anodized					
Mass	50,5					g
Magnet material	NdFeB					

[1] Special lubricant options available on request.
[2] 2 preloaded ball bearings available on request for vacuum / low temperature (bearing code: RC).

Driver settings

Relevant for 2 phases ON only.
On PWM drivers or chopper (current mode), the current is set to the nominal value and the supply voltage is typically 4 to 8x higher than the nominal voltage.

Curves measured with a load inertia of $600 \cdot 10^{-9}$ kgm², in half-step mode for the "1 x nominal voltage" curve, in 1/4 micro-stepping mode for the other curves.

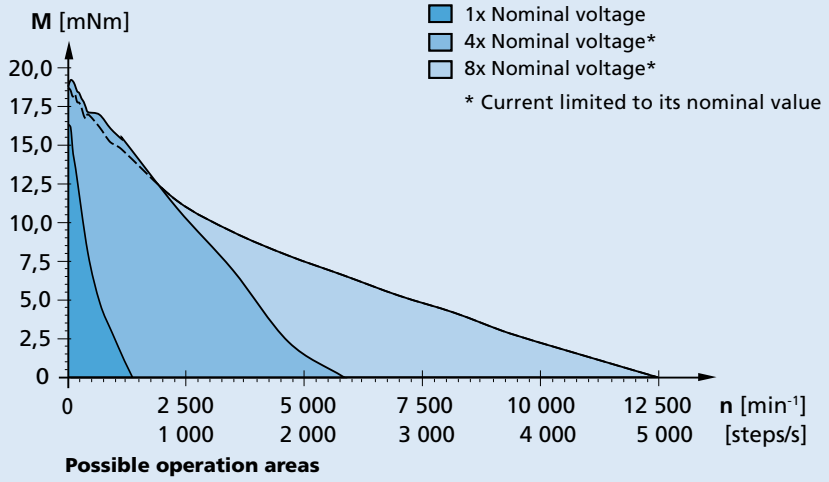

© DR. FRITZ FAULHABER GMBH & CO. KG
Specifications subject to change without notice.
www.faulhaber.com

Dimensional drawing

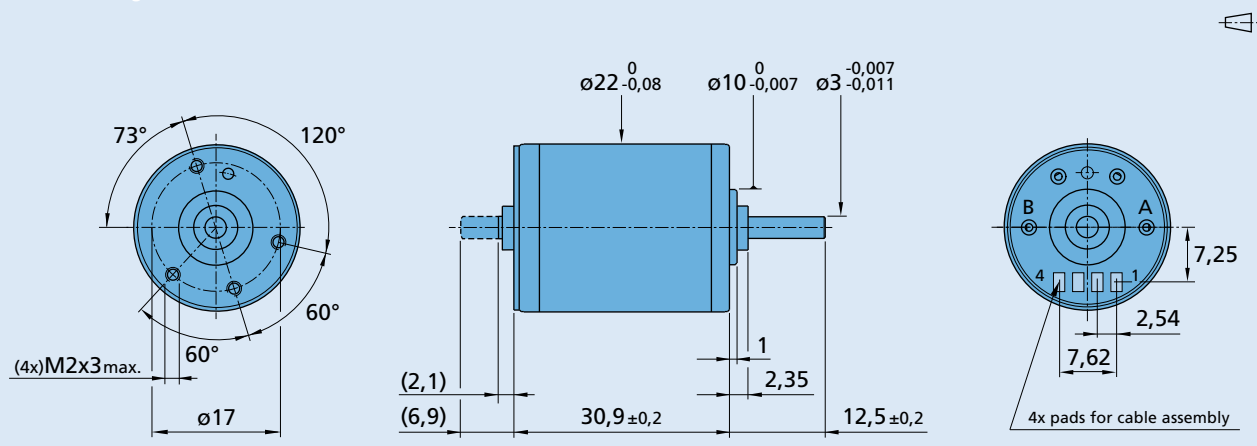

AM2224R3

Option, cable and connection information

Example product designation: **AM2224R3025031**

Motor executions front shaft	Motor executions double shaft	Front shaft description
30	31	Plain shaft for gearheads 26/1R
85	84	Plain shaft for lead screw M3
	36	Plain shaft for gearheads 26/1R or encoder PE22-120
	86	Plain shaft for lead screw M3 and encoder PE22-120

Connection

No.	Function
1	Phase A +
2	Phase A -
3	Phase B +
4	Phase B -

Option	Description
Single leads	PTFE single leads length 50/100/150/300 mm
Connector	PVC single leads length 50/100/150/300 mm or ETFE/PTFE single leads length 150 mm with connector Molex 51021-0400

Product combination

Precision Gearheads / Lead Screws	Encoders	Drive Electronics	Cables / Accessories
26/1R M3 x 0,5 x L1	PE22-120	MCST 3601	Detailed cable options can be found in Application Note AN 010 to be downloaded on FAULHABER website.

© DR. FRITZ FAULHABER GMBH & CO. KG
Specifications subject to change without notice.

Stepper Motors 85 mNm

Two phase, 48 steps per revolution

Series AM3248

Values at 20°C	AM3248	0700	
Nominal current per phase (both phases ON)		0,7	A
Boosted current per phase (both phases ON)		1,4	A
Phase resistance		1,9	Ω
Phase inductance (1 kHz)		5,2	mH
Holding torque (at nominal current in both phases)		85	mNm
Holding torque at boosted current		152	mNm
Residual torque, typ.		16	mNm
Back-EMF amplitude		7,8	V/k step/s
Electrical time constant	2,7		ms
Rotor inertia	$900 \cdot 10^{-9}$		kgm²
Step angle (full step)	7,5		°
Angular accuracy	±12		%
Angular acceleration, max.	$169 \cdot 10^{3}$		rad/s²
Resonance frequency (at no load)	49		Hz
Thermal resistance	3,4 / 9		K/W
Thermal time constant	19 / 900		s
Operating temperature range	-35 ... +70		°C
Winding temperature, max.	+130		°C
Shaft bearings [1] [2]	ball bearings, preloaded		
	(Bearing code: 2R)		
Shaft load max.:			
– with shaft diameter	5		mm
– radial at 5 000 min^{-1} (13 mm from bearing)	50		N
– axial at 5 000 min^{-1}	10		N
– axial at standstill	140		N
Shaft play:			
– radial	0,015		mm
– axial	0		mm
Housing material	aluminium, black anodized		
Mass	160		g
Magnet material	NdFeB		

[1] Special lubricant options available on request.
[2] 2 preloaded ball bearings available on request for vacuum / low temperature (bearing code: RC).

Driver settings

Curves measured with a load inertial of 1.49 10^{-5} kgm² on the AM32482R070000 motor using a Trinamic TMCM-1260 controller with 256 micro-steps per full step and RMS current of 700mA.

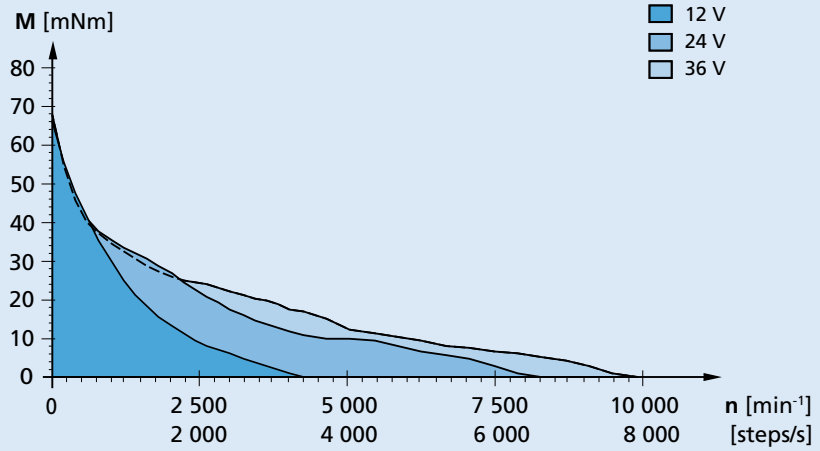

Possible operation areas

© DR. FRITZ FAULHABER GMBH & CO. KG
Specifications subject to change without notice.

Dimensional drawing

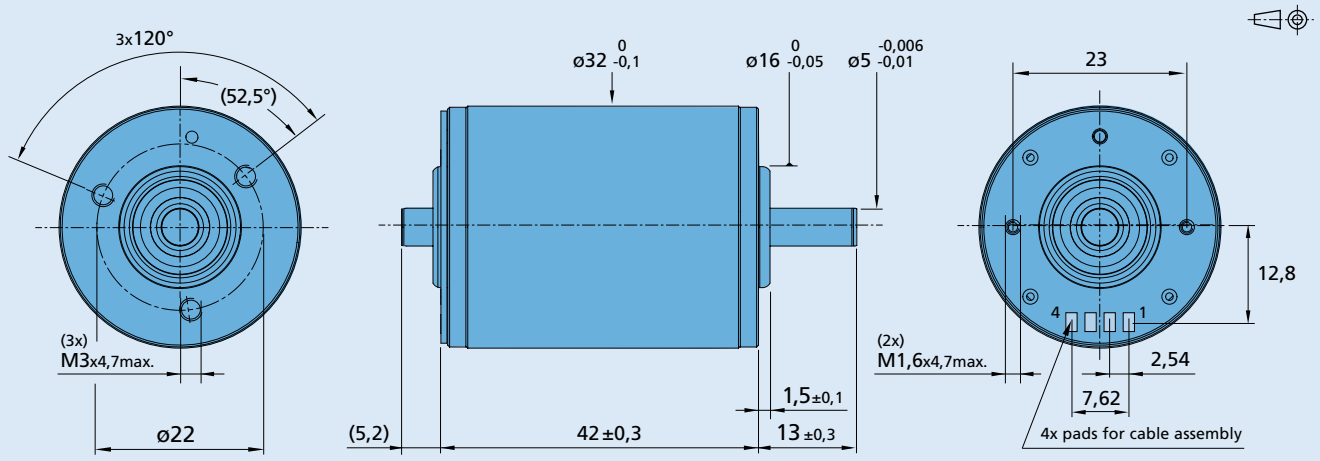

AM3248

Options and connection information

Example product designation: **AM32482R070010**

Motor executions front shaft	Motor executions double shaft	Front shaft description
00		Plain shaft (in case of a combination with encoder IE3-1024 an additional motor cable is mandatory)
10		Plain shaft for gearheads 32GPT and Linear Actuator 32L (in case of a combination with encoder IE3-1024 an additional motor cable is mandatory)

Connection

No.	Function
1	Phase A +
2	Phase A -
3	Phase B +
4	Phase B -

Option	Description
Single leads	PTFE single leads length 50/100/150/300 mm
Connector	PVC single leads length 50/100/150/300 mm or ETFE/PTFE single leads length 150 mm with connector Molex 51021-0400

Product combination

Precision Gearheads / Lead Screws	Encoders	Drive Electronics	Cables / Accessories
32GPT 32L ... TL 32L ... ML 32L ... SB 32L ... PB	IE3-1024	MCST 3601	Detailed cable options can be found in Application Note AN 010 to be downloaded on FAULHABER website.

© DR. FRITZ FAULHABER GMBH & CO. KG
Specifications subject to change without notice.

Stepper Motors 62 mNm

Two phase with Disc Magnet,
100 steps per revolution, microstepping motor

Series DM40100R

Values at 20°C	DM40100R	2630		1550		0940		
Connection		Parallel	Serial	Parallel	Serial	Parallel	Serial	
Nominal current per phase (1 phases ON)		2,63	1,32	1,55	0,78	0,94	0,47	A
Boosted current per phase (1 phases ON)		5,09	2,55	4,6	2,3	1,81	0,91	A
Phase resistance		0,9	3,8	2,9	11,8	7,5	30	Ω
Phase inductance (1 kHz)		1,15	4,6	3,3	13,2	9	36	mH
Holding torque at nominal current (1 phases ON)		62	62	62	62	62	62	mNm
Holding torque at boosted current		120	120	120	120	120	120	mNm
Residual torque, typ.		3	3	3	3	3	3	mNm
Back-EMF amplitude		1,47	2,95	2,5	5	4,14	8,27	V/k step/s
Electrical time constant		1,2						ms
Rotor inertia		$2{,}7 \cdot 10^{-7}$						kgm²
Step angle (full step)		3,6						°
Angular accuracy		±6						%
Angular acceleration, max.		$444 \cdot 10^{3}$						rad/s²
Speed up to		10 000						min^{-1}
Resonance frequency (at no load)		75						Hz
Thermal resistance		14						K/W
Thermal time constant		12						min
Operating temperature range		-20 ... +50						°C
Winding temperature, max.		+130						°C
Shaft bearings		ball bearings						
		(Bearing code: 2R)						
Shaft load max.:								
– with shaft diameter		5						mm
– radial at 5 000 min^{-1} (5 mm from bearing)		29						N
– axial at 5 000 min^{-1}		8						N
– axial at standstill		100						N
Shaft play:								
– radial		0,015						mm
– axial		0						mm
Housing material		Polyphenylensulfid (PPS)						
Mass		125						g
Magnet material		NdFeB						

Driver settings
Curve measured with a load inertia of $1{,}49 \cdot 10^{-5}$ kgm² on the DM40100R2R263000 motor using a Technosoft IDS640 controller in sin/cos control mode, 256 micro-steps per full step and a peak phase current of 2,63A.

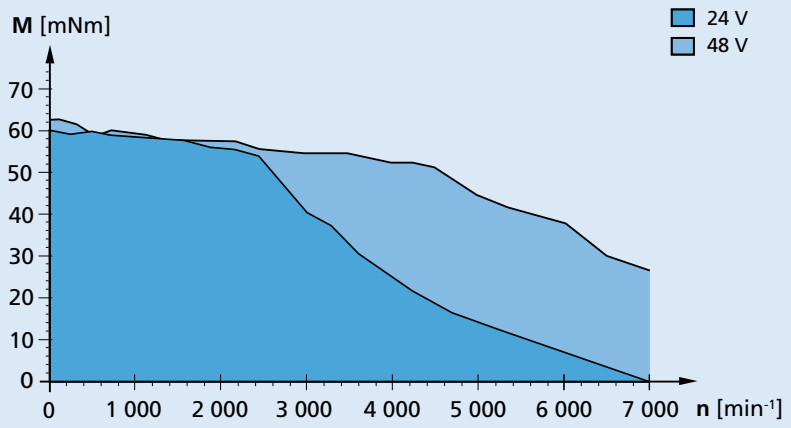

Possible operation areas

For notes on technical data and lifetime performance refer to "Technical Information".

Edition 2022 Nov. 25

Backwards

© DR. FRITZ FAULHABER GMBH & CO. KG
Specifications subject to change without notice.

www.faulhaber.com

Dimensional drawing

Scale reduced

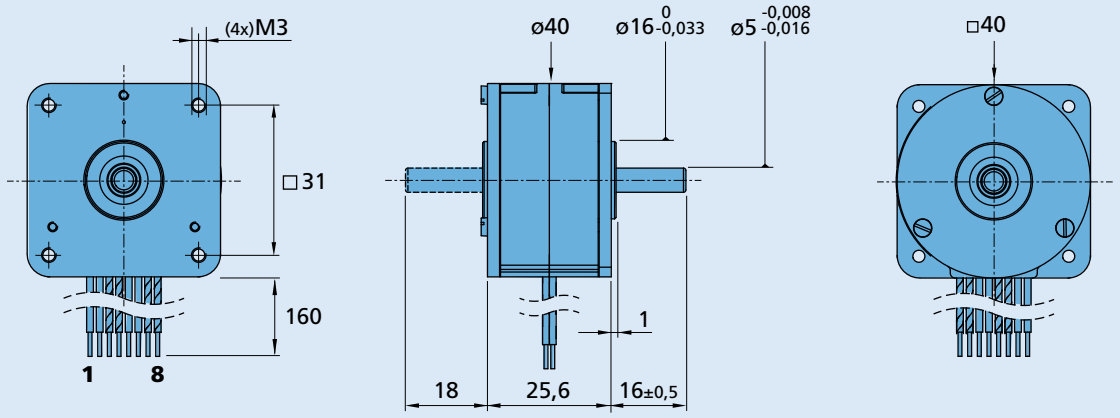

DM40100R

Options and connection information

Example product designation: **DM40100R2R155000**

Motor executions front shaft	Motor executions double shaft	Front shaft description
00	01	Plain shaft, L=16mm
	02	Plain shaft, L=16mm, for encoder

Parallel connection

No.	Colour	Phase
1	brown	A+
2	orange	A+
3	brown-white	A-
4	orange-white	A-
5	red	B+
6	yellow	B+
7	red-white	B-
8	yellow-white	B-

Product combination

Precision Gearheads / Lead Screws	Encoders	Drive Electronics	Cables / Accessories
	IE3-1024		

© DR. FRITZ FAULHABER GMBH & CO. KG
Specifications subject to change without notice.

Stepper Motors 200 mNm

Two phase with Disc Magnet,
100 steps per revolution

Series DM52100N

Values at 20°C	DM52100N	5300		2000		
Connection		Parallel	Serial	Parallel	Serial	
Nominal current per phase (1 phases ON)		5,3	2,6	2	1	A
Boosted current per phase (1 phases ON)		12,2	6,1	4,6	2,3	A
Phase resistance		0,35	1,4	2,2	8,8	Ω
Phase inductance (1 kHz)		0,7	2,8	5	20	mH
Holding torque at nominal current (1 phases ON)		200	200	200	200	mNm
Holding torque at boosted current		450	450	450	450	mNm
Residual torque, typ.		20	20	20	20	mNm
Back-EMF amplitude		2,38	4,76	6,3	12,6	V/k step/s
Electrical time constant	2					ms
Rotor inertia	$9{,}4 \cdot 10^{-7}$					kgm²
Step angle (full step)	3,6					°
Angular accuracy	±6					%
Angular acceleration, max.	$478 \cdot 10^{3}$					rad/s²
Speed up to	5 000					min⁻¹
Resonance frequency (at no load)	75					Hz
Thermal resistance	7,3					K/W
Thermal time constant	18					min
Operating temperature range	-20 ... +50					°C
Winding temperature, max.	+130					°C
Shaft bearings	ball bearings					
	(Bearing code: 2R)					
Shaft load max.:						
– with shaft diameter	5					mm
– radial at 5 000 min⁻¹ (5 mm from bearing)	54					N
– axial at 5 000 min⁻¹	12					N
– axial at standstill	167					N
Shaft play:						
– radial	0,015					mm
– axial	0					mm
Housing material	Polyphenylensulfid (PPS)					
Mass	250					g
Magnet material	NdFeB					

Driver settings
Curve measured with a load inertia of $3{,}96 \cdot 10^{-5}$ kgm² on the DM52100N2R530000 motor using a Technosoft IDS640 controller in sin/cos control mode, 256 micro-steps per full step and a peak phase current of 5,3A.

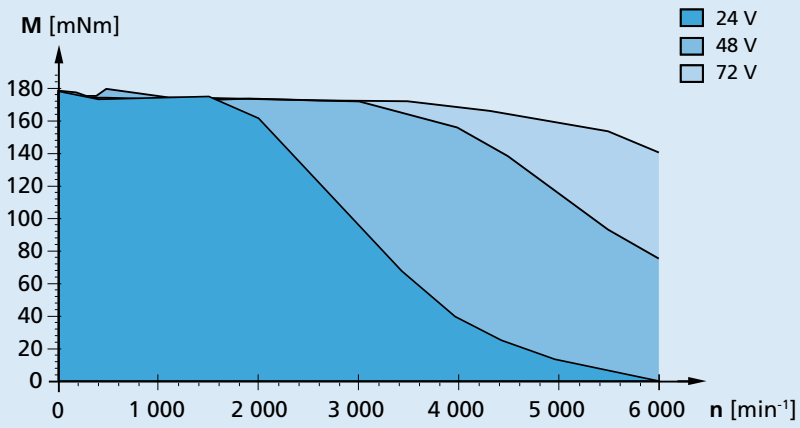

Possible operation areas

© DR. FRITZ FAULHABER GMBH & CO. KG
Specifications subject to change without notice.

Dimensional drawing

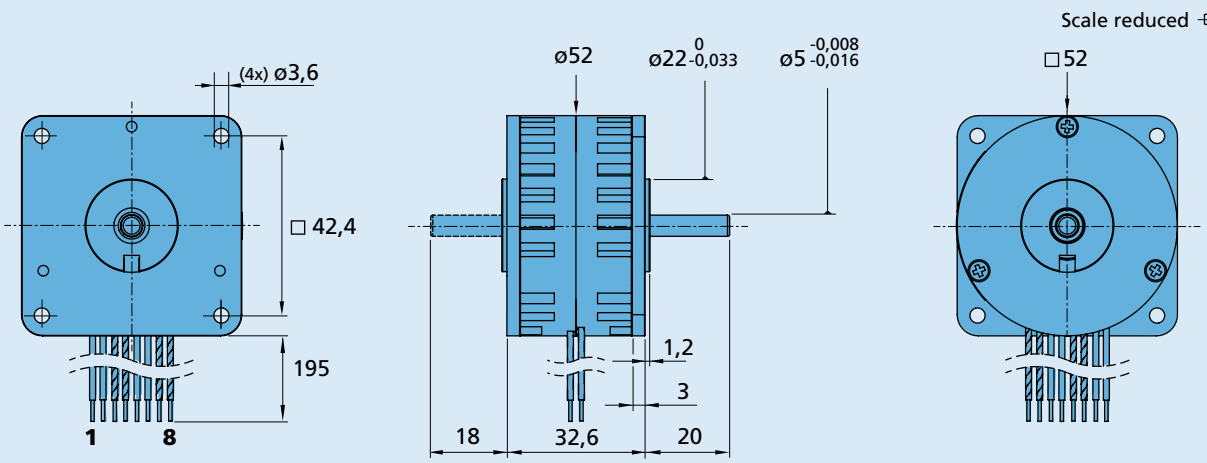

DM52100N

Options and connection information

Example product designation: **DM52100N2R530000**

Motor executions front shaft	Motor executions double shaft	Front shaft description
00	01	Plain shaft, L=20mm
	02	Plain shaft, L=20mm, for encoder

Parallel connection

No.	Colour	Phase
1	brown	A+
2	orange	A+
3	brown-white	A-
4	orange-white	A-
5	red	B+
6	yellow	B+
7	red-white	B-
8	yellow-white	B-

Product combination

Precision Gearheads / Lead Screws	Encoders	Drive Electronics	Cables / Accessories
	IE3-1024		

© DR. FRITZ FAULHABER GMBH & CO. KG
Specifications subject to change without notice.

Stepper Motors 180 mNm

Two phase with Disc Magnet,
100 steps per revolution, microstepping motor

Series DM52100R

Values at 20°C	DM52100R	5300		2000		
Connection		Parallel	Serial	Parallel	Serial	
Nominal current per phase (1 phases ON)		5,3	2,6	2	1	A
Boosted current per phase (1 phases ON)		12,2	6,1	4,6	2,3	A
Phase resistance		0,35	1,4	2,2	8,8	Ω
Phase inductance (1 kHz)		0,7	2,8	5	20	mH
Holding torque at nominal current (1 phases ON)		180	180	180	180	mNm
Holding torque at boosted current		400	400	400	400	mNm
Residual torque, typ.		10	10	10	10	mNm
Back-EMF amplitude		2,15	4,3	5,65	11,4	V/k step/s
Electrical time constant	2					ms
Rotor inertia	$9{,}4 \cdot 10^{-7}$					kgm²
Step angle (full step)	3,6					°
Angular accuracy	±6					%
Angular acceleration, max.	$425 \cdot 10^{3}$					rad/s²
Speed up to	5 000					min⁻¹
Resonance frequency (at no load)	70					Hz
Thermal resistance	7,3					K/W
Thermal time constant	18					min
Operating temperature range	-20 ... +50					°C
Winding temperature, max.	+130					°C
Shaft bearings	ball bearings					
	(Bearing code: 2R)					
Shaft load max.:						
– with shaft diameter	5					mm
– radial at 5 000 min⁻¹ (5 mm from bearing)	54					N
– axial at 5 000 min⁻¹	12					N
– axial at standstill	167					N
Shaft play:						
– radial	0,015					mm
– axial	0					mm
Housing material	Polyphenylensulfid (PPS)					
Mass	250					g
Magnet material	NdFeB					

Driver settings
Curve measured with a load inertia of $3{,}96 \cdot 10^{-5}$ kgm² on the DM52100R2R530000 motor using a Technosoft IDS640 controller in sin/cos control mode, 256 micro-steps per full step and a peak phase current of 5,3A.

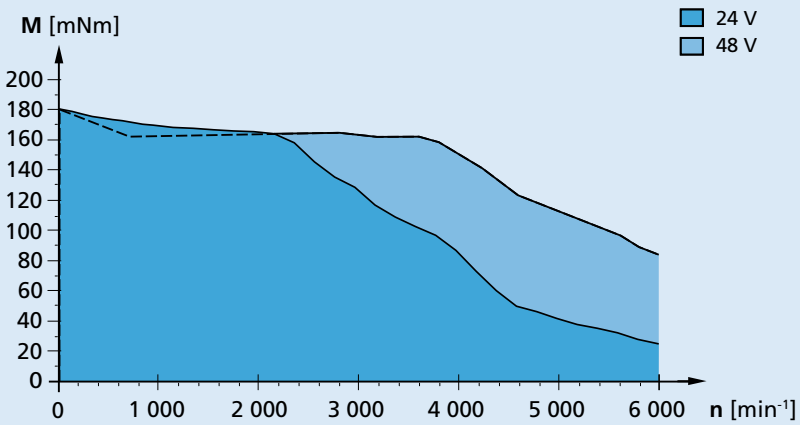

Possible operation areas

© DR. FRITZ FAULHABER GMBH & CO. KG
Specifications subject to change without notice.
www.faulhaber.com

Dimensional drawing

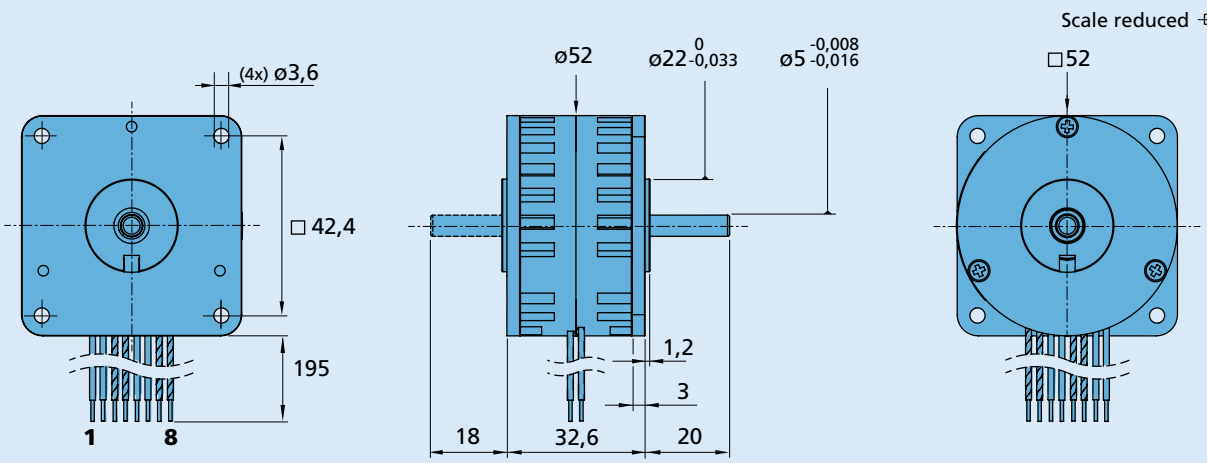

DM52100R

Options and connection information

Example product designation: **DM52100R2R530000**

Motor executions front shaft	Motor executions double shaft	Front shaft description
00	01	Plain shaft, L=20mm
	02	Plain shaft, L=20mm, for encoder

Parallel connection

No.	Colour	Phase
1	brown	A+
2	orange	A+
3	brown-white	A-
4	orange-white	A-
5	red	B+
6	yellow	B+
7	red-white	B-
8	yellow-white	B-

Product combination

Precision Gearheads / Lead Screws	Encoders	Drive Electronics	Cables / Accessories
	IE3-1024		

© DR. FRITZ FAULHABER GMBH & CO. KG
Specifications subject to change without notice.

Stepper Motors 116 mNm

Two phase with Disc Magnet,
100 steps per revolution

Series DM52100S

Values at 20°C	DM52100S	3300	1300	
Nominal current per phase (1 phases ON)		3,3	1,3	A
Boosted current per phase (1 phases ON)		5	1,9	A
Phase resistance		0,7	4,4	Ω
Phase inductance (1 kHz)		1,3	8	mH
Holding torque at nominal current (1 phases ON)		116	116	mNm
Holding torque at boosted current		174	174	mNm
Residual torque, typ.		7	7	mNm
Back-EMF amplitude		2,2	5,82	V/k step/s
Electrical time constant	1,8			ms
Rotor inertia	$8 \cdot 10^{-7}$			kgm²
Step angle (full step)	3,6			°
Angular accuracy	±6			%
Angular acceleration, max.	$217 \cdot 10^{3}$			rad/s²
Speed up to	5 000			min^{-1}
Resonance frequency (at no load)	60			Hz
Thermal resistance	10			K/W
Thermal time constant	14			min
Operating temperature range	-20 ... +50			°C
Winding temperature, max.	+130			°C
Shaft bearings	ball bearings			
	(Bearing code: 2R)			
Shaft load max.:				
– with shaft diameter	5			mm
– radial at 5 000 min^{-1} (5 mm from bearing)	54			N
– axial at 5 000 min^{-1}	12			N
– axial at standstill	167			N
Shaft play:				
– radial	0,015			mm
– axial	0			mm
Housing material	Polyphenylensulfid (PPS)			
Mass	185			g
Magnet material	NdFeB			

Driver settings
Curve measured with a load inertia of $1{,}49 \cdot 10^{-5}$ kgm² on the DM52100S2R330000 motor using a Technosoft IDS640 controller in sin/cos control mode, 256 micro-steps per full step and a peak phase current of 3,3A.

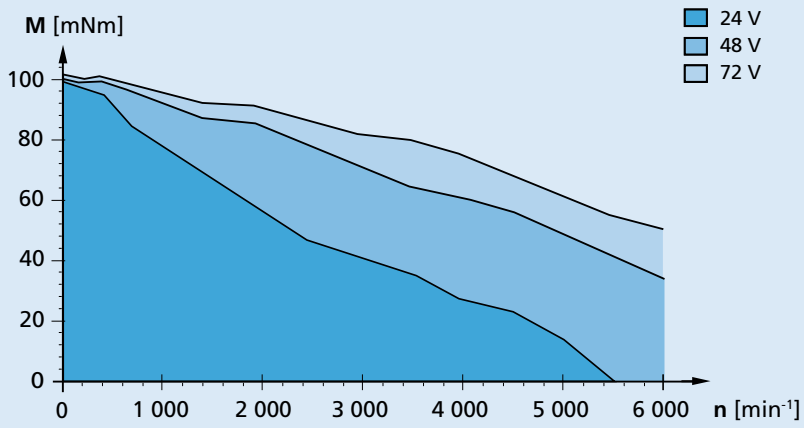

Possible operation areas

For notes on technical data and lifetime performance refer to "Technical Information".

Backwards

© DR. FRITZ FAULHABER GMBH & CO. KG
Specifications subject to change without notice.

Dimensional drawing

Scale reduced

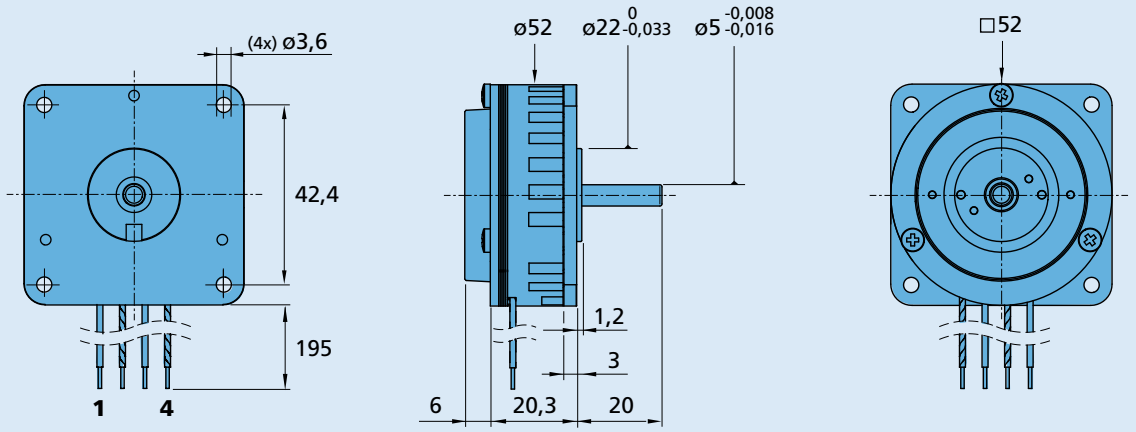

DM52100S

Options and connection information

Example product designation: **DM52100S2R330000**

Motor executions front shaft	Motor executions double shaft	Front shaft description
00		Plain shaft, L=20mm

Connection

No.	Colour	Phase
1	orange	A+
2	orange-white	A-
3	yellow	B+
4	yellow-white	B-

Product combination

Precision Gearheads / Lead Screws	Encoders	Drive Electronics	Cables / Accessories

© DR. FRITZ FAULHABER GMBH & CO. KG
Specifications subject to change without notice.

Stepper Motors 307 mNm

Two phase, 200 steps per revolution

Series DM66200H

Values at 20°C	DM66200H	1000	
Nominal current per phase (both phases ON)		1	A
Boosted current per phase (both phases ON)		2	A
Phase resistance		3,8	Ω
Phase inductance (1 kHz)		2,3	mH
Holding torque (at nominal current in both phases)		307	mNm
Holding torque at boosted current		581	mNm
Residual torque, typ.		10	mNm
Back-EMF amplitude		4,4	V/k step/s
Electrical time constant	0,6		ms
Rotor inertia	$363 \cdot 10^{-7}$		kgm²
Step angle (full step)	1,8		°
Angular accuracy	±5		%
Angular acceleration, max.	$16 \cdot 10^{3}$		rad/s²
Resonance frequency (at no load)	15		Hz
Thermal resistance	1,4 / 6,9		K/W
Thermal time constant	16 / 1 000		s
Operating temperature range	-30 ... +70		°C
Winding temperature, max.	+130		°C
Shaft bearings	one ball bearing, preloaded		
	(Bearing code: 1R)		
Shaft load max.:			
– radial at 2 000 min^{-1}	300		N
– axial at 2 000 min^{-1}	100		N
– axial at standstill	700		N
Shaft play:			
– radial	0,015		mm
– axial	0		mm
Housing material	aluminium, black anodized		
Mass	218		g
Magnet material	NdFeB		

Driver settings
Curve measured with a load inertia of $396 \cdot 10^{-7}$ kgm² on the DM66200H motor using a ISCM8005 controller in sin/cos control mode, 256 micro-steps per full step and a peak phase current of 1,41A.

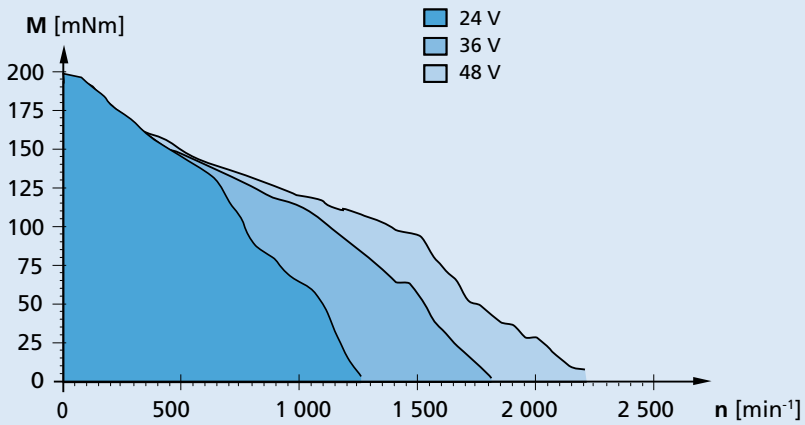

Possible operation areas

For notes on technical data and lifetime performance refer to "Technical Information".

Backwards

© DR. FRITZ FAULHABER GMBH & CO. KG
Specifications subject to change without notice.

Dimensional drawing

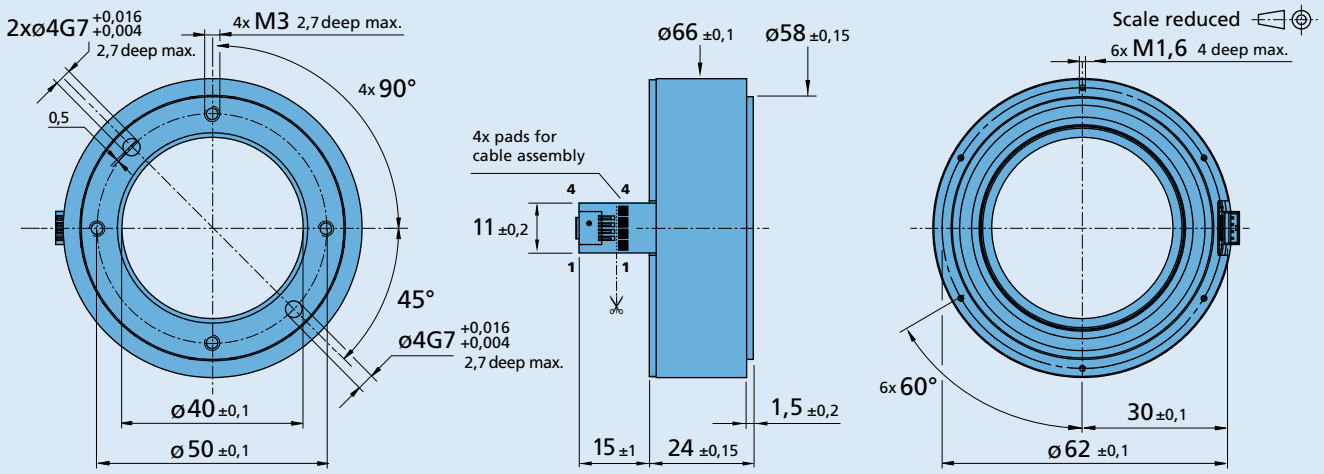

DM66200H

Options and connection information

Example product designation: **DM66200H1R100001**

Motor executions	Description
01	Motor with standard flexboard
02	Motor with 160 mm cables
11	Motor with standard flexboard and mounting flange
12	Motor with 160 mm cables and mounting flange

Connection

No.	Function
1	Phase A +
2	Phase A -
3	Phase B +
4	Phase B -

Standard cable
Flex PCB bending radius min. 3mm
Molex 874380443

Recommended connector
Molex 87439-0400 or similar.

Product combination

Precision Gearheads / Lead Screws	Encoders	Drive Electronics	Cables / Accessories
		MCST 3601	

© DR. FRITZ FAULHABER GMBH & CO. KG
Specifications subject to change without notice.

Linear DC-Servomotor

Linear DC-Servomotors

LM 0830...01	with analog Hall Sensors	1.03 N
LM 1247...11	with analog Hall Sensors	3.6 N
LM 1247...12	for sin/cos control	3.6 N
LM1483...11	with analog Hall Sensors	6.2 N
LM1483...12	for sin/cos control	6.2 N
LM 2070...11	with analog Hall Sensors	9.2 N
LM 2070...12	for sin/cos control	9.2 N

Backwards

Linear DC-Servomotors 1,03 N

with Analog Hall Sensors

LM 0830 ... 01

Values at 22°C	LM 0830 ... 01		
Continuous force	$F_{e\ max.}$	1,03	N
Peak force	$F_{p\ max.}$	2,74	N
Continuous current	$I_{e\ max.}$	0,53	A
Peak current	$I_{p\ max.}$	1,41	A
Back-EMF constant	k_E	1,58	V/m/s
Force constant	k_F	1,94	N/A
Terminal resistance, phase-phase	R	7,37	Ω
Terminal inductance, phase-phase	L	117	µH
Thermal resistance	R_{th1} / R_{th2}	6,6 / 37,4	K/W
Thermal time constant	τ_{w1} / τ_{w2}	4 / 291	s
Operating temperature range		-20 … +125	°C
Magnetic pitch	τ_m	12	mm
Rod bearings		polymer sleeves	
Housing material		metal, non-magnetic	
Direction of movement		electronically reversible	

		015-01	040-01	
Stroke length	$S_{max.}$	15	40	mm
Repeatability	σ_r	40	40	µm
Accuracy	σ_a	120	140	µm
Acceleration	$a_{e\ max.}$	206,9	147,8	m/s²
Speed	$v_{e\ max.}$	1,8	2,4	m/s
Rod length	$L1$	58	82	mm
Rod mass	m_m	5	7	g
Total mass	m_t	15	17	g

Note: These motors are for operation with DC-voltage < 50 V DC. The given values are for free standing motors.
Other rod lengths available on request.

Motor characteristic curves

Trapezoidal motion profile (t1 = t2 = t3)

Displacement distance:	15mm
Friction coefficient:	0,2
Slope angle:	0°
Rest time:	0,1 s

Load:
The max. applicable load (incl. rod) at a given speed with an external force of 0 N

External force:
The max. permissible external force at a given speed with a load (incl. rod) of:

- 0,035 kg
- 0,05 kg
- 0,1 kg

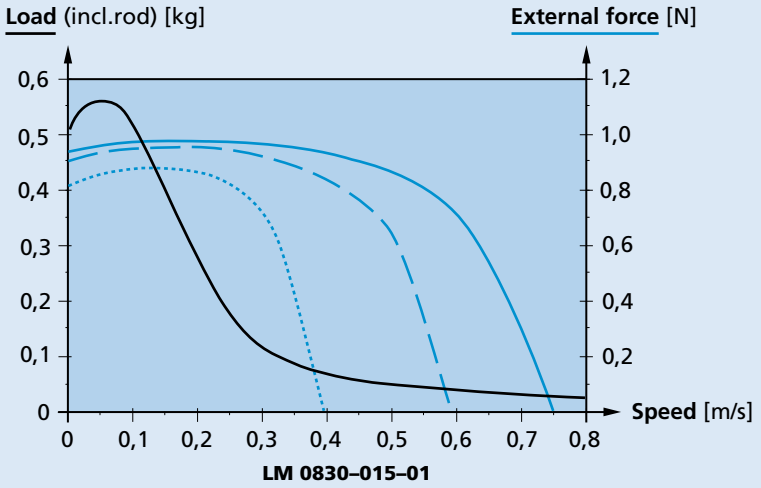

© DR. FRITZ FAULHABER GMBH & CO. KG
Specifications subject to change without notice.
www.faulhaber.com

Dimensional drawing

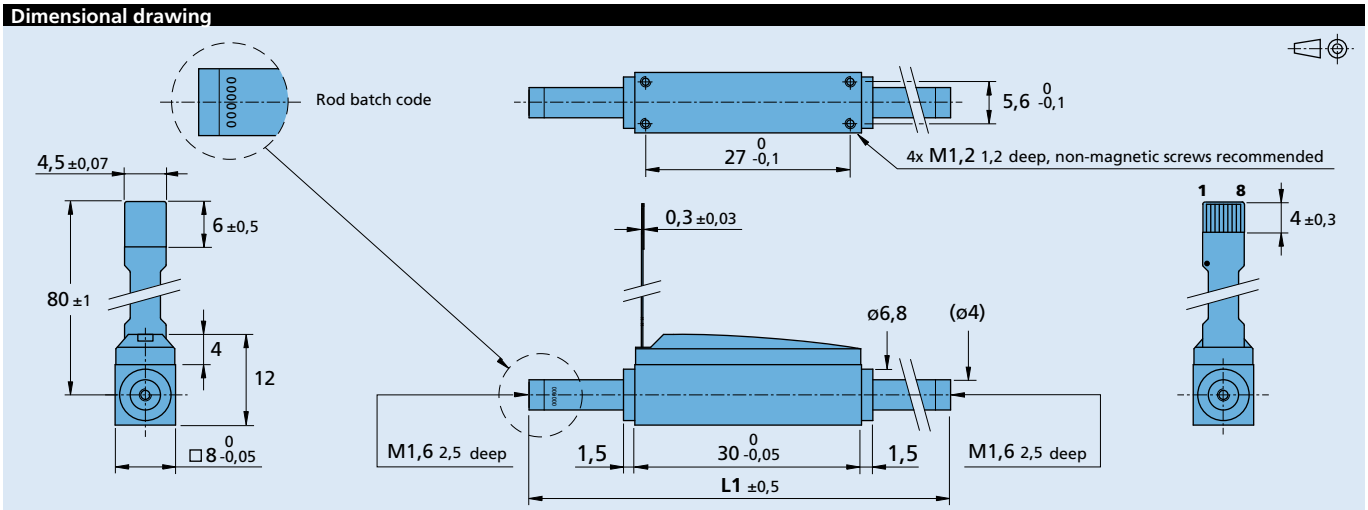

LM 0830 ... 01

Option, cable and connection information

Example product designation: **LM0830-015-01**

Option	Type	Description

Connection

No.	Function
1	Phase C
2	Phase B
3	Phase A
4	GND
5	U_{DD} (+5V)
6	Hall sensor C
7	Hall sensor B
8	Hall sensor A

Flexboard

8 circuits; 0,5mm pitch
Recommended connector
Molex - ZIF connector,
Nr. 52746

Product combination

Drive Electronics	Cables / Accessories		
MC 3001 B MC 3001 P MC 5004 P	To view our large range of accessory parts, please refer to the “Accessories” chapter.		

© DR. FRITZ FAULHABER GMBH & CO. KG
Specifications subject to change without notice.

Linear DC-Servomotors 3,6 N

with Analog Hall Sensors

LM 1247 ... 11

Values at 22°C	LM 1247 ... 11		
Continuous force	$F_{e\ max.}$	3,6	N
Peak force	$F_{p\ max.}$	10,5	N
Continuous current	$I_{e\ max.}$	0,55	A
Peak current	$I_{p\ max.}$	1,64	A
Back-EMF constant	k_E	5,25	V/m/s
Force constant	k_F	6,43	N/A
Terminal resistance, phase-phase	R	13,17	Ω
Terminal inductance, phase-phase	L	820	µH
Thermal resistance	R_{th1} / R_{th2}	3,2 / 20	K/W
Thermal time constant	τ_{w1} / τ_{w2}	11 / 624	s
Operating temperature range		-20 … +125	°C
Magnetic pitch	τ_m	18	mm
Rod bearings		polymer sleeves	
Housing material		metal, non-magnetic	
Direction of movement		electronically reversible	

	LM 1247-	020-11	040-11	060-11	080-11	100-11	120-11	
Stroke length	$S_{max.}$	20	40	60	80	100	120	mm
Repeatability	σ_r	40	40	40	40	40	40	µm
Accuracy	σ_a	120	140	160	180	200	220	µm
Acceleration	$a_{e\ max.}$	187,6	142,5	122,9	101,8	91,4	81	m/s²
Speed	$v_{e\ max.}$	1,9	2,4	2,7	2,9	3	3,1	m/s
Rod length	$L1$	82	109	127	154	172	190	mm
Rod mass	m_m	19	25	29	35	39	44	g
Total mass	m_t	58	64	68	74	78	83	g

Note: These motors are for operation with DC-voltage < 75 V DC. The given values are for free standing motors.
Other rod lengths available on request.

Motor characteristic curves

Trapezoidal motion profile (t1 = t2 = t3)

Displacement distance:	20 mm
Friction coefficient:	0,2
Slope angle:	0°
Rest time:	0,1 s

Load:
The max. applicable load (incl. rod) at a given speed with an external force of 0 N

External force:
The max. permissible external force at a given speed with a load (incl. rod) of:

- 0,1 kg
- 0,2 kg
- 0,5 kg

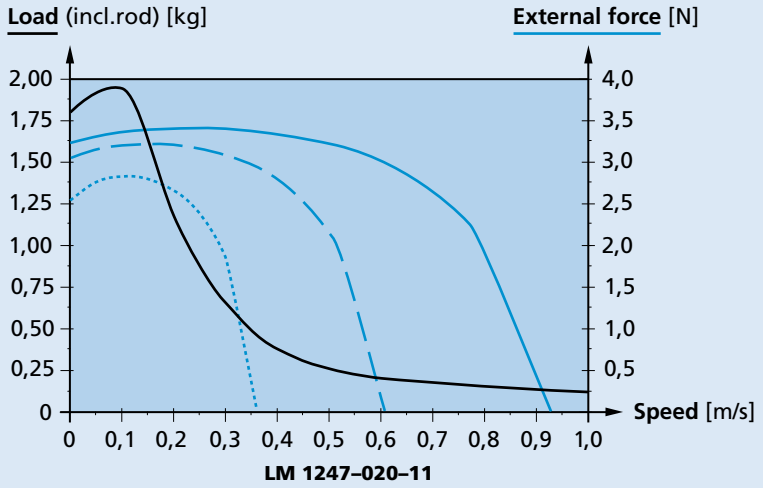

LM 1247–020–11

© DR. FRITZ FAULHABER GMBH & CO. KG
Specifications subject to change without notice.
www.faulhaber.com

Dimensional drawing

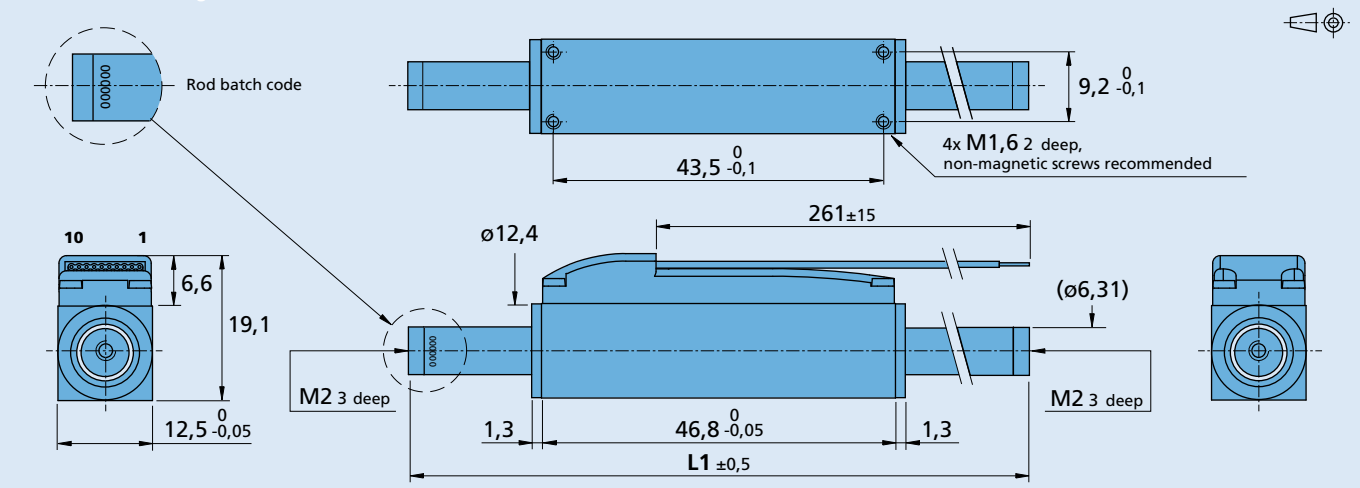

LM 1247 ... 11

Option, cable and connection information

Example product designation: **LM1247-020-11**

Option	Type	Description
-11C	Connector 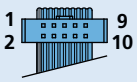	Material PVC, 10 conductors, AWG 28 with connector A05a - TCO, pitch 2 mm

Connection -11/-11C

No.	Function
1	Phase C
2	Phase B
3	Phase A
4	GND
5	U_{DD} (+5V)
6	Hall sensor C
7	Hall sensor B
8	Hall sensor A
9	N.C.
10	N.C.

Standard cable

Material PVC,
10 conductors, AWG 28,
grid 1mm, wires tinned.

Product combination

Drive Electronics

MC 3001 B
MC 3001 P
MC 3603 S
MC 5004 P
MC 5005 S

Cables / Accessories

To view our large range of accessory parts, please refer to the “Accessories” chapter.

© DR. FRITZ FAULHABER GMBH & CO. KG
Specifications subject to change without notice.

Linear DC-Servomotors 3,6 N

for sin/cos control

LM 1247 ... 12

Values at 22°C	LM 1247 ... 12		
Continuous force	$F_{e\ max.}$	3,6	N
Peak force	$F_{p\ max.}$	10,5	N
Continuous current	$I_{e\ max.}$	0,55	A
Peak current	$I_{p\ max.}$	1,64	A
Back-EMF constant	k_E	5,25	V/m/s
Force constant	k_F	6,43	N/A
Terminal resistance, phase-phase	R	13,17	Ω
Terminal inductance, phase-phase	L	820	µH
Thermal resistance	R_{th1} / R_{th2}	3,2 / 20	K/W
Thermal time constant	τ_{w1} / τ_{w2}	11 / 624	s
Operating temperature range		-20 … +125	°C
Magnetic pitch	τ_m	18	mm
Rod bearings		polymer sleeves	
Housing material		metal, non-magnetic	
Direction of movement		electronically reversible	

	LM 1247-	020-12	040-12	060-12	080-12	100-12	120-12	
Stroke length	$S_{max.}$	20	40	60	80	100	120	mm
Repeatability	σ_r	80	80	80	80	80	80	µm
Accuracy	σ_a	200	220	240	260	280	300	µm
Acceleration	$a_{e\ max.}$	187,6	142,5	122,9	101,8	91,4	81	m/s²
Speed	$v_{e\ max.}$	1,9	2,4	2,7	2,9	3	3,1	m/s
Rod length	$L1$	82	109	127	154	172	190	mm
Rod mass	m_m	19	25	29	35	39	44	g
Total mass	m_t	58	64	68	74	78	83	g

Note: These motors are for operation with DC-voltage < 75 V DC. The given values are for free standing motors.
Other rod lengths available on request.

Motor characteristic curves

Trapezoidal motion profile (t1 = t2 = t3)

Displacement distance:	20 mm
Friction coefficient:	0,2
Slope angle:	0°
Rest time:	0,1 s

Load:
The max. applicable load (incl. rod) at a given speed with an external force of 0 N

External force:
The max. permissible external force at a given speed with a load (incl. rod) of:

- 0,1 kg
- 0,2 kg
- 0,5 kg

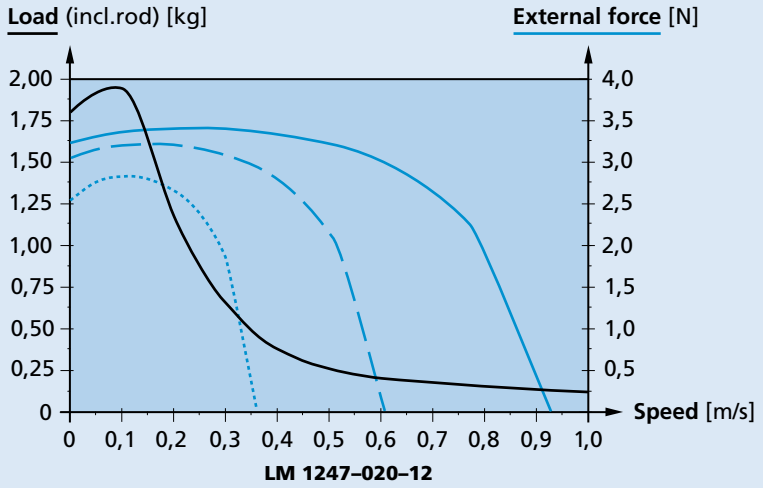

For notes on technical data and lifetime performance refer to "Technical Information".

Backwards

© DR. FRITZ FAULHABER GMBH & CO. KG
Specifications subject to change without notice.

Dimensional drawing

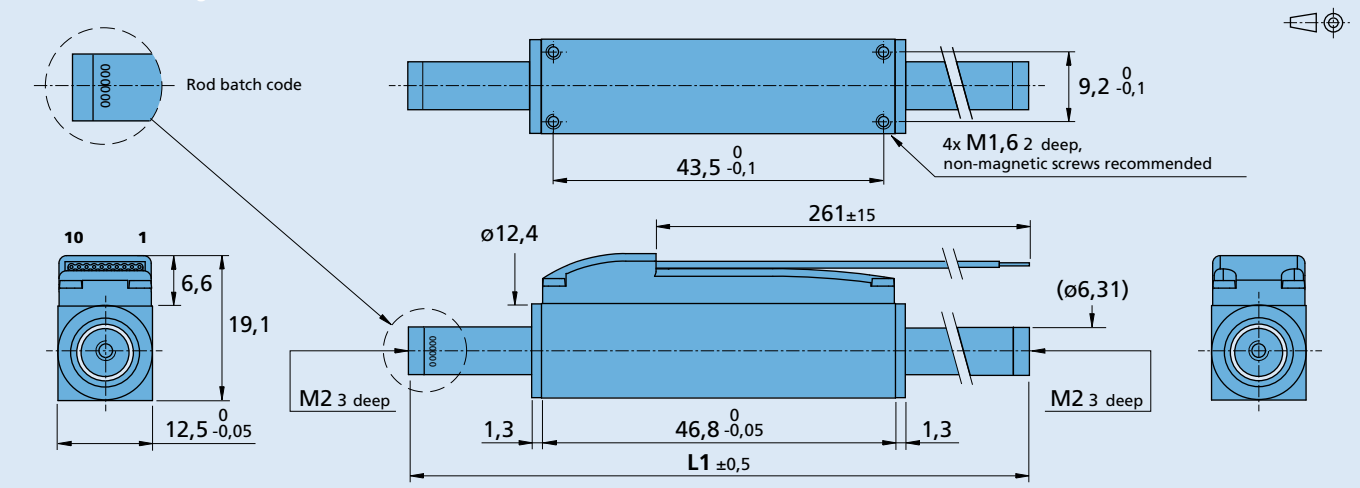

LM 1247 ... 12

Option, cable and connection information

Example product designation: **LM1247-020-12**

Option	Type	Description
-12C	Connector 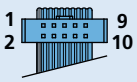	Material PVC, 10 conductors, AWG 28 with connector A05a - TCO, pitch 2 mm

Connection -12/-12C

No.	Function
1	Phase C
2	Phase B
3	Phase A
4	GND
5	U_{DD} (+5V)
6	Sin +
7	Sin -
8	Cos +
9	Cos -
10	N.C.

Standard cable

Material PVC,
10 conductors, AWG 28,
grid 1mm, wires tinned.

Product combination

Drive Electronics

Cables / Accessories

To view our large range of accessory parts, please refer to the "Accessories" chapter.

© DR. FRITZ FAULHABER GMBH & CO. KG
Specifications subject to change without notice.

Linear DC-Servomotors 6,2 N

with Analog Hall Sensors

LM 1483 ... 11

Values at 22°C	LM 1483 ... 11		
Continuous force	$F_{e\ max.}$	6,2	N
Peak force	$F_{p\ max.}$	18,4	N
Continuous current	$I_{e\ max.}$	0,5	A
Peak current	$I_{p\ max.}$	1,48	A
Back-EMF constant	k_E	10,16	V/m/s
Force constant	k_F	12,44	N/A
Terminal resistance, phase-phase	R	26,3	Ω
Terminal inductance, phase-phase	L	1 649	µH
Thermal resistance	R_{th1} / R_{th2}	1,97 / 12,5	K/W
Thermal time constant	τ_{w1} / τ_{w2}	12,2 / 789	s
Operating temperature range		-20 … +125	°C
Magnetic pitch	τ_m	18	mm
Rod bearings		polymer sleeves	
Housing material		metal, non-magnetic	
Direction of movement		electronically reversible	

	LM 1483-	020-11	040-11	060-11	080-11	
Stroke length	$S_{max.}$	20	40	60	80	mm
Repeatability	σ_r	40	40	40	40	µm
Accuracy	σ_a	120	140	160	180	µm
Acceleration	$a_{e\ max.}$	213,1	176,6	158,5	140,5	m/s²
Speed	$v_{e\ max.}$	2,1	2,7	3,1	3,4	m/s
Rod length	$L1$	127	154	172	190	mm
Rod mass	m_m	29	35	39	44	g
Total mass	m_t	117	124	128	132	g

Note: These motors are for operation with DC-voltage < 75 V DC. The given values are for free standing motors.
Other rod lengths available on request.

Motor characteristic curves

Trapezoidal motion profile (t1 = t2 = t3)

Displacement distance:	20 mm
Friction coefficient:	0,2
Slope angle:	0°
Rest time:	0,1 s

Load:
The max. applicable load (incl. rod) at a given speed with an external force of 0 N

External force:
The max. permissible external force at a given speed with a load (incl. rod) of:

- 0,15 kg
- 0,3 kg
- 0,6 kg

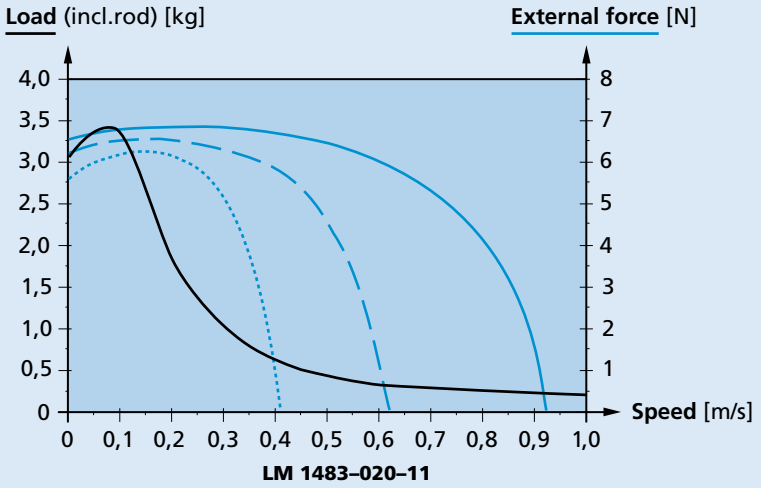

LM 1483–020–11

© DR. FRITZ FAULHABER GMBH & CO. KG
Specifications subject to change without notice.

Dimensional drawing

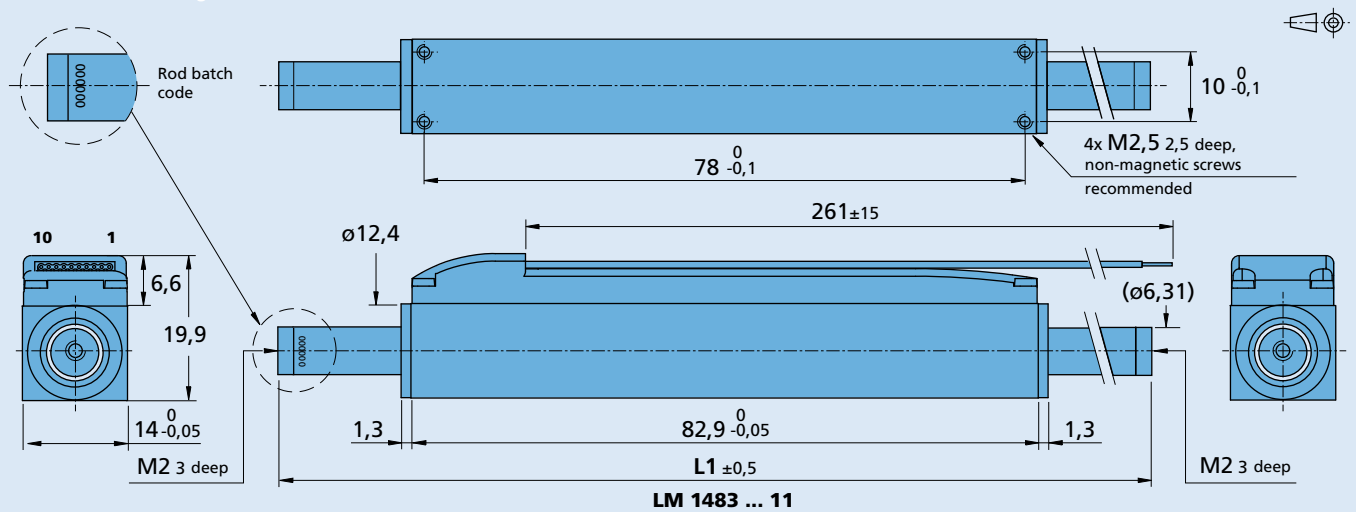

LM 1483 ... 11

Option, cable and connection information

Example product designation: **LM1483-020-11**

Option	Type	Description
-11C	Connector 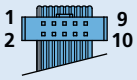	Material PVC, 10 conductors, AWG 28 with connector A05a - TCO, pitch 2 mm

Connection -11/-11C

No.	Function
1	Phase C
2	Phase B
3	Phase A
4	GND
5	U_{DD} (+5V)
6	Hall sensor C
7	Hall sensor B
8	Hall sensor A
9	N.C.
10	N.C.

Standard cable

Material PVC, 10 conductors, AWG 28, grid 1mm, wires tinned.

Product combination

Drive Electronics

MC 3001 B
MC 3001 P
MC 3603 S
MC 5004 P
MC 5005 S

Cables / Accessories

To view our large range of accessory parts, please refer to the “Accessories” chapter.

© DR. FRITZ FAULHABER GMBH & CO. KG
Specifications subject to change without notice.

Linear DC-Servomotors 6,2 N

for sin/cos control

LM 1483 ... 12

Values at 22°C	LM 1483 ... 12		
Continuous force	$F_{e\,max.}$	6,2	N
Peak force	$F_{p\,max.}$	18,4	N
Continuous current	$I_{e\,max.}$	0,5	A
Peak current	$I_{p\,max.}$	1,48	A
Back-EMF constant	k_E	10,16	V/m/s
Force constant	k_F	12,44	N/A
Terminal resistance, phase-phase	R	26,3	Ω
Terminal inductance, phase-phase	L	1 649	µH
Thermal resistance	R_{th1} / R_{th2}	1,97 / 12,5	K/W
Thermal time constant	τ_{w1} / τ_{w2}	12,2 / 789	s
Operating temperature range		-20 … +125	°C
Magnetic pitch	τ_m	18	mm
Rod bearings		polymer sleeves	
Housing material		metal, non-magnetic	
Direction of movement		electronically reversible	

	LM 1483-	020-12	040-12	060-12	080-12	
Stroke length	$S_{max.}$	20	40	60	80	mm
Repeatability	σ_r	80	80	80	80	µm
Accuracy	σ_a	200	220	240	260	µm
Acceleration	$a_{e\,max.}$	213,1	176,6	158,5	140,5	m/s²
Speed	$v_{e\,max.}$	2,1	2,7	3,1	3,4	m/s
Rod length	$L1$	127	154	172	190	mm
Rod mass	m_m	29	35	39	44	g
Total mass	m_t	117	124	128	132	g

Note: These motors are for operation with DC-voltage < 75 V DC. The given values are for free standing motors.
Other rod lengths available on request.

Motor characteristic curves

Trapezoidal motion profile (t1 = t2 = t3)

Displacement distance:	20 mm
Friction coefficient:	0,2
Slope angle:	0°
Rest time:	0,1 s

Load:
The max. applicable load (incl. rod) at a given speed with an external force of 0 N

External force:
The max. permissible external force at a given speed with a load (incl. rod) of:

- 0,15 kg
- 0,3 kg
- 0,6 kg

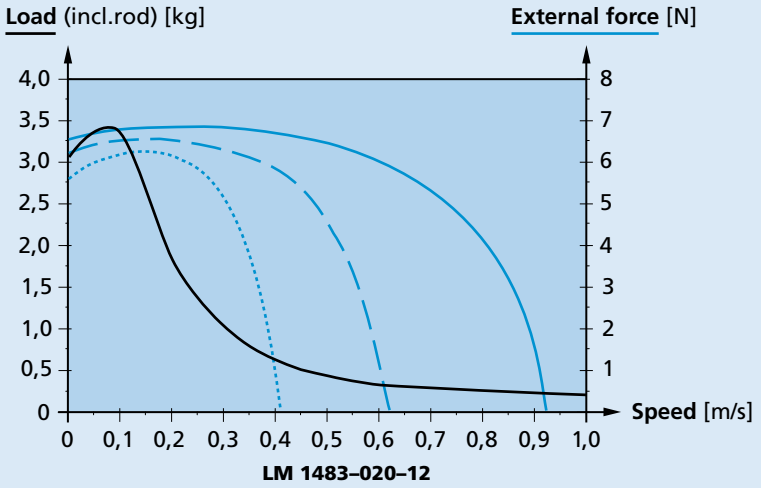

LM 1483–020–12

© DR. FRITZ FAULHABER GMBH & CO. KG
Specifications subject to change without notice.

Dimensional drawing

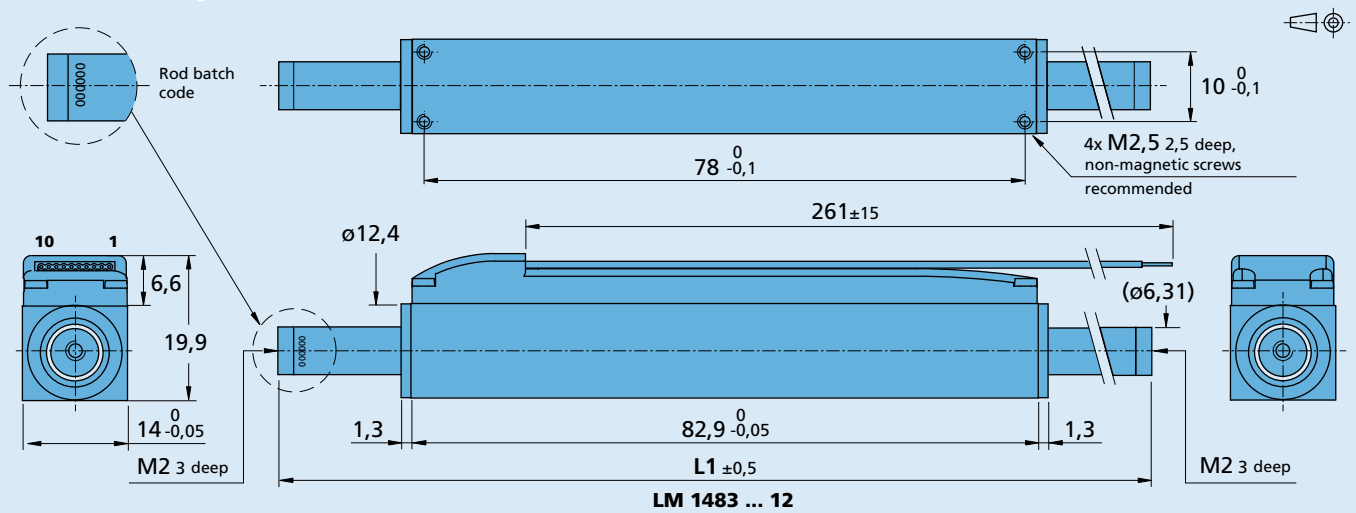

Option, cable and connection information

Example product designation: **LM1483-020-12**

Option	Type	Description
-12C	Connector 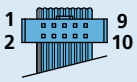	Material PVC, 10 conductors, AWG 28 with connector A05a - TCO, pitch 2 mm

Connection -12/-12C

No.	Function
1	Phase C
2	Phase B
3	Phase A
4	GND
5	U_{DD} (+5V)
6	Sin +
7	Sin -
8	Cos +
9	Cos -
10	N.C.

Standard cable

Material PVC, 10 conductors, AWG 28, grid 1mm, wires tinned.

Product combination

Drive Electronics

Cables / Accessories

To view our large range of accessory parts, please refer to the "Accessories" chapter.

© DR. FRITZ FAULHABER GMBH & CO. KG
Specifications subject to change without notice.

Linear DC-Servomotors 9,2 N

with Analog Hall Sensors

LM 2070 ... 11

Values at 22°C	LM 2070 ... 11		
Continuous force	$F_{e\ max.}$	9,2	N
Peak force	$F_{p\ max.}$	27,6	N
Continuous current	$I_{e\ max.}$	0,79	A
Peak current	$I_{p\ max.}$	2,4	A
Back-EMF constant	k_E	9,5	V/m/s
Force constant	k_F	11,64	N/A
Terminal resistance, phase-phase	R	10,83	Ω
Terminal inductance, phase-phase	L	1 125	µH
Thermal resistance	R_{th1} / R_{th2}	3,1 / 9,3	K/W
Thermal time constant	τ_{w1} / τ_{w2}	30 / 1 200	s
Operating temperature range		-20 … +125	°C
Magnetic pitch	τ_m	24	mm
Rod bearings		polymer sleeves	
Housing material		metal, non-magnetic	
Direction of movement		electronically reversible	

	LM 2070-	040-11	080-11	120-11	160-11	220-11	
Stroke length	$S_{max.}$	40	80	120	160	220	mm
Repeatability	σ_r	60	60	60	60	80	µm
Accuracy	σ_a	200	300	400	500	600	µm
Acceleration	$a_{e\ max.}$	83,7	61,3	51,1	43,8	35,4	m/s²
Speed	$v_{e\ max.}$	1,8	2,2	2,6	2,6	2,8	m/s
Rod length	$L1$	134	182	218	254	314	mm
Rod mass	m_m	110	150	180	210	260	g
Total mass	m_t	248	288	318	348	398	g

Note: These motors are for operation with DC-voltage < 75 V DC. The given values are for free standing motors.
Other rod lengths available on request.

Motor characteristic curves

Trapezoidal motion profile (t1 = t2 = t3)

Displacement distance:	40 mm
Friction coefficient:	0,2
Slope angle:	0°
Rest time:	0,1 s

Load:
The max. applicable load (incl. rod) at a given speed with an external force of 0 N

External force:
The max. permissible external force at a given speed with a load (incl. rod) of:

- 0,5 kg
- 1,0 kg
- 2,0 kg

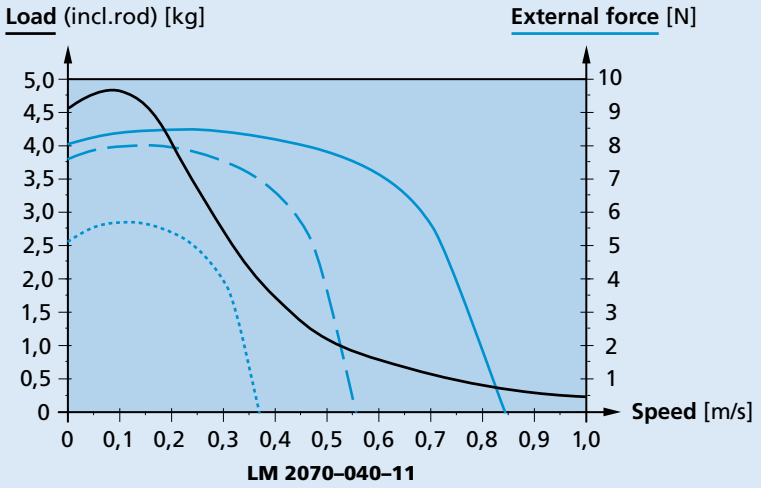

LM 2070–040–11

© DR. FRITZ FAULHABER GMBH & CO. KG
Specifications subject to change without notice.
www.faulhaber.com

Dimensional drawing

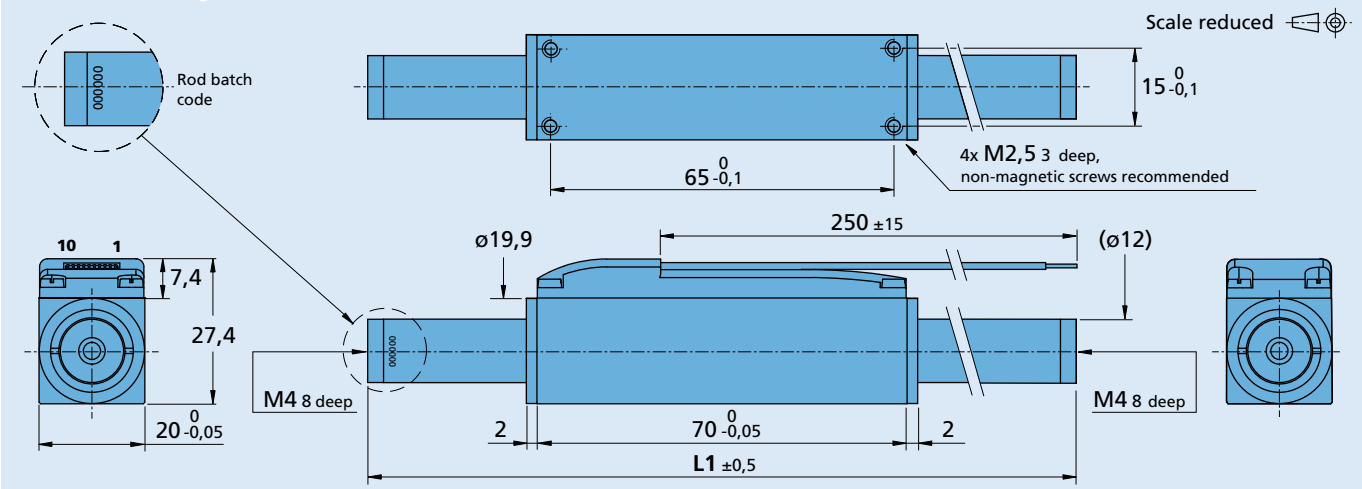

LM 2070 ... 11

Option, cable and connection information

Example product designation: **LM2070-040-11**

Option	Type	Description
-11C	Connector	Material PVC, 10 conductors, AWG 28 with connector A05a - TCO, pitch 2 mm

Connection -11/-11C

No.	Function
1	Phase C
2	Phase B
3	Phase A
4	GND
5	U_{DD} (+5V)
6	Hall sensor C
7	Hall sensor B
8	Hall sensor A
9	N.C.
10	N.C.

Standard cable

Material PVC,
10 conductors, AWG 28,
grid 1mm, wires tinned.

Product combination

Drive Electronics

MC 3001 B
MC 3001 P
MC 3603 S
MC 5004 P
MC 5005 S

Cables / Accessories

To view our large range of accessory parts, please refer to the "Accessories" chapter.

© DR. FRITZ FAULHABER GMBH & CO. KG
Specifications subject to change without notice.

Linear DC-Servomotors 9,2 N

for sin/cos control

LM 2070 ... 12

Values at 22°C	LM 2070 ... 12		
Continuous force	$F_{e\ max.}$	9,2	N
Peak force	$F_{p\ max.}$	27,6	N
Continuous current	$I_{e\ max.}$	0,79	A
Peak current	$I_{p\ max.}$	2,4	A
Back-EMF constant	k_E	9,5	V/m/s
Force constant	k_F	11,64	N/A
Terminal resistance, phase-phase	R	10,83	Ω
Terminal inductance, phase-phase	L	1 125	µH
Thermal resistance	R_{th1} / R_{th2}	3,1 / 9,3	K/W
Thermal time constant	τ_{w1} / τ_{w2}	30 / 1 200	s
Operating temperature range		-20 … +125	°C
Magnetic pitch	τ_m	24	mm
Rod bearings		polymer sleeves	
Housing material		metal, non-magnetic	
Direction of movement		electronically reversible	

	LM 2070-	040-12	080-12	120-12	160-12	220-12	
Stroke length	$S_{max.}$	40	80	120	160	220	mm
Repeatability	σ_r	100	100	100	100	120	µm
Accuracy	σ_a	500	600	700	800	900	µm
Acceleration	$a_{e\ max.}$	83,7	61,3	51,1	43,8	35,4	m/s²
Speed	$v_{e\ max.}$	1,8	2,2	2,5	2,6	2,8	m/s
Rod length	$L1$	134	182	218	254	314	mm
Rod mass	m_m	110	150	180	210	260	g
Total mass	m_t	248	288	318	348	398	g

Note: These motors are for operation with DC-voltage < 75 V DC. The given values are for free standing motors.
Other rod lengths available on request.

Motor characteristic curves

Trapezoidal motion profile (t1 = t2 = t3)

Displacement distance:	40 mm
Friction coefficient:	0,2
Slope angle:	0°
Rest time:	0,1 s

Load:
The max. applicable load (incl. rod) at a given speed with an external force of 0 N

External force:
The max. permissible external force at a given speed with a load (incl. rod) of:

- 0,5 kg
- 1,0 kg
- 2,0 kg

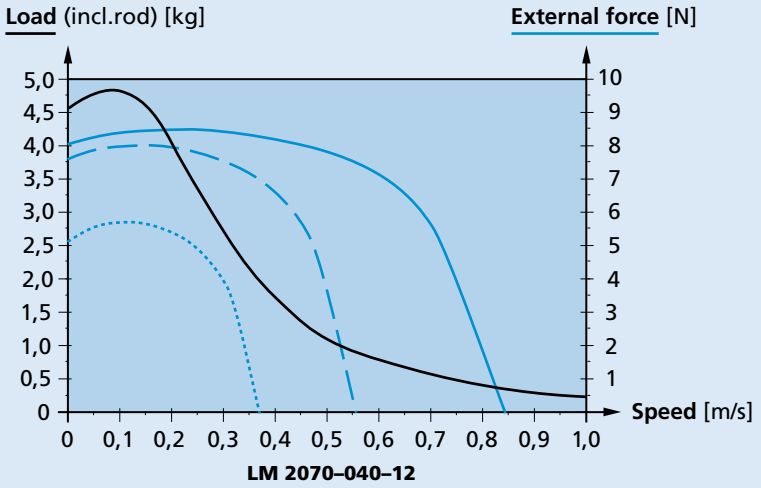

LM 2070–040–12

© DR. FRITZ FAULHABER GMBH & CO. KG
Specifications subject to change without notice.
www.faulhaber.com

Dimensional drawing

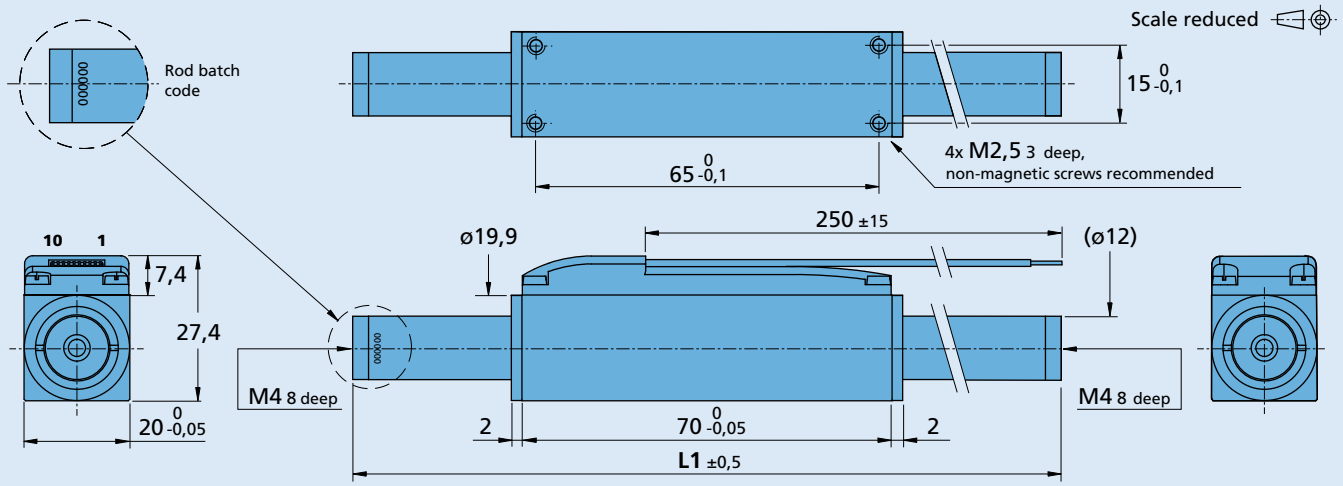

LM 2070 ... 12

Option, cable and connection information

Example product designation: **LM2070-040-12**

Option	Type	Description
-12C	Connector 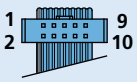	Material PVC, 10 conductors, AWG 28 with connector A05a - TCO, pitch 2 mm

Connection -12/-12C

No.	Function
1	Phase C
2	Phase B
3	Phase A
4	GND
5	U_{DD} (+5V)
6	Sin +
7	Sin -
8	Cos +
9	Cos -
10	N.C.

Standard cable

Material PVC,
10 conductors, AWG 28,
grid 1mm, wires tinned.

Product combination

Drive Electronics

Cables / Accessories

To view our large range of accessory parts, please refer to the "Accessories" chapter.

© DR. FRITZ FAULHABER GMBH & CO. KG
Specifications subject to change without notice.

Precision Gearheads

Precision Gearheads

03B	Planetary Gearheads	0.88	mNm
06A	Planetary Gearheads	25	mNm
06/1	Planetary Gearheads	25	mNm
08/1	Planetary Gearheads	60	mNm
08/2	Spur Gearheads	15	mNm
08/3	Spur Gearheads, zero backlash	15	mNm
10/1	Planetary Gearheads	0.1	Nm
12/3	Spur Gearheads	0.03	Nm
12/4	Planetary Gearheads	0.3	Nm
12/5	Spur Gearheads, zero backlash	0.03	Nm
13A	Planetary Gearheads	0.18	Nm
14/1	Planetary Gearheads	0.3	Nm
13A	Planetary Gearheads	0.18	Nm
14/1	Planetary Gearheads	0.3	Nm
15A	Planetary Gearheads	0.25	Nm
15/5	Spur Gearheads	0.1	Nm
15/5 S	Spur Gearheads	0.1	Nm
15/8	Spur Gearheads, zero backlash	0.1	Nm
15/10	Planetary Gearheads	0.35	Nm
16A	Spur Gearheads	0.03	Nm
16/5	Spur Gearheads	0.1	Nm

16/5 S	Spur Gearheads	0.1	Nm
16/7	Planetary Gearheads	0.3	Nm
16/8	Spur Gearheads, zero backlash	0.1	Nm
17/1	Planetary Gearheads	0.55	Nm
20/1R	Planetary Gearheads	0.8	Nm
22E	Planetary Gearheads	0.6	Nm
22EKV	Planetary Gearheads	1.2	Nm
22/2	Spur Gearheads	0.1	Nm
22/5	Spur Gearheads, zero backlash	0.1	Nm
22/7	Planetary Gearheads	0.7	Nm
23/1	Planetary Gearheads	0.7	Nm
26A	Planetary Gearheads	1	Nm
26/1R	Planetary Gearheads	3.5	Nm
30/1	Planetary Gearheads	4.5	Nm
30/1 S	Planetary Gearheads	4.5	Nm
32/3R	Planetary Gearheads	7	Nm
38/1	Planetary Gearheads	10	Nm
38/1 S	Planetary Gearheads	10	Nm
38/2	Planetary Gearheads	10	Nm
38/2 S	Planetary Gearheads	10	Nm
44/1	Planetary Gearheads	16	Nm

Backwards

NEW

Micro Planetary Gearheads

0,88 mNm

For combination with
Brushless DC-Motors

Series 03B

	03B
Housing material	plastic
Geartrain material	steel
Recommended max. input speed for:	
– continuous operation	15 000 min^{-1}
Backlash, at no-load	≤ 4 °
Bearings on output shaft	sleeve bearing
Shaft load, max.:	
– radial (2 mm from mounting face)	≤ 1 N
– axial	≤ 1 N
Shaft press fit force, max.	≤ 1 N
Shaft play:	
– radial (2 mm from mounting face)	≤ 0,07 mm
– axial	≤ 0,15 mm
Operating temperature range	- 20 ... + 60 °C

Technical data			
Number of gear stages		**2**	**3**
Continuous torque	mNm	0,28	0,88
Intermittent torque	mNm	0,42	1,32
Mass without motor, ca.	g	0,2	0,18
Efficiency, max.		-	-
Direction of rotation, drive to output		=	=
Reduction ratio (exact)		**25:1**	**125:1**
L2 [mm] = length without motor		6,0	6,0
L1 [mm] = length with motor 0308A...B		12,6	12,6

Note: These gearheads are available only with motors mounted.

Scale enlarged

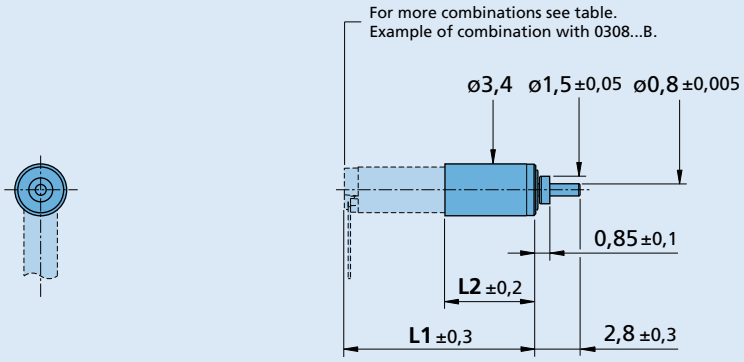

03B

For notes on technical data and lifetime performance refer to "Technical Information".

Edition 2023 May. 05

Backwards

© DR. FRITZ FAULHABER GMBH & CO. KG
Specifications subject to change without notice.

www.faulhaber.com

Micro Planetary Gearheads

25 mNm

For combination with
Brushless DC-Motors

Series 06A

	06A
Housing material	plastic
Geartrain material	bronze
Recommended max. input speed for:	
– continuous operation	15 000 min^{-1}
Backlash, at no-load	≤ 4 °
Bearings on output shaft	bronze
Shaft load, max.:	
– radial (3 mm from mounting face)	≤ 0,3 N
– axial	≤ 0,5 N
Shaft press fit force, max.	≤ 2 N
Shaft play:	
– radial (3 mm from mounting face)	≤ 0,05 mm
– axial	≤ 0,1 mm
Operating temperature range	- 20 ... + 60 °C

Technical data			
Number of gear stages		**2**	**3**
Continuous torque	mNm	1,2	6
Intermittent torque	mNm	1,8	9
Mass without motor, ca.	g	1,24	1,32
Efficiency, max.		-	-
Direction of rotation, drive to output		=	=
Reduction ratio (exact)		**25:1**	**125:1**
L2 [mm] = length without motor		11,0	11,0
L1 [mm] = length with motor 0515A...B		22,8	22,8

Note: These gearheads are available only with motors mounted.

Scale enlarged

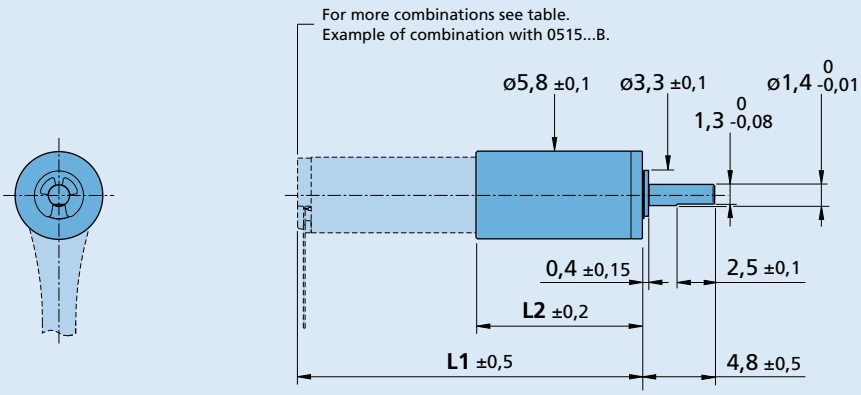

06A

For notes on technical data and lifetime performance refer to "Technical Information".

Edition 2022 Nov. 15

Backwards

© DR. FRITZ FAULHABER GMBH & CO. KG
Specifications subject to change without notice.

www.faulhaber.com

Planetary Gearheads

25 mNm

For combination with
DC-Micromotors
Brushless DC-Motors
Stepper Motors

Series 06/1

	06/1	06/1K
Housing material	steel	steel
Geartrain material	steel	steel
Recommended max. input speed for:		
– continuous operation	8 000 min^{-1}	8 000 min^{-1}
Backlash, at no-load	≤ 3 °	≤ 3 °
Bearings on output shaft	sintered bearings	ball bearings
Shaft load, max.:		
– radial (3,5 mm from mounting face)	≤ 0,5 N	≤ 5 N
– axial	≤ 0,5 N	≤ 3 N
Shaft press fit force, max.	≤ 3,5 N	≤ 5 N
Shaft play		
– radial (3,5 mm from mounting face)	≤ 0,06 mm	≤ 0,06 mm
– axial	≤ 0,1 mm	≤ 0,05 mm
Operating temperature range	- 30 ... + 100 °C	- 30 ... + 100 °C

Technical data							
Number of gear stages		**1**	**2**	**3**	**4**	**5**	**6**
Continuous torque	mNm	25	25	25	25	25	25
Intermittent torque	mNm	35	35	35	35	35	35
Mass without motor, ca.	g	2	2,8	3,4	4	4,4	5
Efficiency, max.	%	90	80	70	60	55	48
Direction of rotation, drive to output		=	=	=	=	=	=
Reduction ratio (exact)		**4:1**	**16:1**	**64:1**	**256:1**	**1 024:1**	**4 096:1**
L2 [mm] = length without motor		9,2	11,9	14,6	17,3	20,0	22,7
L1 [mm] = length with motor	0615C...S	24,2	26,9	29,6	32,3	35,0	37,7
	0515C...B	23,8	26,5	29,2	31,9	34,6	37,3
	0620C...B	29,2	31,9	34,6	37,3	40,0	42,7
	DM0620...35	18,7	21,4	24,1	26,8	29,5	32,2

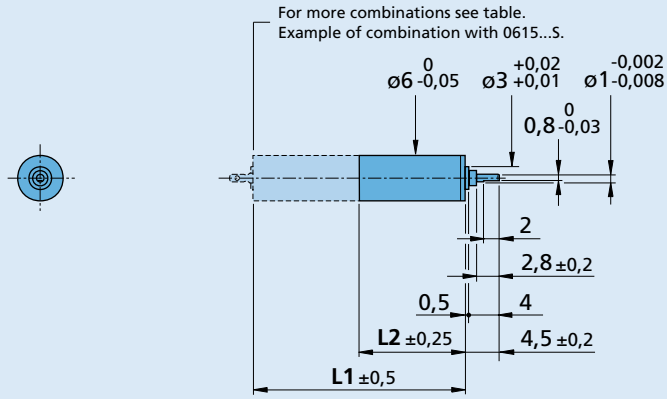

06/1

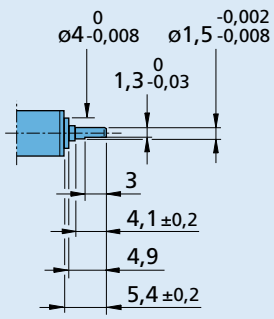

06/1 K (L1, L2 = +1)

For notes on technical data and lifetime performance refer to "Technical Information".

Edition 2020 Feb. 18

Backwards

© DR. FRITZ FAULHABER GMBH & CO. KG
Specifications subject to change without notice.

www.faulhaber.com

Planetary Gearheads

60 mNm

For combination with
DC-Micromotors
Brushless DC-Motors
Stepper Motors

Series 08/1

	08/1	08/1K
Housing material	metal	metal
Geartrain material	steel	steel
Recommended max. input speed for:		
– continuous operation	8 000 min^{-1}	8 000 min^{-1}
Backlash, at no-load	≤ 3 °	≤ 3 °
Bearings on output shaft	sintered bearings	ball bearings
Shaft load, max.:		
– radial (4,5 mm from mounting face)	≤ 0,8 N	≤ 5 N
– axial	≤ 1 N	≤ 3 N
Shaft press fit force, max.	≤ 5 N	≤ 5 N
Shaft play		
– radial (4,5 mm from mounting face)	≤ 0,06 mm	≤ 0,06 mm
– axial	≤ 0,1 mm	≤ 0,05 mm
Operating temperature range	- 30 ... + 100 °C	- 30 ... + 100 °C

Technical data							
Number of gear stages		**1**	**2**	**3**	**4**	**5**	**6**
Continuous torque	mNm	60	60	60	60	60	60
Intermittent torque	mNm	120	120	120	120	120	120
Mass without motor, ca.	g	2,9	3,8	4,6	5,4	6,3	7,1
Efficiency, max.	%	90	80	70	60	55	48
Direction of rotation, drive to output		=	=	=	=	=	=
Reduction ratio (exact)		**4:1**	**16:1**	**64:1**	**256:1**	**1 024:1**	**4 096:1**
L2 [mm] = length without motor		9,6	12,3	15,0	17,7	20,4	23,1
L1 [mm] = length with motor	0816P...SR	25,5	28,2	30,9	33,6	36,3	39,0
	0824P...B	33,7	36,4	39,1	41,8	44,5	47,2
	AM0820...08	23,4	26,1	28,8	31,5	34,2	36,9

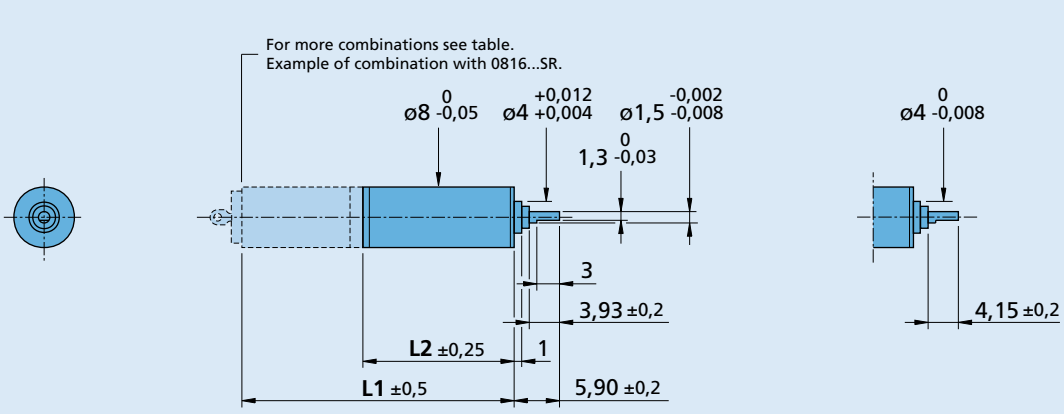

08/1 **08/1 K**

For notes on technical data and lifetime performance refer to "Technical Information".

Edition 2020 Feb. 18

Backwards

© DR. FRITZ FAULHABER GMBH & CO. KG
Specifications subject to change without notice.

www.faulhaber.com

Spur Gearheads

15 mNm

For combination with
DC-Micromotors
Brushless DC-Motors
Stepper Motors

Series 08/2

	08/2	08/2K
Housing material	metal	metal
Geartrain material	metal	metal
Recommended max. input speed for:		
– continuous operation	8 000 min^{-1}	8 000 min^{-1}
Backlash, at no-load	≤ 5 °	≤ 5 °
Bearings on output shaft	sintered bearings	ball bearings
Shaft load, max.:		
– radial (4,5 mm from mounting face)	≤ 0,8 N	≤ 5 N
– axial	≤ 1 N	≤ 3 N
Shaft press fit force, max.	≤ 5 N	≤ 5 N
Shaft play		
– radial (4,5 mm from mounting face)	≤ 0,06 mm	≤ 0,06 mm
– axial	≤ 0,1 mm	≤ 0,05 mm
Operating temperature range	- 30 ... + 100 °C	- 30 ... + 100 °C

Technical data

Number of gear stages		**2**	**3**	**4**	**5**	**6**	**7**	**8**	**9**
Continuous torque	mNm	15	15	15	15	15	15	15	15
Intermittent torque	mNm	25	25	25	25	25	25	25	25
Mass without motor, ca.	g	3,2	3,4	3,6	3,8	4	4,2	4,4	4,6
Efficiency, max.	%	94	90	86	81	77	74	70	66
Direction of rotation, drive to output		=	≠	=	≠	=	≠	=	≠
Reduction ratio [1] (rounded)		**4:1**	**9,4:1**	**21,9:1**	**51,2:1**	**120:1**	**279:1**	**650:1**	**1 518:1**
L2 [mm] = length without motor		12,0	13,4	15,2	17,0	18,8	20,6	22,4	24,2
L1 [mm] = length with motor	0816D...SR	27,9	29,3	31,1	32,9	34,7	36,5	38,3	40,1
	0824D...B	36,1	37,5	39,3	41,1	42,9	44,7	46,5	48,3
	AM0820...12	25,8	27,2	29,0	30,8	32,6	34,4	36,2	38,0

[1] The reduction ratios are rounded, the exact values are available on request or at www.faulhaber.com.

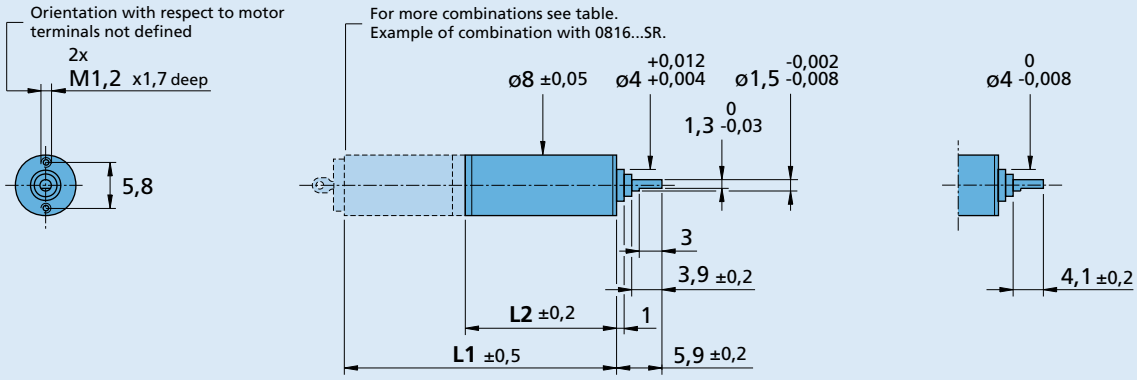

08/2 **08/2 K**

For notes on technical data and lifetime performance refer to "Technical Information".

Edition 2020 Feb. 18

Backwards

© DR. FRITZ FAULHABER GMBH & CO. KG
Specifications subject to change without notice.

www.faulhaber.com

Spur Gearheads

15 mNm

Zero Backlash

For combination with
DC-Micromotors
Brushless DC-Motors
Stepper Motors

Series 08/3

	08/3
Housing material	metal
Geartrain material	metal
Recommended max. input speed for:	
– continuous operation	8 000 min^{-1}
Backlash, at no-load	0 °
Bearings on output shaft	ball bearings
Shaft load, max.:	
– radial (4,5 mm from mounting face)	≤ 5 N
– axial	≤ 3 N
Shaft press fit force, max.	≤ 5 N
Shaft play	
– radial (4,5 mm from mounting face)	≤ 0,06 mm
– axial	≤ 0,05 mm
Operating temperature range	- 30 ... + 100 °C

Technical data

Number of gear stages		**6**	**7**	**8**	**9**
Continuous torque	mNm	15	15	15	15
Intermittent torque	mNm	25	25	25	25
Mass without motor, ca.	g	4,5	4,9	5,3	5,7
Efficiency, max.		-	-	-	-
Direction of rotation, drive to output		=	≠	=	≠
Reduction ratio [1] (rounded)		**120:1**	**279:1**	**650:1**	**1 518:1**
L2 [mm] = length without motor		18,8	20,6	22,4	24,2
L1 [mm] = length with motor	0816D...SR	34,7	36,5	38,3	40,1
	0824D...B	42,9	44,7	46,5	48,3
	AM0820...12	32,6	34,4	36,2	38,0

[1] The reduction ratios are rounded, the exact values are available on request or at www.faulhaber.com.

Note: These gearheads are available only with motors mounted.

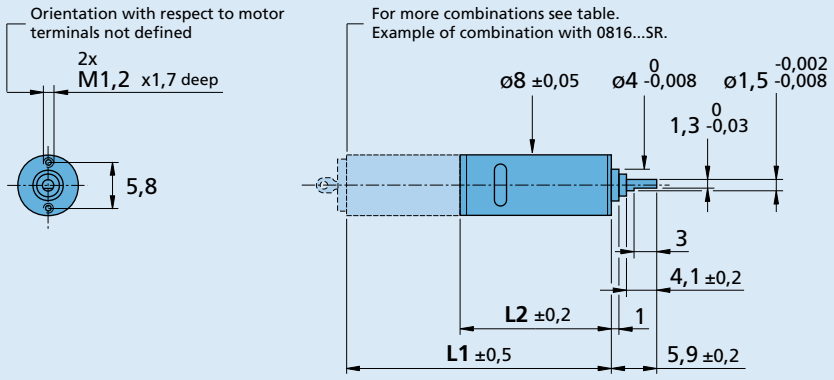

08/3

© DR. FRITZ FAULHABER GMBH & CO. KG
Specifications subject to change without notice.

Planetary Gearheads

0,1 Nm

For combination with
DC-Micromotors
Brushless DC-Motors
Stepper Motors

Series 10/1

	10/1	10/1K
Housing material	metal	metal
Geartrain material	steel	steel
Recommended max. input speed for:		
– continuous operation	5 000 min^{-1}	5 000 min^{-1}
Backlash, at no-load	≤ 3 °	≤ 3 °
Bearings on output shaft	sintered bearings	ball bearings, preloaded
Shaft load, max.:		
– radial (5 mm from mounting face)	≤ 1 N	≤ 7 N
– axial	≤ 2 N	≤ 5 N
Shaft press fit force, max.	≤ 10 N	≤ 5 N
Shaft play		
– radial (5 mm from mounting face)	≤ 0,06 mm	≤ 0,04 mm
– axial	≤ 0,1 mm	= 0 mm
Operating temperature range	- 30 ... + 100 °C	- 30 ... + 100 °C

Technical data							
Number of gear stages		**1**	**2**	**3**	**4**	**5**	**6**
Continuous torque	mNm	5	15	54	100	100	100
Intermittent torque	mNm	200	200	200	200	200	200
Mass without motor, ca.	g	6	7	8	10	11	13
Efficiency, max.	%	90	80	70	60	55	48
Direction of rotation, drive to output		=	=	=	=	=	=
Reduction ratio (exact)		**4:1**	**16:1**	**64:1**	**256:1**	**1 024:1**	**4 096:1**
L2 [mm] = length without motor		9,7	12,8	15,9	19,0	22,1	25,2
L1 [mm] = length with motor	0816M...SR	25,6	28,7	31,8	34,9	38,0	41,1
	1016M...SR	25,6	28,7	31,8	34,9	38,0	41,1
	1024M...SR	33,6	36,7	39,8	42,9	46,0	49,1
	1219M...G	28,4	31,5	34,6	37,7	40,8	43,9
	1224M...SR	33,9	37,0	40,1	43,2	46,3	49,4
	0824M...B	33,8	36,9	40,0	43,1	46,2	49,3
	1028M...B	37,8	40,9	44,0	47,1	50,2	53,3
	1218M...B	27,7	30,8	33,9	37,0	40,1	43,2
	1226M...B	35,7	38,8	41,9	45,0	48,1	51,2
	AM0820...10	23,5	26,6	29,7	32,8	35,9	39,0
	AM1020...08	25,6	28,7	31,8	34,9	38,0	41,1
	DM1220...55	27,1	30,2	33,3	36,4	39,5	42,6

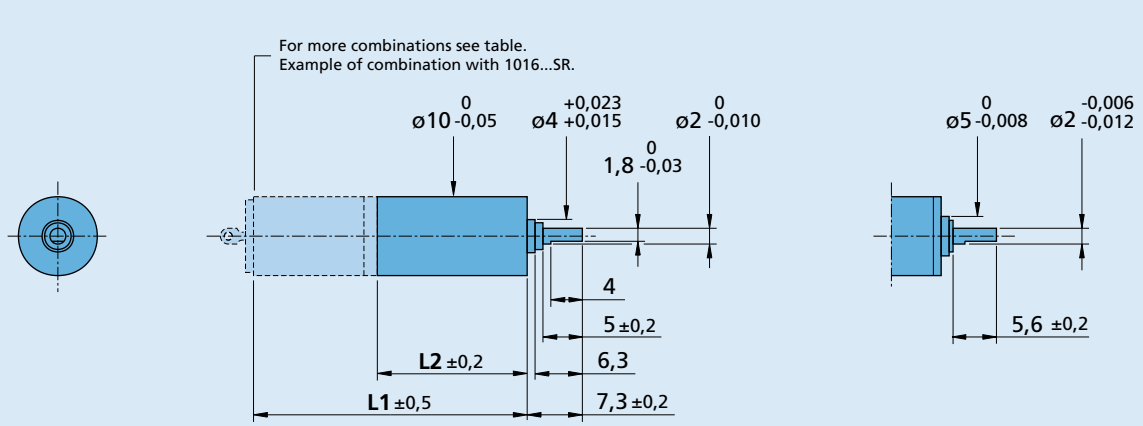

10/1

10/1 K (L1, L2 = +1)

For notes on technical data and lifetime performance refer to "Technical Information".

Edition 2020 Feb. 18

Backwards

© DR. FRITZ FAULHABER GMBH & CO. KG
Specifications subject to change without notice.

www.faulhaber.com

Spur Gearheads

0,03 Nm

For combination with
DC-Micromotors
Brushless DC-Motors
Stepper Motors

Series 12/3

	12/3	12/3K
Housing material	metal	metal
Geartrain material	metal	metal
Recommended max. input speed for:		
– continuous operation	5 000 min^{-1}	5 000 min^{-1}
Backlash, at no-load	≤ 3 °	≤ 3 °
Bearings on output shaft	sintered bearings	ball bearings
Shaft load, max.:		
– radial (4,5 mm from mounting face)	≤ 3 N	≤ 5 N
– axial	≤ 2 N	≤ 10 N
Shaft press fit force, max.	≤ 10 N	≤ 10 N
Shaft play		
– radial (4,5 mm from mounting face)	≤ 0,06 mm	≤ 0,08 mm
– axial	≤ 0,1 mm	≤ 0,05 mm
Operating temperature range	- 30 ... + 100 °C	- 30 ... + 100 °C

Technical data

Number of gear stages		**3**	**4**	**5**	**6**	**7**	**8**	**9**	**10**	**11**
Continuous torque	mNm	6	8	10	20	30	30	30	30	30
Intermittent torque	mNm	100	100	100	100	100	100	100	100	100
Mass without motor, ca.	g	9	10	11	12	13	14	15	16	17
Efficiency, max.	%	90	86	81	77	74	70	66	63	60
Direction of rotation, drive to output		≠	=	≠	=	≠	=	≠	=	≠
Reduction ratio [1] (rounded)		**9,17:1**	**20,6:1**	**46,4:1**	**104,4:1**	**235:1**	**529:1**	**1 190:1**	**2 677:1**	**6 023:1**
L2 [mm] = length without motor		15,4	17,5	19,6	21,7	23,8	25,9	28,0	30,1	32,2
L1 [mm] = length with motor	1016E...SR	31,3	33,4	35,5	37,6	39,7	41,8	43,9	46,0	48,1
	1024E...SR	39,3	41,4	43,5	45,6	47,7	49,8	51,9	54,0	56,1
	1219E...G	34,1	36,2	38,3	40,4	42,5	44,6	46,7	48,8	50,9
	1224E...SR	39,6	41,7	43,8	45,9	48,0	50,1	52,2	54,3	56,4
	1028E...B	43,5	45,6	47,7	49,8	51,9	54,0	56,1	58,2	60,3
	1218E...B	33,4	35,5	37,6	39,7	41,8	43,9	46,0	48,1	50,2
	1226E...B	41,4	43,5	45,6	47,7	49,8	51,9	54,0	56,1	58,2
	AM1020...10	31,3	33,4	35,5	37,6	39,7	41,8	43,9	46,0	48,1
	DM1220...57	32,8	34,9	37,0	39,1	41,2	43,3	45,4	47,5	49,6

[1] The reduction ratios are rounded, the exact values are available on request or at www.faulhaber.com.

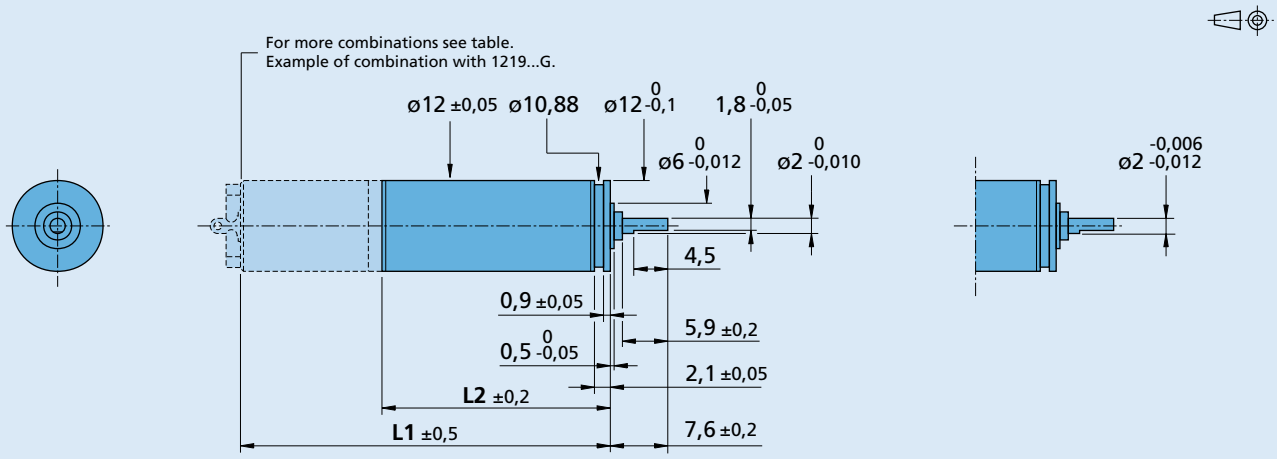

12/3 **12/3 K** (L1, L2 = +1)

For notes on technical data and lifetime performance refer to "Technical Information".

Edition 2020 Feb. 18

Backwards

© DR. FRITZ FAULHABER GMBH & CO. KG
Specifications subject to change without notice.

www.faulhaber.com

Spur Gearheads

0,03 Nm

For combination with
DC-Micromotors
Brushless DC-Motors
Stepper Motors

Series 12/3

	12/3	12/3K
Housing material	metal	metal
Geartrain material	metal	metal
Recommended max. input speed for:		
– continuous operation	5 000 min^{-1}	5 000 min^{-1}
Backlash, at no-load	≤ 3 °	≤ 3 °
Bearings on output shaft	sintered bearings	ball bearings
Shaft load, max.:		
– radial (4,5 mm from mounting face)	≤ 3 N	≤ 5 N
– axial	≤ 2 N	≤ 10 N
Shaft press fit force, max.	≤ 10 N	≤ 10 N
Shaft play		
– radial (4,5 mm from mounting face)	≤ 0,06 mm	≤ 0,08 mm
– axial	≤ 0,1 mm	≤ 0,05 mm
Operating temperature range	- 30 ... + 100 °C	- 30 ... + 100 °C

Technical data					
Number of gear stages		**12**	**13**	**14**	**15**
Continuous torque	mNm	30	30	30	30
Intermittent torque	mNm	100	100	100	100
Mass without motor, ca.	g	18	19	20	22
Efficiency, max.	%	57	54	51	49
Direction of rotation, drive to output		=	≠	=	≠
Reduction ratio [1] (rounded)		**13 552:1**	**30 492:1**	**68 608:1**	**154 368:1**
L2 [mm] = length without motor		34,3	36,4	38,5	40,6
L1 [mm] = length with motor	1016E...SR	50,2	52,3	54,4	56,5
	1024E...SR	58,2	60,3	62,4	64,5
	1219E...G	53,0	55,1	57,2	59,3
	1224E...SR	58,5	60,6	62,7	64,8
	1028E...B	62,4	64,5	66,6	68,7
	1218E...B	52,3	54,4	56,5	58,6
	1226E...B	60,3	62,4	64,5	66,6
	AM1020...10	50,2	52,3	54,4	56,5
	DM1220...57	51,7	53,8	55,9	58,0

[1] The reduction ratios are rounded, the exact values are available on request or at www.faulhaber.com.

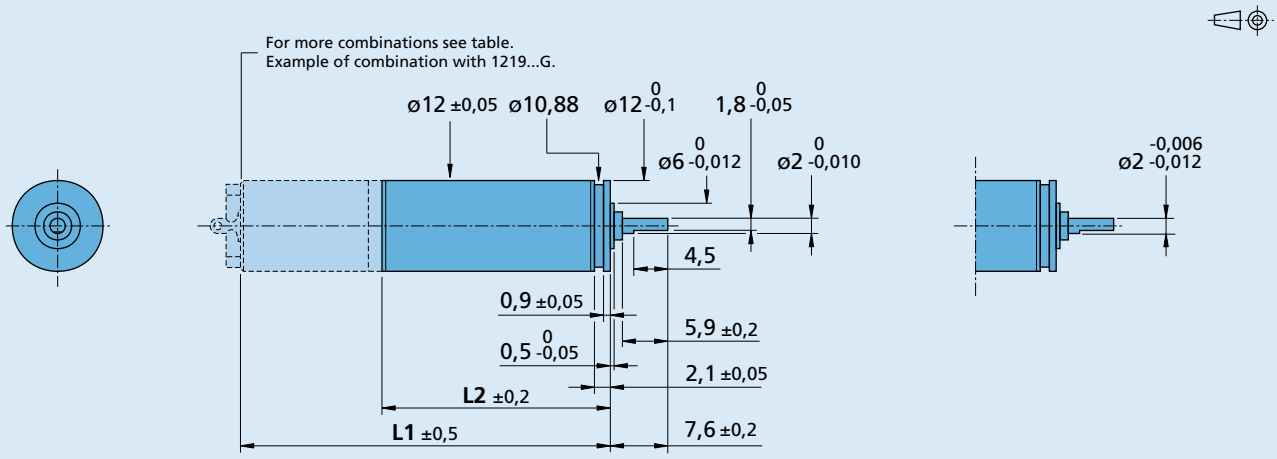

12/3 **12/3 K** (L1, L2 = +1)

For notes on technical data and lifetime performance refer to "Technical Information".

Edition 2020 Feb. 18

Backwards

© DR. FRITZ FAULHABER GMBH & CO. KG
Specifications subject to change without notice.

www.faulhaber.com

Planetary Gearheads

0,3 Nm

For combination with
DC-Micromotors
Brushless DC-Motors
Stepper Motors

Series 12/4

	12/4	12/4K
Housing material	metal	metal
Geartrain material	metal	metal
Recommended max. input speed for:		
– continuous operation	5 000 min^{-1}	5 000 min^{-1}
Backlash, at no-load	≤ 3 °	≤ 3 °
Bearings on output shaft	sintered bearings	ball bearings, preloaded
Shaft load, max.:		
– radial (6 mm from mounting face)	≤ 4 N	≤ 20 N
– axial	≤ 3 N	≤ 5 N
Shaft press fit force, max.	≤ 15 N	≤ 5 N
Shaft play		
– radial (6 mm from mounting face)	≤ 0,05 mm	≤ 0,04 mm
– axial	≤ 0,1 mm	= 0 mm
Operating temperature range	- 30 ... + 100 °C	- 30 ... + 100 °C

Technical data						
Number of gear stages		**1**	**2**	**3**	**4**	**5**
Continuous torque	mNm	300	300	300	300	300
Intermittent torque	mNm	450	450	450	450	450
Mass without motor, ca.	g	12	15	18	21	24
Efficiency, max.	%	90	80	70	60	55
Direction of rotation, drive to output		=	=	=	=	=
Reduction ratio (exact)		**4:1**	**16:1**	**64:1**	**256:1**	**1 024:1**
L2 [mm] = length without motor		15,1	19,7	24,3	28,9	33,5
L1 [mm] = length with motor	1016A...SR	31,0	35,6	40,2	44,8	49,4
	1024A...SR	39,0	43,6	48,2	52,8	57,4
	1224A...SR	39,3	43,9	48,5	53,1	57,7
	1028A...B	43,2	47,8	52,4	57,0	61,6
	1218A...B	33,1	37,7	42,3	46,9	51,5
	1226A...B	41,1	45,7	50,3	54,9	59,5
	AM1020...31	31,0	35,6	40,2	44,8	49,4
	DM1220...59	32,5	37,1	41,7	46,3	50,9

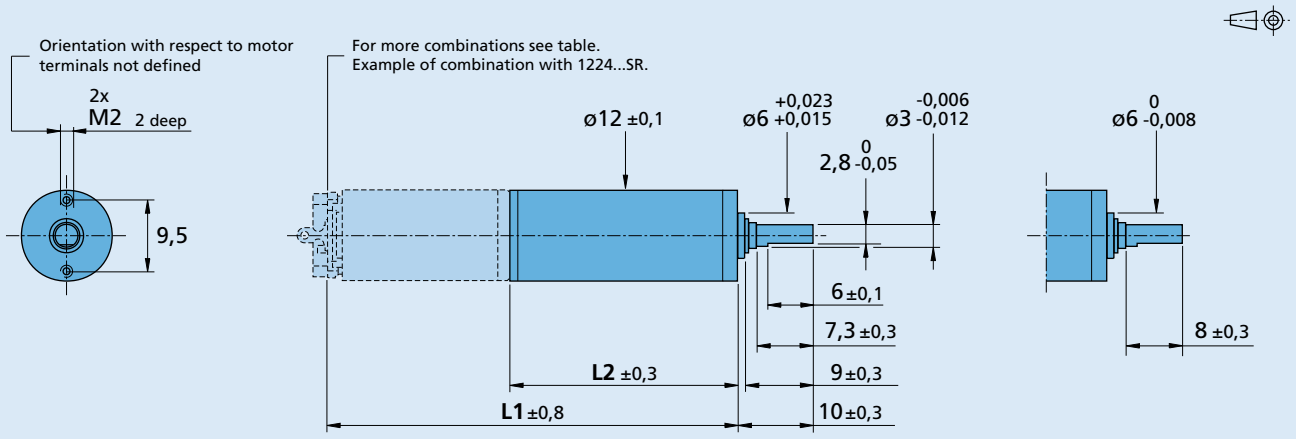

For notes on technical data and lifetime performance refer to "Technical Information".

Edition 2020 Feb. 18

Backwards

© DR. FRITZ FAULHABER GMBH & CO. KG
Specifications subject to change without notice.

www.faulhaber.com

Spur Gearheads

Zero Backlash

0,03 Nm

For combination with
DC-Micromotors
Brushless DC-Motors
Stepper Motors

Series 12/5

	12/5
Housing material	metal
Geartrain material	metal
Recommended max. input speed for:	
– continuous operation	5 000 min^{-1}
Backlash, at no-load	0 °
Bearings on output shaft	ball bearings, preloaded
Shaft load, max.:	
– radial (4,5 mm from mounting face)	≤ 5 N
– axial	≤ 5 N
Shaft press fit force, max.	≤ 10 N
Shaft play	
– radial (4,5 mm from mounting face)	≤ 0,04 mm
– axial	= 0 mm
Operating temperature range	- 30 ... + 100 °C

Technical data						
Number of gear stages		**5**	**6**	**7**	**8**	**9**
Continuous torque	mNm	30	30	30	30	30
Intermittent torque	mNm	100	100	100	100	100
Mass without motor, ca.	g	11	12	13	14	15
Efficiency, max.		-	-	-	-	-
Direction of rotation, drive to output		≠	=	≠	=	≠
Reduction ratio [1] (rounded)		**69,2:1**	**161:1**	**377:1**	**879:1**	**2 050:1**
L2 [mm] = length without motor		18,7	20,8	22,9	25,0	27,1
L1 [mm] = length with motor	1016E...SR	34,6	36,7	38,8	40,9	43,0
	1024E...SR	42,6	44,7	46,8	48,9	51,0
	1224E...SR	42,9	45,0	47,1	49,2	51,3
	1028E...B	46,8	48,9	51,0	53,1	55,2
	1218E...B	36,7	38,8	40,9	43,0	45,1
	1226E...B	44,7	46,8	48,9	51,0	53,1
	AM1020...10	34,6	36,7	38,8	40,9	43,0
	DM1220...57	36,1	38,2	40,3	42,4	44,5

[1] The reduction ratios are rounded, the exact values are available on request or at www.faulhaber.com.

Note: These gearheads are available only with motors mounted.

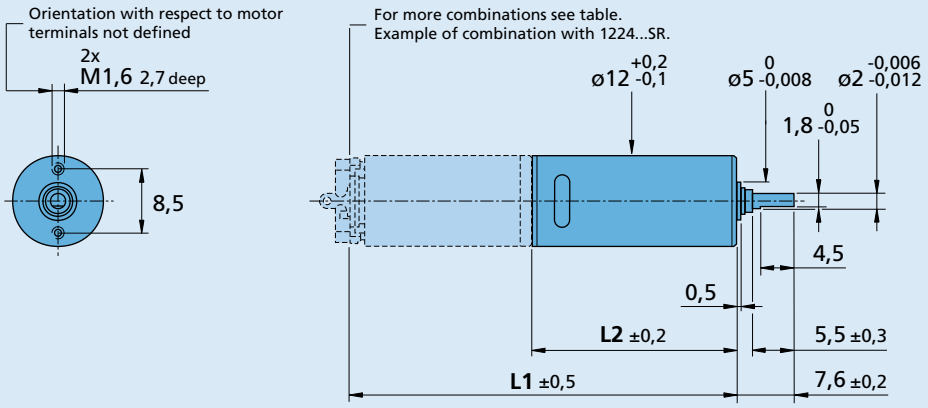

12/5

© DR. FRITZ FAULHABER GMBH & CO. KG
Specifications subject to change without notice.

Planetary Gearheads

0,18 Nm

For combination with
DC-Micromotors

Series 13A

	13A	13AC	13AK
Housing material	plastic/aluminium	plastic/aluminium	plastic/aluminium
Geartrain material	plastic	plastic	plastic
Recommended max. input speed for:			
– continuous operation	5 000 min^{-1}	5 000 min^{-1}	5 000 min^{-1}
Backlash, at no-load	≤ 4 °	≤ 4 °	≤ 4 °
Bearings on output shaft	sintered bearings	ceramic bearings	ball bearings
Shaft load, max.:			
– radial (5 mm from mounting face)	≤ 3 N	≤ 10 N	≤ 15 N
– axial	≤ 1 N	≤ 2 N	≤ 5 N
Shaft press fit force, max.	≤ 10 N	≤ 10 N	≤ 10 N
Shaft play			
– radial (5 mm from mounting face)	≤ 0,06 mm	≤ 0,08 mm	≤ 0,09 mm
– axial	≤ 0,25 mm	≤ 0,25 mm	≤ 0,25 mm
Operating temperature range	- 30 ... + 65 °C	- 20 ... + 85 °C	- 30 ... + 85 °C

Technical data					
Number of gear stages		**2**	**3**	**4**	**5**
Continuous torque	mNm	100	100	150	180
Intermittent torque	mNm	150	150	180	220
Mass without motor, ca.	g	5	5	5	6
Efficiency, max.	%	80	72	64	55
Direction of rotation, drive to output		=	=	=	=
Reduction ratio [1] (rounded)		**16:1**	**50:1** **64:1**	**158:1** **201:1** **256:1**	**497:1** **632:1** **805:1** **1 024:1**
L2 [mm] = length without motor		18,8	22,0	25,2	28,4
L1 [mm] = length with motor	1319C...SR	38,0	41,2	44,4	47,6
	1331C...SR	50,0	53,2	56,4	59,6

[1] The reduction ratios are rounded, the exact values are available on request or at www.faulhaber.com.

Note: These gearheads are available only with motors mounted.
Vibrational load of up to 5 g at frequencies up to 500 Hz will not limit the function of the motor-gearhead combinations.

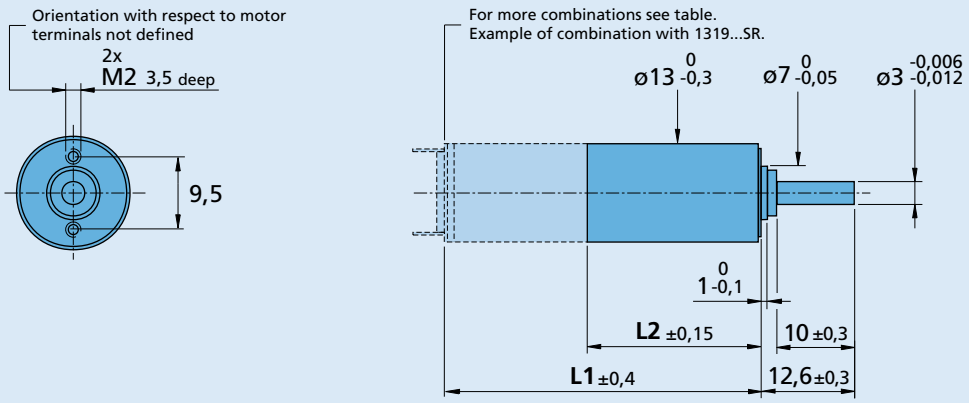

13A, 13AC, 13AK

© DR. FRITZ FAULHABER GMBH & CO. KG
Specifications subject to change without notice.

Planetary Gearheads

0,3 Nm

For combination with
DC-Micromotors

Series 14/1

	14/1
Housing material	metal
Geartrain material	steel
Recommended max. input speed for:	
– continuous operation	5 000 min^{-1}
Backlash, at no-load	≤ 1 °
Bearings on output shaft	ball bearings, preloaded
Shaft load, max.:	
– radial (6,5 mm from mounting face)	≤ 20 N
– axial	≤ 5 N
Shaft press fit force, max.	≤ 15 N
Shaft play	
– radial (6,5 mm from mounting face)	≤ 0,04 mm
– axial	= 0 mm
Operating temperature range	- 30 ... + 100 °C

Technical data							
Number of gear stages		**1**	**2**	**3**	**4**	**5**	**6**
Continuous torque	mNm	200	300	300	300	300	300
Intermittent torque	mNm	300	450	450	450	450	450
Mass without motor, ca.	g	17	20	24	27	30	34
Efficiency, max.	%	90	80	70	60	55	50
Direction of rotation, drive to output		=	=	=	=	=	=
Reduction ratio [1] (rounded)		**3,71:1**	**9,7:1** **14:1**	**43:1** **66:1**	**94:1** **112:1** **134:1** **159:1** **190:1** **246:1**	**415:1** **592:1** **989:1** **1 526:1**	**2 608:1** **4 365:1** **5 647:1**
L2 [mm] = length without motor		20,9	25,0	29,2	33,3	37,4	41,5
L1 [mm] = length with motor	1319T...SR	34,1	38,2	42,4	46,5	50,6	54,7
	1331T...SR	46,1	50,2	54,4	58,5	62,6	66,7
	1336U...CXR	50,9	55,0	59,2	63,3	67,4	71,5

[1] The reduction ratios are rounded, the exact values are available on request or at www.faulhaber.com.

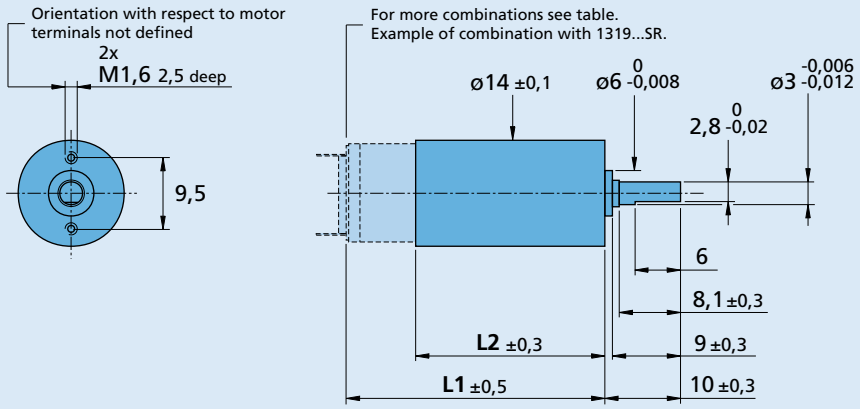

14/1

© DR. FRITZ FAULHABER GMBH & CO. KG
Specifications subject to change without notice.

Planetary Gearheads

0,25 Nm

For combination with
DC-Micromotors
Stepper Motors

Series 15A

	15A	15AC	15AK
Housing material	plastic	plastic	plastic
Geartrain material	plastic	plastic	plastic
Recommended max. input speed for:			
– continuous operation	5 000 min^{-1}	5 000 min^{-1}	5 000 min^{-1}
Backlash, at no-load	≤ 4 °	≤ 4 °	≤ 4 °
Bearings on output shaft	sintered bearings	ceramic bearings	ball bearings
Shaft load, max.:			
– radial (5 mm from mounting face)	≤ 3 N	≤ 10 N	≤ 15 N
– axial	≤ 1 N	≤ 2 N	≤ 5 N
Shaft press fit force, max.	≤ 10 N	≤ 10 N	≤ 10 N
Shaft play			
– radial (5 mm from mounting face)	≤ 0,06 mm	≤ 0,08 mm	≤ 0,09 mm
– axial	≤ 0,25 mm	≤ 0,25 mm	≤ 0,25 mm
Operating temperature range	- 30 ... + 65 °C	- 20 ... + 85 °C	- 30 ... + 85 °C

Technical data									
Number of gear stages		**1**	**2**	**3**	**3**	**4**	**5**	**5**	**6**
Continuous torque	mNm	50	100	100	150	200	200	250	250
Intermittent torque	mNm	100	200	200	300	400	400	400	400
Mass without motor, ca.	g	4	5	5	5	6	6	6	7
Efficiency, max.	%	87	78	68	67	62	55	52	49
Direction of rotation, drive to output		=	=	=	=	=	=	=	=
Reduction ratio [1] (rounded)	Code B [2]		**14:1** **19:1**	**52:1** **69:1**		**249:1**	**896:1**		**3 225:1**
	Code A [2]	**5,33:1**	**28:1**	**102:1**	**152:1**	**369:1** **546:1** **809:1**	**1 327:1** **1 966:1**	**2 913:1** **4 315:1**	**4 778:1** **7 078:1** **10 486:1** **15 534:1** **23 014:1**
L2 [mm] = length without motor [3]		14,1	17,7	21,3	21,3	24,9	28,5	28,5	32,1
L1 [mm] = length with motor	1516A/B...SR	29,9	33,5	37,1	37,1	40,7	44,3	44,3	47,9
	1524A/B...SR	37,9	41,5	45,1	45,1	48,7	52,3	52,3	55,9
	1624A/B...S	37,9	41,5	45,1	45,1	48,7	52,3	52,3	55,9
	1717A/B...SR	31,1	34,7	38,3	38,3	41,9	45,5	45,5	49,1
	1724A/B...SR	38,1	41,7	45,3	45,3	48,9	52,5	52,5	56,1
	AM1524...70	30,5	34,1	37,7	37,7	41,3	44,9	44,9	48,5

[1] The reduction ratios are rounded, the exact values are available on request or at www.faulhaber.com.
[2] Example of ordering information: 1516 **B** 012 SR + 15A 19:1, not for AM1524.
[3] L2 + 0,7 mm, in combination with 1516A/B...SR and 1524A/B...SR.

Note: These gearheads are available only with motors mounted.

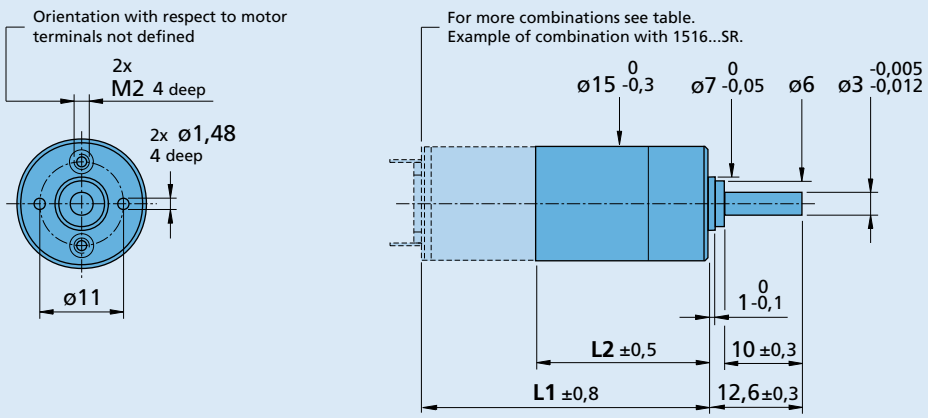

15A, 15AC, 15AK

© DR. FRITZ FAULHABER GMBH & CO. KG
Specifications subject to change without notice.

Spur Gearheads

0,1 Nm

For combination with
DC-Micromotors
Stepper Motors

Series 15/5

	15/5
Housing material	metal
Geartrain material [1]	plastic/steel
Recommended max. input speed for:	
– continuous operation	5 000 min^{-1}
Backlash, at no-load	≤ 3 °
Bearings on output shaft	ball bearings, preloaded
Shaft load, max.:	
– radial (6,5 mm from mounting face)	≤ 25 N
– axial	≤ 5 N
Shaft press fit force, max.	≤ 5 N
Shaft play	
– radial (6,5 mm from mounting face)	≤ 0,03 mm
– axial	= 0 mm
Operating temperature range	- 30 ... + 100 °C

Technical data

Number of gear stages		**2**	**3**	**4**	**4**	**5**	**5**	**6**	**6**	**7**
Continuous torque	mNm	60	60	100	100	100	100	100	100	100
Intermittent torque	mNm	150	150	300	150	300	150	300	150	300
Mass without motor, ca.	g	17	19	21	21	22	22	24	24	25
Efficiency, max.	%	81	73	66	66	59	59	53	53	48
Direction of rotation, drive to output		=	≠	=	=	≠	≠	=	=	≠
Reduction ratio [2] (rounded)		**6,3:1** **11,8:1**	**22:1** **41:1**	**76:1**	**141:1**	**262:1**	**485:1**	**900:1**	**1 670:1**	**3 101:1**
L2 [mm] = length without motor		26,2	29,9	32,0	32,0	34,1	34,1	36,2	36,2	38,3
L1 [mm] = length with motor	1319E...SR	32,5	36,2	38,3	38,3	40,4	40,4	42,5	42,5	44,6
	1331E...SR	44,5	48,2	50,3	50,3	52,4	52,4	54,5	54,5	56,6
	1516E...S	29,1	32,8	34,9	34,9	37,0	37,0	39,1	39,1	41,2
	1516E...SR	29,1	32,8	34,9	34,9	37,0	37,0	39,1	39,1	41,2
	1524E...SR	37,1	40,8	42,9	42,9	45,0	45,0	47,1	47,1	49,2
	AM1524...57	29,7	33,4	35,5	35,5	37,6	37,6	39,7	39,7	41,8

[1] Gearheads with ratios < 3 101:1 have all steel gears.
[2] The reduction ratios are rounded, the exact values are available on request or at www.faulhaber.com.

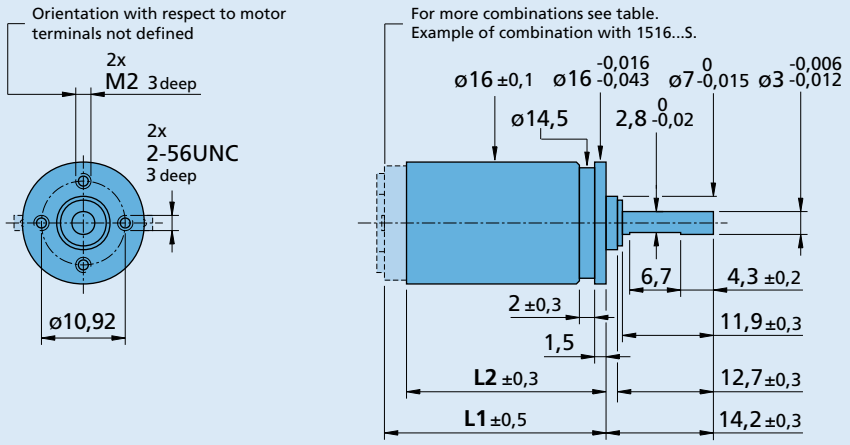

15/5

© DR. FRITZ FAULHABER GMBH & CO. KG
Specifications subject to change without notice.

Spur Gearheads

0,1 Nm

For combination with
DC-Micromotors
Stepper Motors

Series 15/5

	15/5
Housing material	metal
Geartrain material [1]	plastic/steel
Recommended max. input speed for:	
– continuous operation	5 000 min^{-1}
Backlash, at no-load	≤ 3 °
Bearings on output shaft	ball bearings, preloaded
Shaft load, max.:	
– radial (6,5 mm from mounting face)	≤ 25 N
– axial	≤ 5 N
Shaft press fit force, max.	≤ 5 N
Shaft play	
– radial (6,5 mm from mounting face)	≤ 0,03 mm
– axial	= 0 mm
Operating temperature range	- 30 ... + 100 °C

Technical data								
Number of gear stages		**7**	**8**	**8**	**9**	**9**	**10**	**10**
Continuous torque	mNm	100	100	100	100	100	100	100
Intermittent torque	mNm	150	300	150	300	150	300	150
Mass without motor, ca.	g	25	26	26	28	28	30	30
Efficiency, max.	%	48	43	43	39	39	35	35
Direction of rotation, drive to output		≠	=	=	≠	≠	=	=
Reduction ratio [2] (rounded)		**5 752:1**	**10 683:1**	**19 813:1**	**36 796:1**	**68 245:1**	**126 741:1**	**235 067:1**
L2 [mm] = length without motor		38,3	40,4	40,4	42,5	42,5	44,6	44,6
L1 [mm] = length with motor	1319E...SR	44,6	46,7	46,7	48,8	48,8	50,9	50,9
	1331E...SR	56,6	58,7	58,7	60,8	60,8	62,9	62,9
	1516E...S	41,2	43,3	43,3	45,4	45,4	47,5	47,5
	1516E...SR	41,2	43,3	43,3	45,4	45,4	47,5	47,5
	1524E...SR	49,2	51,3	51,3	53,4	53,4	55,5	55,5
	AM1524...57	41,8	43,9	43,9	46,0	46,0	48,1	48,1

[1] Gearheads with ratios < 3 101:1 have all steel gears.
[2] The reduction ratios are rounded, the exact values are available on request or at www.faulhaber.com.

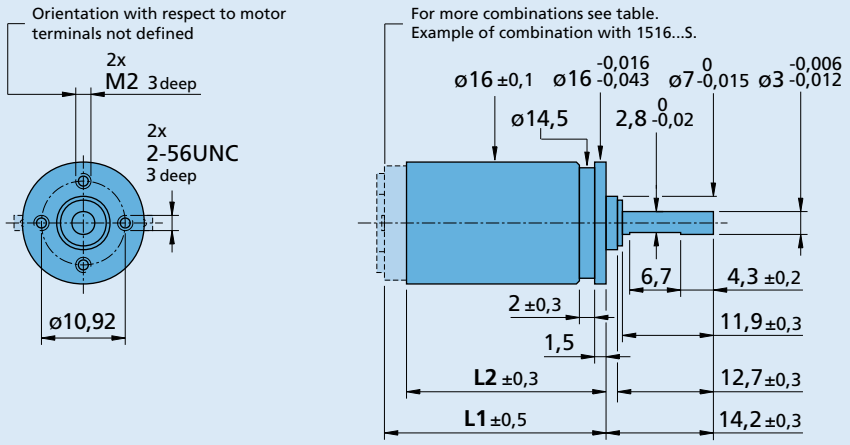

15/5

© DR. FRITZ FAULHABER GMBH & CO. KG
Specifications subject to change without notice.

Spur Gearheads

0,1 Nm

For combination with
DC-Micromotors
Stepper Motors

Series 15/5 S

	15/5 S
Housing material	metal
Geartrain material	steel
Recommended max. input speed for:	
– continuous operation	5 000 min^{-1}
Backlash, at no-load	≤ 3 °
Bearings on output shaft	ball bearings, preloaded
Shaft load, max.:	
– radial (6,5 mm from mounting face)	≤ 25 N
– axial	≤ 5 N
Shaft press fit force, max.	≤ 5 N
Shaft play	
– radial (6,5 mm from mounting face)	≤ 0,03 mm
– axial	= 0 mm
Operating temperature range	- 30 ... + 100 °C

Technical data										
Number of gear stages		**2**	**3**	**4**	**4**	**5**	**5**	**6**	**6**	**7**
Continuous torque	mNm	60	60	100	100	100	100	100	100	100
Intermittent torque	mNm	150	150	300	150	300	150	300	150	300
Mass without motor, ca.	g	17	19	21	21	22	22	24	24	25
Efficiency, max.	%	81	73	66	66	59	59	53	53	48
Direction of rotation, drive to output		=	≠	=	=	≠	≠	=	=	≠
Reduction ratio [1] (rounded)		**6,3:1** **11,8:1**	**22:1** **41:1**	**76:1**	**141:1**	**262:1**	**485:1**	**900:1**	**1 670:1**	**3 101:1**
L2 [mm] = length without motor		26,2	29,9	32,0	32,0	34,1	34,1	36,2	36,2	38,3
L1 [mm] = length with motor	1319E...SR	32,5	36,2	38,3	38,3	40,4	40,4	42,5	42,5	44,6
	1331E...SR	44,5	48,2	50,3	50,3	52,4	52,4	54,5	54,5	56,6
	1516E...S	29,1	32,8	34,9	34,9	37,0	37,0	39,1	39,1	41,2
	1516E...SR	29,1	32,8	34,9	34,9	37,0	37,0	39,1	39,1	41,2
	1524E...SR	37,1	40,8	42,9	42,9	45,0	45,0	47,1	47,1	49,2
	AM1524...57	29,7	33,4	35,5	35,5	37,6	37,6	39,7	39,7	41,8

[1] The reduction ratios are rounded, the exact values are available on request or at www.faulhaber.com.

Note: The gearheads as S-type have all steel gears and heavy duty lubricant for extended lifetime performance.

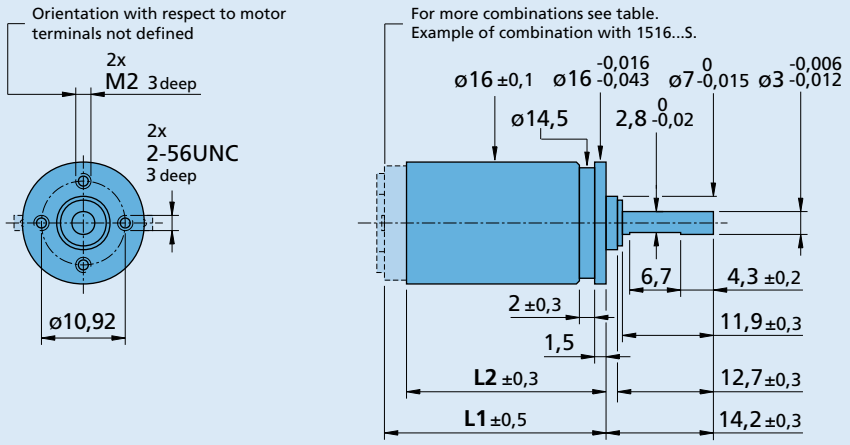

15/5 S

For notes on technical data and lifetime performance refer to "Technical Information".

Edition 2020 Feb. 18

Backwards

© DR. FRITZ FAULHABER GMBH & CO. KG
Specifications subject to change without notice.

www.faulhaber.com

Spur Gearheads

0,1 Nm

For combination with
DC-Micromotors
Stepper Motors

Series 15/5 S

	15/5 S
Housing material	metal
Geartrain material	steel
Recommended max. input speed for:	
– continuous operation	5 000 min^{-1}
Backlash, at no-load	≤ 3 °
Bearings on output shaft	ball bearings, preloaded
Shaft load, max.:	
– radial (6,5 mm from mounting face)	≤ 25 N
– axial	≤ 5 N
Shaft press fit force, max.	≤ 5 N
Shaft play	
– radial (6,5 mm from mounting face)	≤ 0,03 mm
– axial	= 0 mm
Operating temperature range	- 30 ... + 100 °C

Technical data								
Number of gear stages		**7**	**8**	**8**	**9**	**9**	**10**	**10**
Continuous torque	mNm	100	100	100	100	100	100	100
Intermittent torque	mNm	150	300	150	300	150	300	150
Mass without motor, ca.	g	25	26	26	28	28	30	30
Efficiency, max.	%	48	43	43	39	39	35	35
Direction of rotation, drive to output		≠	=	=	≠	≠	=	=
Reduction ratio [1] (rounded)		**5 752:1**	**10 683:1**	**19 813:1**	**36 796:1**	**68 245:1**	**126 741:1**	**235 067:1**
L2 [mm] = length without motor		38,3	40,4	40,4	42,5	42,5	44,6	44,6
L1 [mm] = length with motor	1319E...SR	44,6	46,7	46,7	48,8	48,8	50,9	50,9
	1331E...SR	56,6	58,7	58,7	60,8	60,8	62,9	62,9
	1516E...S	41,2	43,3	43,3	45,4	45,4	47,5	47,5
	1516E...SR	41,2	43,3	43,3	45,4	45,4	47,5	47,5
	1524E...SR	49,2	51,3	51,3	53,4	53,4	55,5	55,5
	AM1524...57	41,8	43,9	43,9	46,0	46,0	48,1	48,1

[1] The reduction ratios are rounded, the exact values are available on request or at www.faulhaber.com.

Note: The gearheads as S-type have all steel gears and heavy duty lubricant for extended lifetime performance.

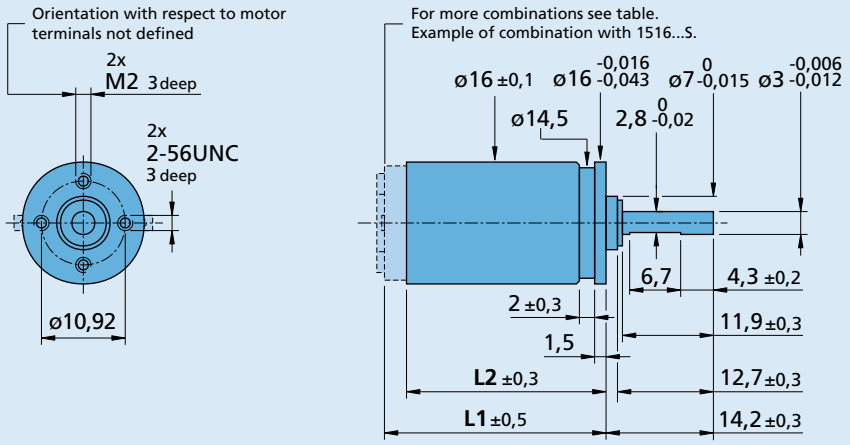

15/5 S

© DR. FRITZ FAULHABER GMBH & CO. KG
Specifications subject to change without notice.
www.faulhaber.com

Spur Gearheads

Zero Backlash

0,1 Nm

For combination with
DC-Micromotors
Stepper Motors

Series 15/8

	15/8
Housing material	metal
Geartrain material	steel
Recommended max. input speed for:	
– continuous operation	5 000 min^{-1}
Backlash, at no-load	0 °
Bearings on output shaft	ball bearings, preloaded
Shaft load, max.:	
– radial (6,5 mm from mounting face)	≤ 25 N
– axial	≤ 5 N
Shaft press fit force, max.	≤ 5 N
Shaft play	
– radial (6,5 mm from mounting face)	≤ 0,03 mm
– axial	= 0 mm
Operating temperature range	- 30 ... + 100 °C

Technical data							
Number of gear stages		**4**	**4**	**5**	**5**	**6**	**6**
Continuous torque	mNm	100	100	100	100	100	100
Intermittent torque	mNm	300	150	300	150	300	150
Mass without motor, ca.	g	24	24	26	26	28	28
Efficiency, max.		-	-	-	-	-	-
Direction of rotation, drive to output		=	=	≠	≠	=	=
Reduction ratio [1] (rounded)		**76:1**	**141:1**	**262:1**	**485:1**	**900:1**	**1 670:1**
L2 [mm] = length without motor		32,0	32,0	34,1	34,1	36,2	36,2
L1 [mm] = length with motor	1516E...SR	34,9	34,9	37,0	37,0	39,1	39,1
	1524E...SR	42,9	42,9	45,0	45,0	47,1	47,1
	AM1524...57	35,5	35,5	37,6	37,6	39,7	39,7

[1] The reduction ratios are rounded, the exact values are available on request or at www.faulhaber.com.

Note: These gearheads are available only with motors mounted.

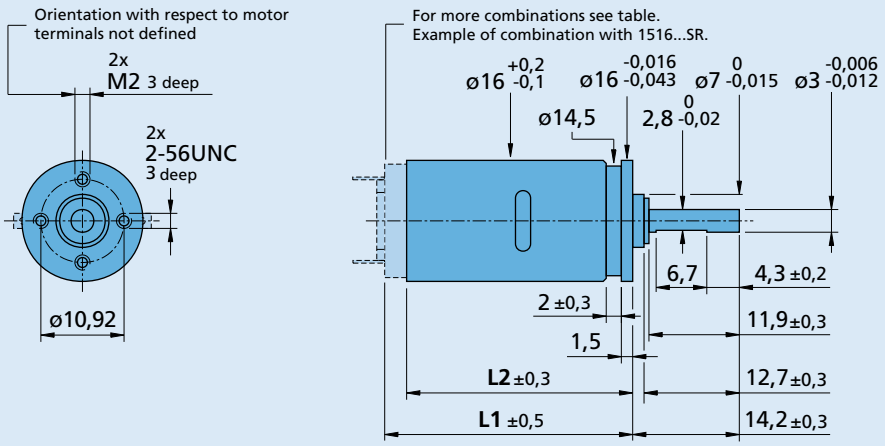

15/8

© DR. FRITZ FAULHABER GMBH & CO. KG
Specifications subject to change without notice.

Planetary Gearheads

0,35 Nm

For combination with
DC-Micromotors
Brushless DC-Motors
Stepper Motors

Series 15/10

	15/10	15/10K
Housing material	stainless steel	stainless steel
Geartrain material	steel	steel
Recommended max. input speed for:		
– continuous operation	6 000 min^{-1}	6 000 min^{-1}
Backlash, at no-load	≤ 1,5 °	≤ 1,5 °
Bearings on output shaft	sintered bearings	ball bearings, preloaded
Shaft load, max.:		
– radial (6,5 mm from mounting face)	≤ 4 N	≤ 30 N
– axial	≤ 3 N	≤ 5 N
Shaft press fit force, max.	≤ 100 N	≤ 25 N
Shaft play		
– radial (6,5 mm from mounting face)	≤ 0,05 mm	≤ 0,03 mm
– axial	≤ 0,1 mm	= 0 mm
Operating temperature range	- 30 ... + 100 °C	- 30 ... + 100 °C

Technical data						
Number of gear stages		**1**	**2**	**3**	**4**	**5**
Continuous torque	mNm	350	350	350	350	350
Intermittent torque	mNm	500	500	500	500	500
Mass without motor, ca.	g	19	23	27	31	35
Efficiency, max.	%	90	80	70	60	50
Direction of rotation, drive to output		=	=	=	=	=
Reduction ratio [1] (rounded)		**3,33:1** **4,5:1**	**11:1** **15:1** **20:1**	**37:1** **44:1** **50:1** **68:1** **81:1** **91:1**	**123:1** **148:1** **167:1** **178:1** **200:1** **240:1** **270:1** **304:1** **365:1**	**412:1** **494:1** **593:1** **667:1** **750:1** **800:1** **900:1** **1 013:1** **1 367:1**
L2 [mm] = length without motor		17,1	21,3	25,4	29,5	33,6
L1 [mm] = length with motor	1516T...SR	32,9	37,1	41,2	45,3	49,4
	1524T...SR	40,9	45,1	49,2	53,3	57,4
	1624T...S	40,9	45,1	49,2	53,3	57,4
	1717T...SR	34,1	38,3	42,4	46,5	50,6
	1724T...SR	41,1	45,3	49,4	53,5	57,6
	1727U...CXR	44,3	48,5	52,6	56,7	60,8
	1741U...CXR	58,3	62,5	66,6	70,7	74,8
	1628T...B	45,1	49,3	53,4	57,5	61,6
	1645U...BHS	62,5	66,7	70,8	74,9	79,0
	1660U...BHS/BHT	77,5	81,7	85,8	89,9	94,0
	AM1524...55	33,5	37,7	41,8	45,9	50,0

[1] The reduction ratios are rounded, the exact values are available on request or at www.faulhaber.com.

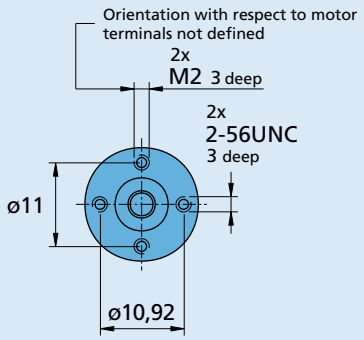

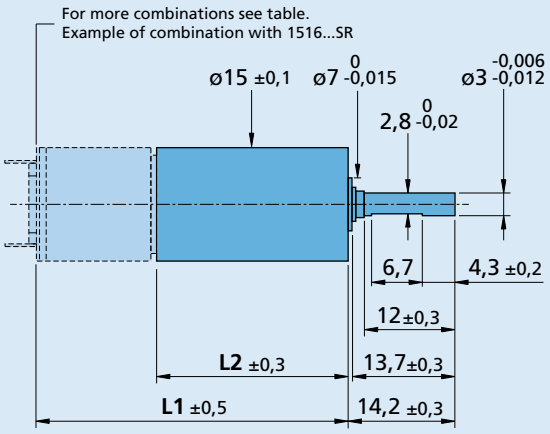

15/10

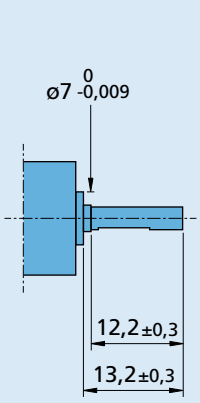

15/10 K

For notes on technical data and lifetime performance refer to "Technical Information".

Edition 2020 Feb. 18

Backwards

© DR. FRITZ FAULHABER GMBH & CO. KG
Specifications subject to change without notice.

www.faulhaber.com

Spur Gearheads

0,03 Nm

For combination with
DC-Micromotors
Stepper Motors

Series 16A

	16A	16AC	16AK
Housing material	plastic	plastic	plastic
Geartrain material	metal	metal	metal
Recommended max. input speed for:			
– continuous operation	5 000 min^{-1}	5 000 min^{-1}	5 000 min^{-1}
Backlash, at no-load	≤ 4 °	≤ 4 °	≤ 4 °
Bearings on output shaft	sintered bearings	ceramic bearings	ball bearings
Shaft load, max.:			
– radial (5 mm from mounting face)	≤ 2 N	≤ 6 N	≤ 10 N
– axial	≤ 1 N	≤ 2 N	≤ 5 N
Shaft press fit force, max.	≤ 10 N	≤ 10 N	≤ 10 N
Shaft play:			
– radial (5 mm from mounting face)	≤ 0,05 mm	≤ 0,06 mm	≤ 0,06 mm
– axial	≤ 0,25 mm	≤ 0,25 mm	≤ 0,25 mm
Operating temperature range	- 30 ... + 65 °C	- 20 ... + 65 °C	- 30 ... + 65 °C

Technical data									
Number of gear stages		**2**	**3**	**3**	**4**	**4**	**5**	**6**	**7**
Continuous torque	mNm	10	10	20	20	30	30	30	30
Intermittent torque	mNm	100	100	100	100	100	100	100	100
Mass without motor, ca.	g	3	4	4	4	4	5	5	6
Efficiency, max.	%	81	73	73	66	66	59	53	48
Direction of rotation, drive to output		=	≠	≠	=	=	≠	=	≠
Reduction ratio [1] (rounded)		**11,9:1**	**22:1**	**41:1**	**76:1**	**141:1**	**262:1** **485:1**	**900:1** **1 670:1**	**3 101:1** **5 752:1**
L2 [mm] = length without motor		9,2	11,0	11,0	12,8	12,8	14,5	16,3	18,0
L1 [mm] = length with motor	1516E...S	25,0	26,8	26,8	28,6	28,6	30,3	32,1	33,8
	1516E...SR	25,0	26,8	26,8	28,6	28,6	30,3	32,1	33,8
	1524E...SR	33,0	34,8	34,8	36,6	36,6	38,3	40,1	41,8
	1624E...S	33,0	34,8	34,8	36,6	36,6	38,3	40,1	41,8
	1717E...SR	26,2	28,0	28,0	29,8	29,8	31,5	33,3	35,0
	1724E...SR	33,2	35,0	35,0	36,8	36,8	38,5	40,3	42,0
	AM1524...57	25,6	27,4	27,4	29,2	29,2	30,9	32,7	34,4

[1] The reduction ratios are rounded, the exact values are available on request or at www.faulhaber.com.

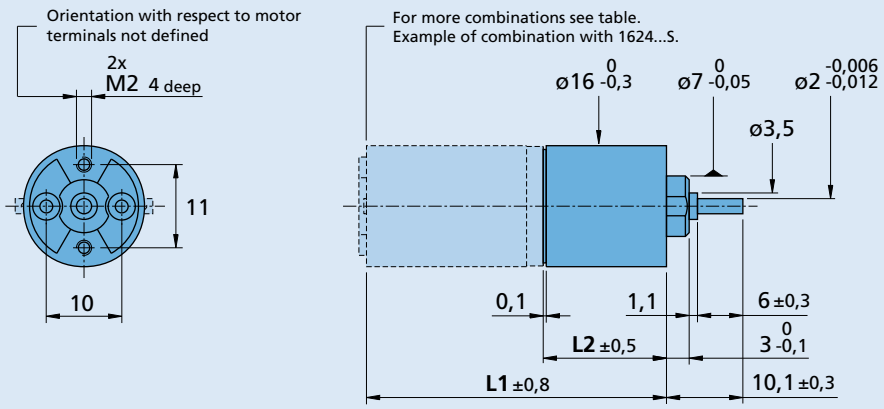

16A, 16AC, 16AK

For notes on technical data and lifetime performance refer to "Technical Information".

Edition 2021 Dec.10

Backwards

© DR. FRITZ FAULHABER GMBH & CO. KG
Specifications subject to change without notice.

www.faulhaber.com

Spur Gearheads

0,1 Nm

For combination with
DC-Micromotors

Series 16/5

	16/5
Housing material	metal
Geartrain material [1]	plastic/steel
Recommended max. input speed for:	
– continuous operation	5 000 min^{-1}
Backlash, at no-load	≤ 3 °
Bearings on output shaft	ball bearings, preloaded
Shaft load, max.:	
– radial (6,5 mm from mounting face)	≤ 25 N
– axial	≤ 5 N
Shaft press fit force, max.	≤ 5 N
Shaft play	
– radial (6,5 mm from mounting face)	≤ 0,03 mm
– axial	= 0 mm
Operating temperature range	- 30 ... + 100 °C

Technical data										
Number of gear stages		**2**	**3**	**4**	**4**	**5**	**5**	**6**	**6**	**7**
Continuous torque	mNm	60	60	100	100	100	100	100	100	100
Intermittent torque	mNm	150	150	300	150	300	150	300	150	300
Mass without motor, ca.	g	17	19	21	21	22	22	24	24	25
Efficiency, max.	%	81	73	66	66	59	59	53	53	48
Direction of rotation, drive to output		=	≠	=	=	≠	≠	=	=	≠
Reduction ratio [2] (rounded)		**6,3:1** **11,8:1**	**22:1** **41:1**	**76:1**	**141:1**	**262:1**	**485:1**	**900:1**	**1 670:1**	**3 101:1**
L2 [mm] = length without motor		26,2	29,9	32,0	32,0	34,1	34,1	36,2	36,2	38,3
L1 [mm] = length with motor 1624E...S		37,1	40,8	42,9	42,9	45,0	45,0	47,1	47,1	49,2

[1] Gearheads with ratios < 3 101:1 have all steel gears.
[2] The reduction ratios are rounded, the exact values are available on request or at www.faulhaber.com.

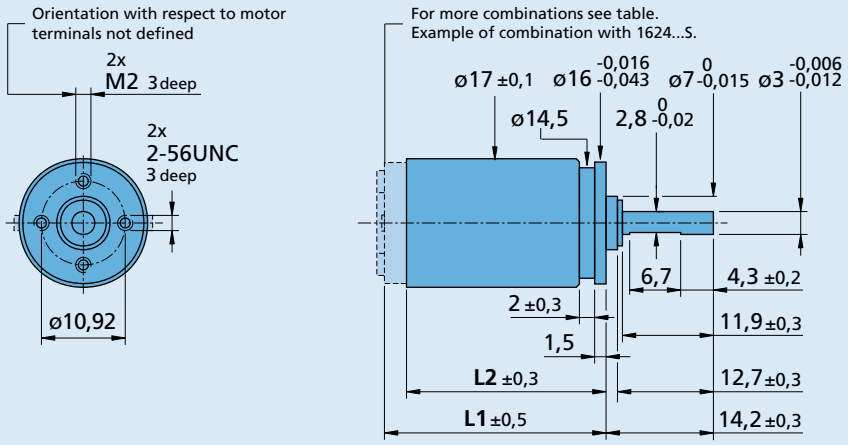

16/5

For notes on technical data and lifetime performance refer to "Technical Information".

Edition 2020 Feb. 18

© DR. FRITZ FAULHABER GMBH & CO. KG
Specifications subject to change without notice.

www.faulhaber.com

Spur Gearheads

0,1 Nm

For combination with
DC-Micromotors

Series 16/5

	16/5
Housing material	metal
Geartrain material [1]	plastic/steel
Recommended max. input speed for:	
– continuous operation	5 000 min^{-1}
Backlash, at no-load	≤ 3 °
Bearings on output shaft	ball bearings, preloaded
Shaft load, max.:	
– radial (6,5 mm from mounting face)	≤ 25 N
– axial	≤ 5 N
Shaft press fit force, max.	≤ 5 N
Shaft play	
– radial (6,5 mm from mounting face)	≤ 0,03 mm
– axial	= 0 mm
Operating temperature range	- 30 ... + 100 °C

Technical data								
Number of gear stages		**7**	**8**	**8**	**9**	**9**	**10**	**10**
Continuous torque	mNm	100	100	100	100	100	100	100
Intermittent torque	mNm	150	300	150	300	150	300	150
Mass without motor, ca.	g	25	26	26	28	28	30	30
Efficiency, max.	%	48	43	43	39	39	35	35
Direction of rotation, drive to output		≠	=	=	≠	≠	=	=
Reduction ratio [2] (rounded)		**5 752:1**	**10 683:1**	**19 813:1**	**36 796:1**	**68 245:1**	**126 741:1**	**235 067:1**
L2 [mm] = length without motor		38,3	40,4	40,4	42,5	42,5	44,6	44,6
L1 [mm] = length with motor 1624E...S		49,2	51,3	51,3	53,4	53,4	55,5	55,5

[1] Gearheads with ratios < 3 101:1 have all steel gears.
[2] The reduction ratios are rounded, the exact values are available on request or at www.faulhaber.com.

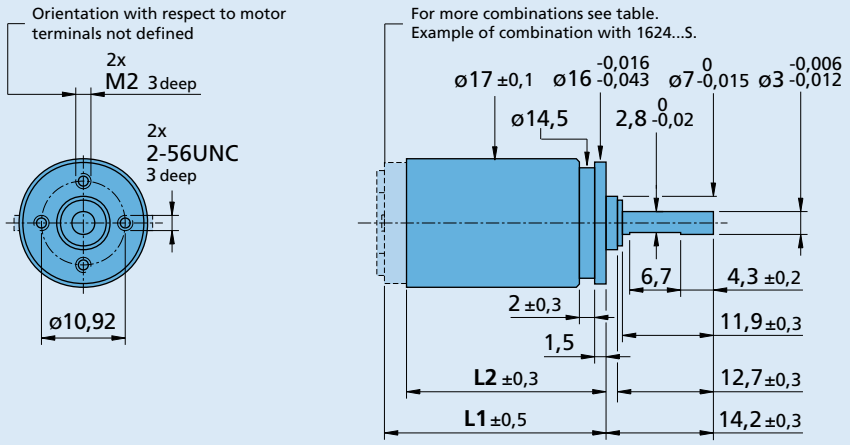

16/5

© DR. FRITZ FAULHABER GMBH & CO. KG
Specifications subject to change without notice.
www.faulhaber.com

Spur Gearheads

0,1 Nm

For combination with
DC-Micromotors

Series 16/5 S

	16/5 S
Housing material	metal
Geartrain material	steel
Recommended max. input speed for:	
– continuous operation	5 000 min^{-1}
Backlash, at no-load	≤ 3 °
Bearings on output shaft	ball bearings, preloaded
Shaft load, max.:	
– radial (6,5 mm from mounting face)	≤ 25 N
– axial	≤ 5 N
Shaft press fit force, max.	≤ 5 N
Shaft play	
– radial (6,5 mm from mounting face)	≤ 0,03 mm
– axial	= 0 mm
Operating temperature range	- 30 ... + 100 °C

Technical data										
Number of gear stages		**2**	**3**	**4**	**4**	**5**	**5**	**6**	**6**	**7**
Continuous torque	mNm	60	60	100	100	100	100	100	100	100
Intermittent torque	mNm	150	150	300	150	300	150	300	150	300
Mass without motor, ca.	g	17	19	21	21	22	22	24	24	25
Efficiency, max.	%	81	73	66	66	59	59	53	53	48
Direction of rotation, drive to output		=	≠	=	=	≠	≠	=	=	≠
Reduction ratio [1] (rounded)		**6,3:1** **11,8:1**	**22:1** **41:1**	**76:1**	**141:1**	**262:1**	**485:1**	**900:1**	**1 670:1**	**3 101:1**
L2 [mm] = length without motor		26,2	29,9	32,0	32,0	34,1	34,1	36,2	36,2	38,3
L1 [mm] = length with motor 1624E...S		37,1	40,8	42,9	42,9	45,0	45,0	47,1	47,1	49,2

[1] The reduction ratios are rounded, the exact values are available on request or at www.faulhaber.com.

Note: The gearheads as S-type have all steel gears and heavy duty lubricant for extended lifetime performance.

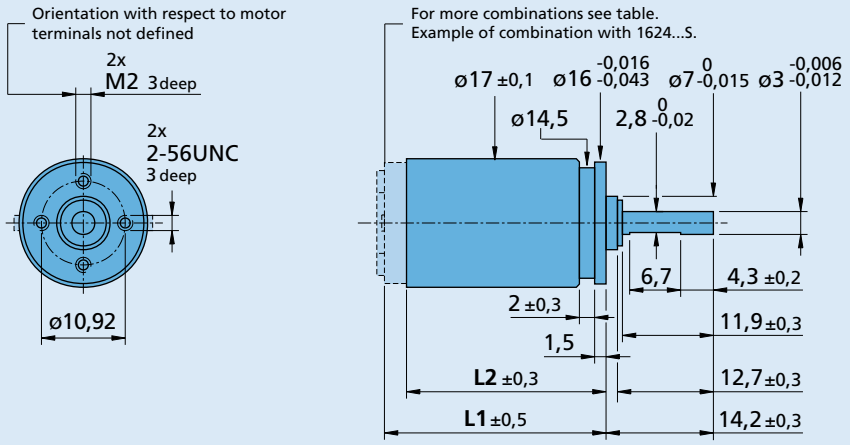

16/5 S

For notes on technical data and lifetime performance refer to "Technical Information".

Edition 2020 Feb. 18

© DR. FRITZ FAULHABER GMBH & CO. KG
Specifications subject to change without notice.

www.faulhaber.com

Spur Gearheads

0,1 Nm

For combination with
DC-Micromotors

Series 16/5 S

	16/5 S
Housing material	metal
Geartrain material	steel
Recommended max. input speed for:	
– continuous operation	5 000 min^{-1}
Backlash, at no-load	≤ 3 °
Bearings on output shaft	ball bearings, preloaded
Shaft load, max.:	
– radial (6,5 mm from mounting face)	≤ 25 N
– axial	≤ 5 N
Shaft press fit force, max.	≤ 5 N
Shaft play	
– radial (6,5 mm from mounting face)	≤ 0,03 mm
– axial	= 0 mm
Operating temperature range	- 30 ... + 100 °C

Technical data								
Number of gear stages		**7**	**8**	**8**	**9**	**9**	**10**	**10**
Continuous torque	mNm	100	100	100	100	100	100	100
Intermittent torque	mNm	150	300	150	300	150	300	150
Mass without motor, ca.	g	25	26	26	28	28	30	30
Efficiency, max.	%	48	43	43	39	39	35	35
Direction of rotation, drive to output		≠	=	=	≠	≠	=	=
Reduction ratio [1] (rounded)		**5 752:1**	**10 683:1**	**19 813:1**	**36 796:1**	**68 245:1**	**126 741:1**	**235 067:1**
L2 [mm] = length without motor		38,3	40,4	40,4	42,5	42,5	44,6	44,6
L1 [mm] = length with motor 1624E...S		49,2	51,3	51,3	53,4	53,4	55,5	55,5

[1] The reduction ratios are rounded, the exact values are available on request or at www.faulhaber.com.

Note: The gearheads as S-type have all steel gears and heavy duty lubricant for extended lifetime performance.

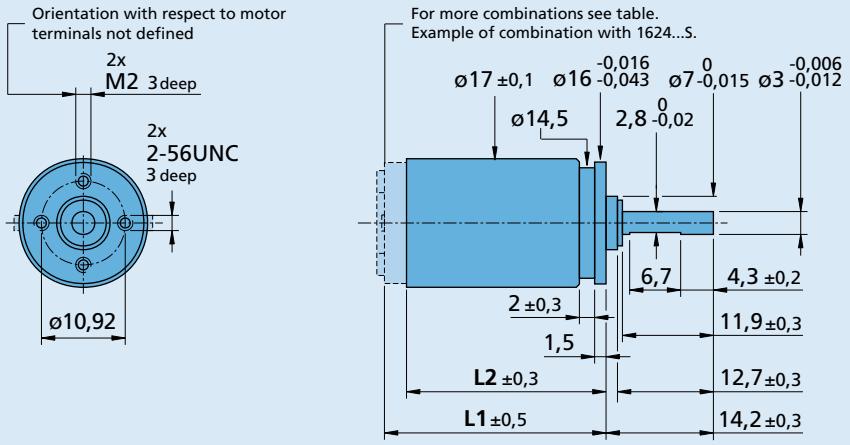

16/5 S

© DR. FRITZ FAULHABER GMBH & CO. KG
Specifications subject to change without notice.
www.faulhaber.com

Planetary Gearheads

0,3 Nm

For combination with
DC-Micromotors
Brushless DC-Motors
Stepper Motors

Series 16/7

	16/7
Housing material	metal
Geartrain material	steel
Recommended max. input speed for:	
– continuous operation	5 000 min^{-1}
Backlash, at no-load	≤ 1 °
Bearings on output shaft	ball bearings, preloaded
Shaft load, max.:	
– radial (6,5 mm from mounting face)	≤ 30 N
– axial	≤ 5 N
Shaft press fit force, max.	≤ 25 N
Shaft play	
– radial (6,5 mm from mounting face)	≤ 0,03 mm
– axial	= 0 mm
Operating temperature range	- 30 ... + 100 °C

Technical data

Number of gear stages		**1**	**2**	**3**	**4**	**5**	**6**
Continuous torque	mNm	200	300	300	300	300	300
Intermittent torque	mNm	300	450	450	450	450	450
Mass without motor, ca.	g	18	23	28	33	38	43
Efficiency, max.	%	90	80	70	60	55	50
Direction of rotation, drive to output		=	=	=	=	=	=
Reduction ratio [1] (rounded)		**3,71:1**	**9,7:1** **14:1**	**43:1** **66:1**	**94:1** **112:1** **134:1** **159:1** **190:1** **246:1**	**415:1** **592:1** **989:1** **1 526:1**	**2 608:1** **4 365:1** **5 647:1**
L2 [mm] = length without motor		17,0	21,2	25,3	29,4	33,5	37,6
L1 [mm] = length with motor	1516T...SR	32,8	37,0	41,1	45,2	49,3	53,4
	1524T...SR	40,8	45,0	49,1	53,2	57,3	61,4
	1624T...S	40,8	45,0	49,1	53,2	57,3	61,4
	1717T...SR	34,0	38,2	42,3	46,4	50,5	54,6
	1724T...SR	41,0	45,2	49,3	53,4	57,5	61,6
	1727U...CXR	44,2	48,4	52,5	56,6	60,7	64,8
	1741U...CXR	58,2	62,4	66,5	70,6	74,7	78,8
	1628T...B	45,0	49,2	53,3	57,4	61,5	65,6
	AM1524...55	33,4	37,6	41,7	45,8	49,9	54,0

[1] The reduction ratios are rounded, the exact values are available on request or at www.faulhaber.com.

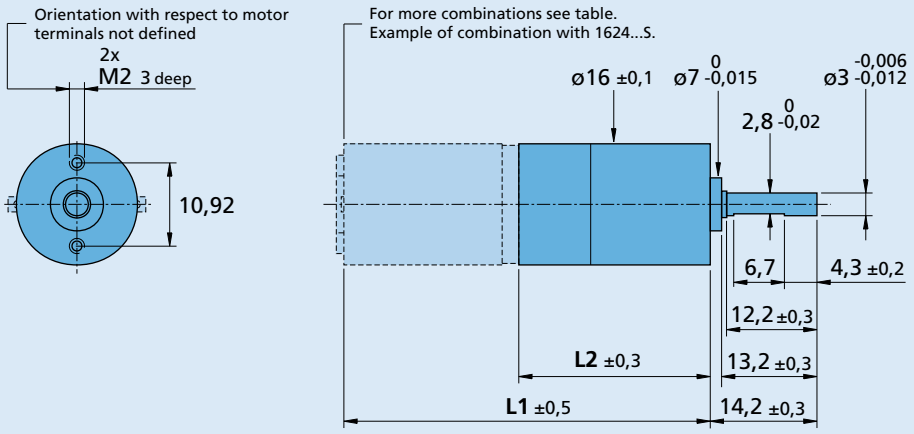

16/7

For notes on technical data and lifetime performance refer to "Technical Information".

Edition 2020 Feb. 18

Backwards

© DR. FRITZ FAULHABER GMBH & CO. KG
Specifications subject to change without notice.

www.faulhaber.com

Spur Gearheads

Zero Backlash

0,1 Nm

For combination with
DC-Micromotors

Series 16/8

	16/8
Housing material	metal
Geartrain material	steel
Recommended max. input speed for:	
– continuous operation	5 000 min^{-1}
Backlash, at no-load	0 °
Bearings on output shaft	ball bearings, preloaded
Shaft load, max.:	
– radial (6,5 mm from mounting face)	≤ 25 N
– axial	≤ 5 N
Shaft press fit force, max.	≤ 5 N
Shaft play	
– radial (6,5 mm from mounting face)	≤ 0,03 mm
– axial	= 0 mm
Operating temperature range	- 30 ... + 100 °C

Technical data							
Number of gear stages		**4**	**4**	**5**	**5**	**6**	**6**
Continuous torque	mNm	100	100	100	100	100	100
Intermittent torque	mNm	300	150	300	150	300	150
Mass without motor, ca.	g	24	24	26	26	28	28
Efficiency, max.		-	-	-	-	-	-
Direction of rotation, drive to output		=	=	≠	≠	=	=
Reduction ratio [1] (rounded)		**76:1**	**141:1**	**262:1**	**485:1**	**900:1**	**1 670:1**
L2 [mm] = length without motor		32,0	32,0	34,1	34,1	36,2	36,2
L1 [mm] = length with motor 1624E...S		42,9	42,9	45,0	45,0	47,1	47,1

[1] The reduction ratios are rounded, the exact values are available on request or at www.faulhaber.com.

Note: These gearheads are available only with motors mounted.

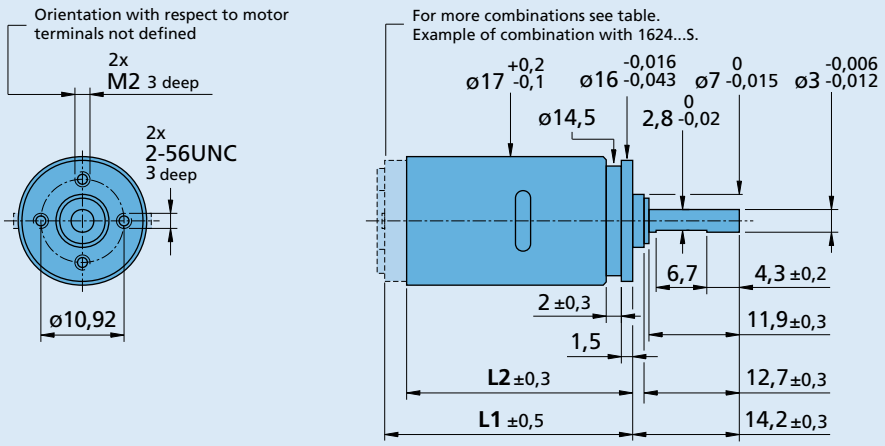

16/8

For notes on technical data and lifetime performance refer to "Technical Information".

Edition 2020 Feb. 18

Backwards

© DR. FRITZ FAULHABER GMBH & CO. KG
Specifications subject to change without notice.

www.faulhaber.com

Planetary Gearheads

0,55 Nm

For combination with
DC-Micromotors
Brushless DC-Motors
Stepper Motors

Series 17/1

	17/1	17/1 K
Housing material	stainless steel	stainless steel
Geartrain material	steel	steel
Recommended max. input speed for:		
– continuous operation	8 000 min^{-1}	8 000 min^{-1}
Backlash, at no-load	≤ 2 °	≤ 2 °
Bearings on output shaft	sintered bearings	ball bearings, preloaded
Shaft load, max.:		
– radial (6,5 mm from mounting face)	≤ 5 N	≤ 75 N
– axial	≤ 3 N	≤ 12 N
Shaft press fit force, max.	≤ 100 N	≤ 35 N
Shaft play		
– radial (6,5 mm from mounting face)	≤ 0,06 mm	≤ 0,03 mm
– axial	≤ 0,1 mm	= 0 mm
Operating temperature range	- 30 ... + 100 °C	- 30 ... + 100 °C

Technical data

Number of gear stages		1	2	3	4	5
Continuous torque	mNm	550	550	550	550	550
Intermittent torque	mNm	800	800	800	800	800
Mass without motor, ca.	g	28	35	42	49	56
Efficiency, max.	%	90	80	70	60	50
Direction of rotation, drive to output		=	=	=	=	=
Reduction ratio [1] (rounded)		**3,33:1** **4,5:1**	**11:1** **15:1** **20:1**	**37:1** **44:1** **50:1** **68:1** **81:1** **91:1**	**123:1** **148:1** **167:1** **178:1** **200:1** **240:1** **270:1** **304:1** **365:1**	**412:1** **494:1** **593:1** **667:1** **750:1** **800:1** **900:1** **1 013:1** **1 367:1**
L2 [mm] = length without motor		18,6	23,7	28,8	33,9	39,1
L1 [mm] = length with motor	1624T...S	42,4	47,5	52,6	57,7	62,9
	1717T...SR	35,6	40,7	45,8	50,9	56,1
	1724T...SR	42,6	47,7	52,8	57,9	63,1
	1727U...CXR	45,8	50,9	56,0	61,1	66,3
	1741U...CXR	59,8	64,9	70,0	75,1	80,3
	1628T...B	46,6	51,7	56,8	61,9	67,1
	1645U...BHS	64,0	69,1	74,2	79,3	84,5
	1660U...BHS/BHT	79,0	84,1	89,2	94,3	99,5
	AM1524...55	35,0	40,1	45,2	50,3	55,5

[1] The reduction ratios are rounded, the exact values are available on request or at www.faulhaber.com.

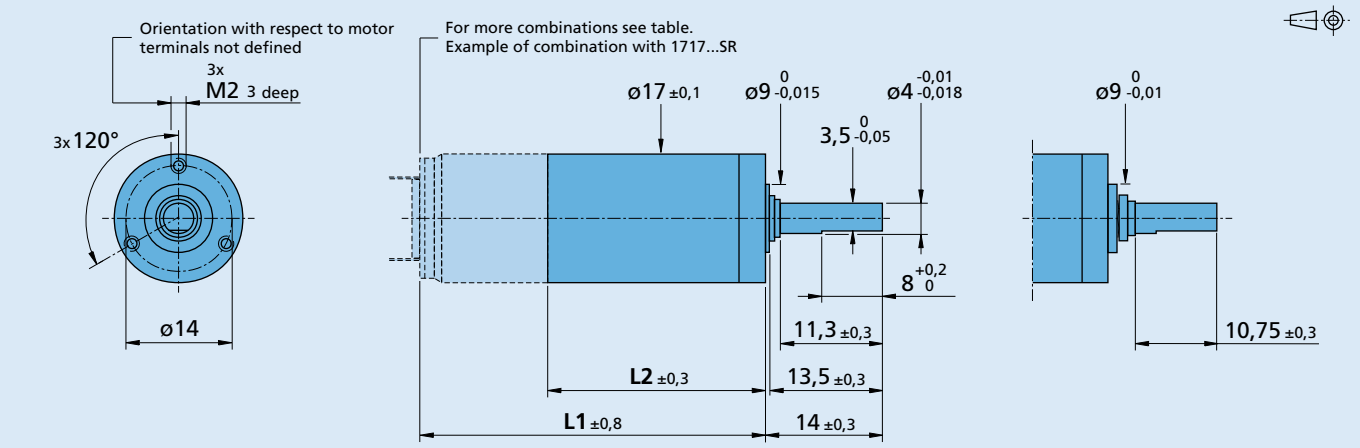

For notes on technical data and lifetime performance refer to "Technical Information".

© DR. FRITZ FAULHABER GMBH & CO. KG
Specifications subject to change without notice.

Planetary Gearheads

0,8 Nm

For combination with
DC-Micromotors
Brushless DC-Motors
Stepper Motors

Series 20/1R

	20/1R
Housing material	steel
Geartrain material	metal
Recommended max. input speed for:	
– continuous operation	12 000 min^{-1}
Backlash, at no-load	≤ 1 °
Bearings on output shaft	ball bearings, preloaded
Shaft load, max.:	
– radial (8,5 mm from mounting face)	≤ 75 N
– axial	≤ 20 N
Shaft press fit force, max.	≤ 35 N
Shaft play	
– radial (8,5 mm from mounting face)	≤ 0,03 mm
– axial	= 0 mm
Operating temperature range [1]	- 10 ... + 125 °C

Technical data								
Number of gear stages		**1**	**2**	**2**	**3**	**3**	**4**	**5**
Continuous torque	mNm	800	800	800	800	800	800	800
Intermittent torque	mNm	1 100	1 100	1 100	1 100	1 100	1 100	1 100
Mass without motor, ca.	g	29	39	39	49	49	59	69
Efficiency, max.	%	88	80	80	70	70	60	55
Direction of rotation, drive to output		=	=	=	=	=	=	=
Reduction ratio [2] (rounded)		**3,71:1**	**9,7:1** **14:1**	**23:1**	**43:1** **66:1**	**86:1**	**112:1** **134:1** **159:1** **190:1** **246:1**	**415:1** **592:1** **989:1** **1 526:1**
L2 [mm] = length without motor [3]		18,4	23,5	23,5	28,6	28,6	33,7	38,8
L1 [mm] = length with motor	1741U...CXR	59,6	64,7	64,7	69,8	69,8	74,9	80,0
	2224U...SR	42,6	47,7	47,7	52,8	52,8	57,9	63,0
	2232U...SR	50,6	55,7	55,7	60,8	60,8	65,9	71,0
	1645U...BHS	63,8	68,9	68,9	74,0	74,0	79,1	84,2
	1660U...BHS/BHT	78,8	83,9	83,9	89,0	89,0	94,1	99,2
	2036U...B	54,4	59,5	59,5	64,6	64,6	69,7	74,8
	2057S...B	77,3	82,4	87,9	87,5	93,0	92,6	97,7
	2214S...BXTH	37,3	42,4	47,9	47,5	53,0	52,6	57,7
	2214S...BXTR	36,5	41,6	47,1	46,7	52,2	51,8	56,9
	AM2224...10	46,1	51,2	51,2	56,3	56,3	61,4	66,5

[1] Low operating temperature range - 45 ... + 100 °C shall be ordered as option - K2823
[2] The reduction ratios are rounded, the exact values are available on request or at www.faulhaber.com.
[3] L2 + 1,9 mm or 7,4 mm, in combination with 2057S...B and 2214...BXT R/H.

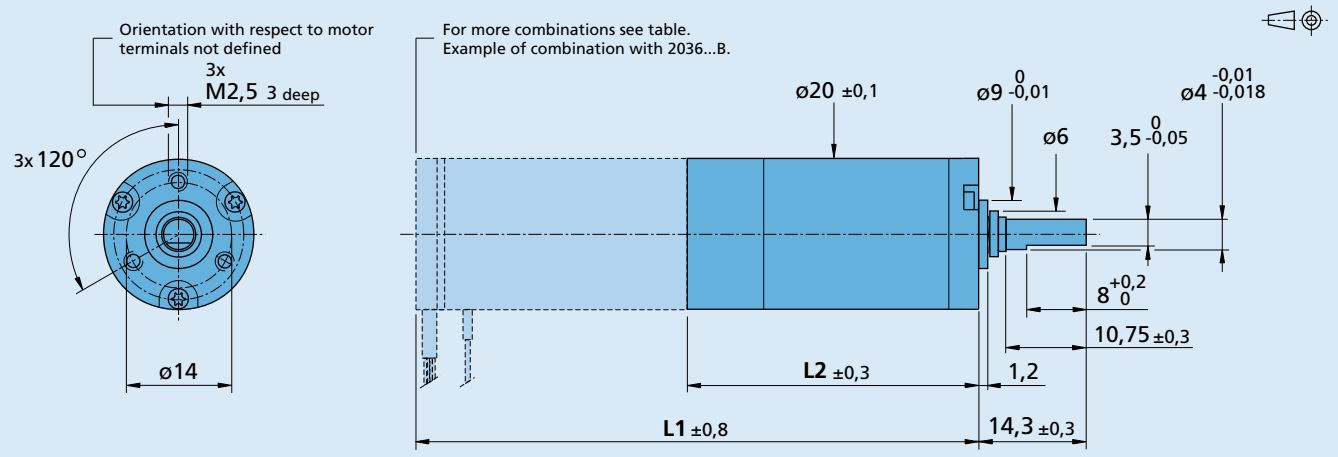

20/1 R

For notes on technical data and lifetime performance refer to "Technical Information".

Edition 2020 Feb. 18

Backwards

© DR. FRITZ FAULHABER GMBH & CO. KG
Specifications subject to change without notice.

www.faulhaber.com

Planetary Gearheads

0,6 Nm

For combination with
DC-Micromotors
Stepper Motors

Series 22E

	22E	22EC	22EK
Housing material	plastic	plastic	plastic
Geartrain material	plastic	plastic	plastic
Recommended max. input speed for:			
– continuous operation	5 000 min^{-1}	5 000 min^{-1}	5 000 min^{-1}
Backlash, at no-load	≤ 3 °	≤ 3 °	≤ 3 °
Bearings on output shaft	sintered bearings	ceramic bearings	ball bearings
Shaft load, max.:			
– radial (5 mm from mounting face)	≤ 3 N	≤ 15 N	≤ 50 N
– axial	≤ 3 N	≤ 2 N	≤ 5 N
Shaft press fit force, max.	≤ 15 N	≤ 15 N	≤ 15 N
Shaft play			
– radial (5 mm from mounting face)	≤ 0,05 mm	≤ 0,06 mm	≤ 0,07 mm
– axial	≤ 0,25 mm	≤ 0,25 mm	≤ 0,25 mm
Operating temperature range	- 30 ... + 65 °C	- 20 ... + 85 °C	- 30 ... + 85 °C

Technical data										
Number of gear stages			2	3	3	4	4	4	5	6
Continuous torque		mNm	200	300	400	400	500	600	600	600
Intermittent torque		mNm	400	600	800	800	1 000	1 000	1 000	1 000
Mass without motor, ca.		g	17	19	19	20	20	20	22	24
Efficiency, max.		%	78	69	67	62	61	60	55	49
Direction of rotation, drive to output			=	=	=	=	=	=	=	=
Reduction ratio [1] (rounded)	Code B [2]		**19:1**	**69:1**		**249:1**			**896:1**	**3 225:1**
	Code A [2]		**28:1**	**102:1**	**152:1**		**369:1**	**546:1** **809:1**	**1 327:1** **1 966:1** **2 913:1** **4 315:1**	**4 778:1** **7 078:1** **10 486:1** **15 534:1** **23 014:1**
L2 [mm] = length without motor [3]			27,1	32,1	32,1	37,1	37,1	37,1	42,1	47,1
L1 [mm] = length with motor	2224A/B...SR		51,3	56,3	56,3	61,3	61,3	61,3	66,3	71,3
	2230A/B...S		57,1	62,1	62,1	67,1	67,1	67,1	72,1	77,1
	2232A/B...SR		59,3	64,3	64,3	69,3	69,3	69,3	74,3	79,3
	2233A/B...S		59,7	64,7	64,7	69,7	69,7	69,7	74,7	79,7
	2237A/B...CXR		64,1	69,1	69,1	74,1	74,1	74,1	79,1	84,1
	AM2224...12		54,8	59,8	59,8	64,8	64,8	64,8	69,8	74,8

[1] The reduction ratios are rounded, the exact values are available on request or at www.faulhaber.com.
[2] Example of ordering information: 2224 **B** 012 SR + 22E 19:1, not for AM2224.
[3] L2 + 0,7 mm, in combination with 2224A/B...SR and 2232A/B...SR.

Note: These gearheads are available only with motors mounted.

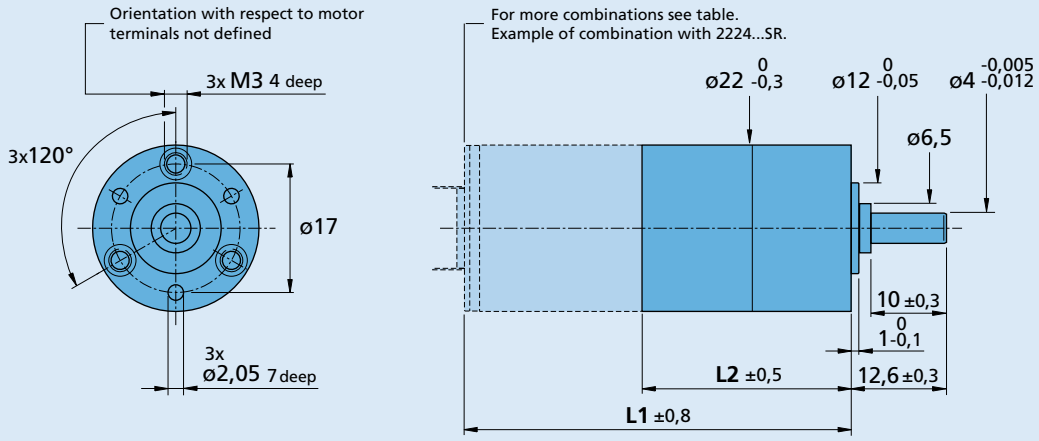

22E, 22EC, 22EK

© DR. FRITZ FAULHABER GMBH & CO. KG
Specifications subject to change without notice.

Planetary Gearheads

1,2 Nm

For combination with
DC-Micromotors
Stepper Motors

Series 22EKV

	22EKV
Housing material	plastic
Geartrain material	plastic/steel/ceramic
Recommended max. input speed for:	
– continuous operation	5 000 min^{-1}
Backlash, at no-load	≤ 3 °
Bearings on output shaft	ball bearings
Shaft load, max.:	
– radial (5 mm from mounting face)	≤ 50 N
– axial	≤ 5 N
Shaft press fit force, max.	≤ 15 N
Shaft play	
– radial (5 mm from mounting face)	≤ 0,07 mm
– axial	≤ 0,25 mm
Operating temperature range	- 30 ... + 85 °C

Technical data

Number of gear stages			**2**	**3**	**3**	**4**	**4**	**4**	**5**	**6**
Continuous torque		Nm	0,4	0,6	0,8	0,8	1	1,2	1,2	1,2
Intermittent torque		Nm	0,8	1,2	1,6	1,6	2	2	2	2
Mass without motor, ca.		g	27	29	29	30	30	30	32	34
Efficiency, max.		%	77	68	68	61	61	61	53	47
Direction of rotation, drive to output			=	=	=	=	=	=	=	=
Reduction ratio [1] (rounded)	Code B [2]		**19:1**	**69:1**		**249:1**			**896:1**	**3 225:1**
	Code A [2]		**28:1**	**102:1**	**152:1**		**369:1**	**546:1** **809:1**	**1 327:1** **1 966:1** **2 913:1** **4 315:1**	**4 778:1** **7 078:1** **10 486:1** **15 534:1** **23 014:1**
L2 [mm] = length without motor [3]			27,1	32,1	32,1	37,1	37,1	37,1	42,1	47,1
L1 [mm] = length with motor	2224A/B...SR		51,3	56,3	56,3	61,3	61,3	61,3	66,3	71,3
	2230A/B...S		57,1	62,1	62,1	67,1	67,1	67,1	72,1	77,1
	2232A/B...SR		59,3	64,3	64,3	69,3	69,3	69,3	74,3	79,3
	2233A/B...S		59,7	64,7	64,7	69,7	69,7	69,7	74,7	79,7
	2237A/B...CXR		64,1	69,1	69,1	74,1	74,1	74,1	79,1	84,1
	AM2224...12		54,8	59,8	59,8	64,8	64,8	64,8	69,8	74,8

[1] The reduction ratios are rounded, the exact values are available on request or at www.faulhaber.com.
[2] Example of ordering information: 2224 **B** 012SR + 22EKV 19:1, not for AM2224.
[3] L2 + 0,7 mm, in combination with 2224A/B...SR and 2232A/B...SR.

Note: These gearheads are available only with motors mounted.

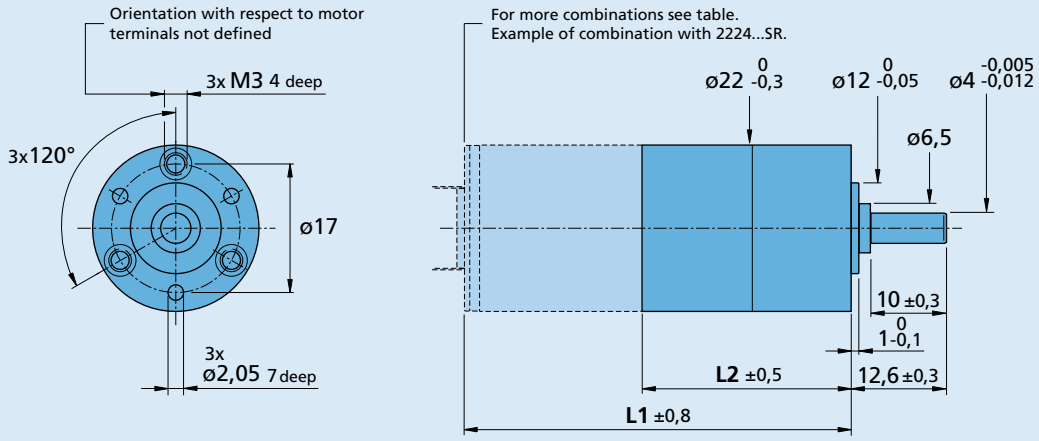

22EKV

For notes on technical data and lifetime performance refer to "Technical Information".

Edition 2020 Feb. 18

Backwards

© DR. FRITZ FAULHABER GMBH & CO. KG
Specifications subject to change without notice.

www.faulhaber.com

Spur Gearheads

0,1 Nm

For combination with
DC-Micromotors
Stepper Motors

Series 22/2

	22/2	22/2K
Housing material	metal	metal
Geartrain material	metal	metal
Recommended max. input speed for:		
– continuous operation	4 000 min^{-1}	4 000 min^{-1}
Backlash, at no-load	≤ 3 °	≤ 3 °
Bearings on output shaft	sintered bearings	ball bearings, preloaded
Shaft load, max.:		
– radial (6 mm from mounting face)	≤ 3 N	≤ 100 N
– axial	≤ 5 N	≤ 5 N
Shaft press fit force, max.	≤ 50 N	≤ 5 N
Shaft play:		
– radial (6 mm from mounting face)	≤ 0,05 mm	≤ 0,03 mm
– axial	≤ 0,2 mm	= 0 mm
Operating temperature range	- 30 ... + 100 °C	- 30 ... + 100 °C

Technical data										
Number of gear stages		**2**	**3**	**4**	**5**	**6**	**7**	**8**	**9**	**10**
Continuous torque	mNm	100	100	100	100	100	100	100	100	100
Intermittent torque	mNm	400	400	400	400	400	400	400	400	400
Mass without motor, ca.	g	58	68	72	77	82	88	93	98	103
Efficiency, max.	%	90	86	81	73	66	59	53	48	43
Direction of rotation, drive to output		=	≠	=	≠	=	≠	=	≠	=
Reduction ratio [1] (rounded)		**3,1:1** **5,4:1**	**9,7:1**	**17,2:1** **30,7:1**	**54,6:1** **97,3:1**	**173:1** **308:1**	**548:1** **975:1**	**1 734:1** **3 088:1**	**5 490:1** **9 780:1**	**17 386:1** **30 969:1**
L2 [mm] = length without motor		40,8	46,6	49,5	52,4	55,3	58,2	61,1	64,0	66,9
L1 [mm] = length with motor	2224R...SR	45,4	50,7	53,6	56,5	59,4	62,3	65,2	68,1	71,0
	2230F/R...S	51,2	56,5	59,4	62,3	65,2	68,1	71,0	73,9	76,8
	2232R...SR	53,4	58,7	61,6	64,5	67,4	70,3	73,2	76,1	79,0
	2233F/R...S	53,8	59,1	62,0	64,9	67,8	70,7	73,6	76,5	79,4
	AM2224...14	48,9	54,2	57,1	60,0	62,9	65,8	68,7	71,6	74,5

[1] The reduction ratios are rounded, the exact values are available on request or at www.faulhaber.com.

Note: L1, L2 = +2,1 mm for Spur Gearheads series 22/2K.

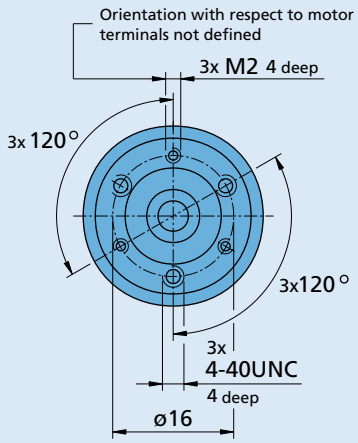

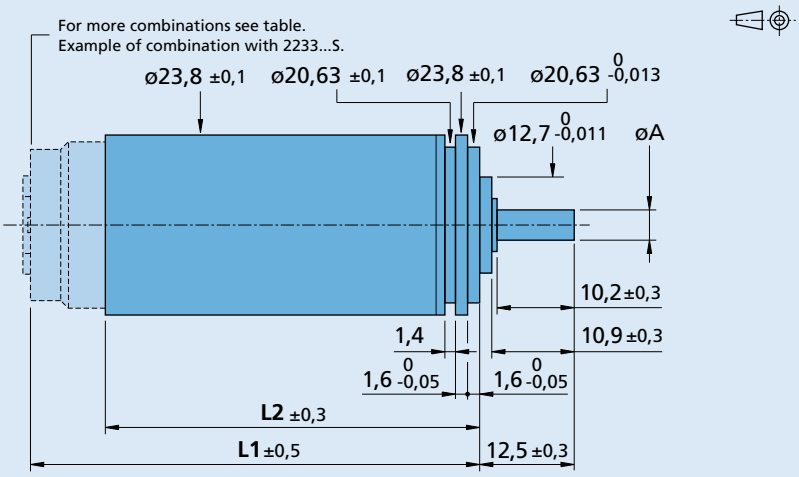

For notes on technical data and lifetime performance refer to "Technical Information".

Edition 2023 Aug. 21

© DR. FRITZ FAULHABER GMBH & CO. KG
Specifications subject to change without notice.

www.faulhaber.com

Spur Gearheads

0,1 Nm

For combination with
DC-Micromotors
Stepper Motors

Series 22/2

	22/2	22/2K
Housing material	metal	metal
Geartrain material	metal	metal
Recommended max. input speed for:		
– continuous operation	4 000 min^{-1}	4 000 min^{-1}
Backlash, at no-load	≤ 3 °	≤ 3 °
Bearings on output shaft	sintered bearings	ball bearings, preloaded
Shaft load, max.:		
– radial (6 mm from mounting face)	≤ 3 N	≤ 100 N
– axial	≤ 5 N	≤ 5 N
Shaft press fit force, max.	≤ 50 N	≤ 5 N
Shaft play:		
– radial (6 mm from mounting face)	≤ 0,05 mm	≤ 0,03 mm
– axial	≤ 0,2 mm	= 0 mm
Operating temperature range	- 30 ... + 100 °C	- 30 ... + 100 °C

Technical data				
Number of gear stages		**11**	**12**	**13**
Continuous torque	mNm	100	100	100
Intermittent torque	mNm	400	400	400
Mass without motor, ca.	g	108	113	118
Efficiency, max.	%	39	35	31
Direction of rotation, drive to output		≠	=	≠
Reduction ratio [1] (rounded)		**55 057:1** **98 070:1**	**174 350:1** **310 560:1**	**552 113:1** **983 447:1**
L2 [mm] = length without motor		69,8	72,7	75,6
L1 [mm] = length with motor	2224R...SR	73,9	76,8	79,7
	2230F/R...S	79,7	82,6	85,5
	2232R...SR	81,9	84,8	87,7
	2233F/R...S	82,3	85,2	88,1
	AM2224...14	77,4	80,3	83,2

[1] The reduction ratios are rounded, the exact values are available on request or at www.faulhaber.com.

Note: L1, L2 = +2,1 mm for Spur Gearheads series 22/2K.

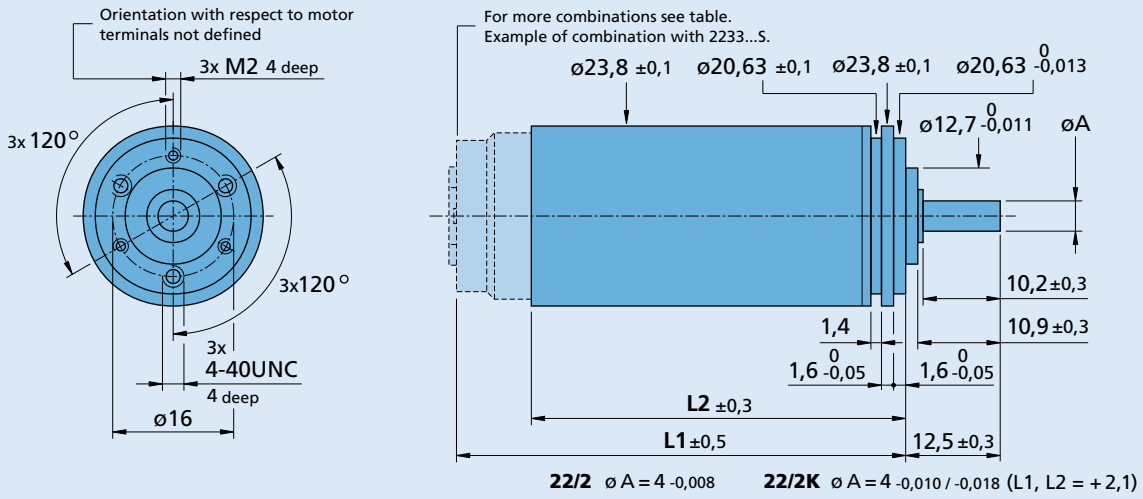

For notes on technical data and lifetime performance refer to "Technical Information".

© DR. FRITZ FAULHABER GMBH & CO. KG
Specifications subject to change without notice.

Spur Gearheads

Zero Backlash

0,1 Nm

For combination with
DC-Micromotors
Stepper Motors

Series 22/5

	22/5
Housing material	metal
Geartrain material	metal
Recommended max. input speed for:	
– continuous operation	4 000 min^{-1}
Backlash, at no-load	0 °
Bearings on output shaft	ball bearings, preloaded
Shaft load, max.:	
– radial (6 mm from mounting face)	≤ 100 N
– axial	≤ 5 N
Shaft press fit force, max.	≤ 5 N
Shaft play	
– radial (6 mm from mounting face)	≤ 0,03 mm
– axial	= 0 mm
Operating temperature range	- 30 ... + 100 °C

Technical data						
Number of gear stages		**5**	**6**	**7**	**8**	**9**
Continuous torque	mNm	100	100	100	100	100
Intermittent torque	mNm	400	400	400	400	400
Mass without motor, ca.	g	80	85	90	95	105
Efficiency, max.		-	-	-	-	-
Direction of rotation, drive to output		≠	=	≠	=	≠
Reduction ratio [1] (rounded)		**69,2:1**	**161:1**	**377:1**	**879:1**	**2 050:1**
L2 [mm] = length without motor		50,9	54,6	59,5	63,2	68,1
L1 [mm] = length with motor	2224R...SR	57,8	61,6	66,5	70,3	75,2
	2230F/R...S	63,6	67,4	72,3	76,1	81,0
	2232R...SR	65,8	69,6	74,5	78,3	83,2
	2233F/R...S	66,2	70,0	74,9	78,7	83,6
	AM2224...14	61,4	65,2	70,1	73,9	78,8

[1] The reduction ratios are rounded, the exact values are available on request or at www.faulhaber.com.

Note: These gearheads are available only with motors mounted.

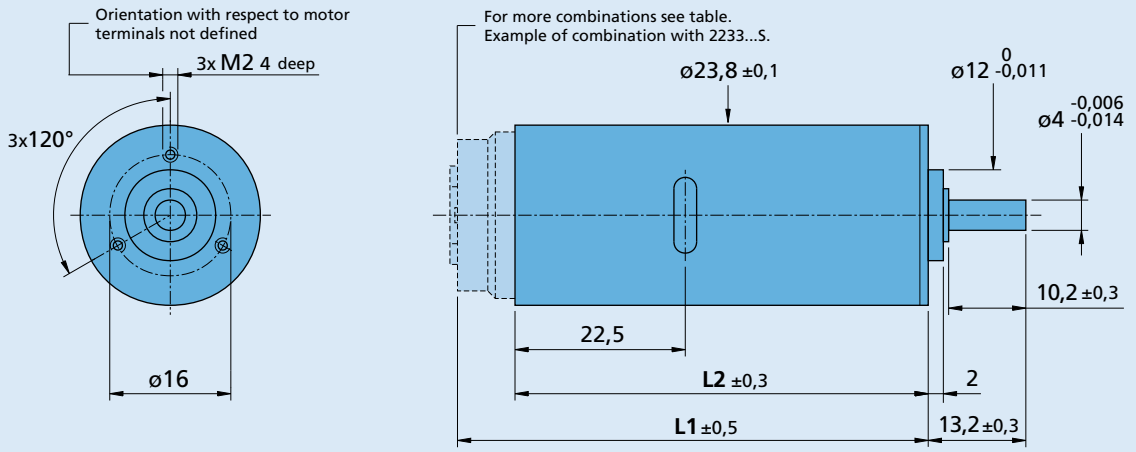

22/5

For notes on technical data and lifetime performance refer to "Technical Information".

Edition 2020 Feb. 18

Backwards

© DR. FRITZ FAULHABER GMBH & CO. KG
Specifications subject to change without notice.

www.faulhaber.com

Planetary Gearheads

0,7 Nm

For combination with
DC-Micromotors
Brushless DC-Motors
Stepper Motors

Series 22/7

	22/7
Housing material	metal
Geartrain material	steel
Recommended max. input speed for:	
– continuous operation	4 000 min^{-1}
Backlash, at no-load	≤ 1 °
Bearings on output shaft	ball bearings, preloaded
Shaft load, max.:	
– radial (10 mm from mounting face)	≤ 170 N
– axial	≤ 150 N
Shaft press fit force, max.	≤ 150 N
Shaft play:	
– radial (10 mm from mounting face)	≤ 0,03 mm
– axial	≤ 0,1 mm
Operating temperature range	- 30 ... + 100 °C

Technical data

Number of gear stages		**1**	**2**	**3**	**4**	**5**
Continuous torque	mNm	200	300	700	700	700
Intermittent torque	mNm	400	600	1 000	1 000	1 000
Mass without motor, ca.	g	68	63	76	88	102
Efficiency, max.	%	88	80	70	60	55
Direction of rotation, drive to output		=	=	=	=	=
Reduction ratio [1] (rounded)		**3,71:1**	**9,7:1** **14:1**	**43:1** **66:1**	**94:1** **112:1** **134:1** **159:1** **190:1** **246:1**	**415:1** **592:1** **989:1** **1 526:1**
L2 [mm] = length without motor [2]		27,9	34,1	40,3	46,4	52,6
L1 [mm] = length with motor	2224U...SR	48,2	54,4	60,6	66,7	72,9
	2230U...S	54,0	60,2	66,4	72,5	78,7
	2232U...SR	56,2	62,4	68,6	74,7	80,9
	2233U...S	56,6	62,8	69,0	75,1	81,3
	2237S...CXR	64,9	71,1	77,3	83,4	89,6
	2342S...CR	69,9	76,1	82,3	88,4	94,6
	2232S...BX4	61,7	67,9	74,1	80,2	86,4
	2250S...BX4	79,7	85,9	92,1	98,2	104,4
	2444S...B	71,9	78,1	84,3	90,4	96,6
	AM2224...10	51,7	57,9	64,1	70,2	76,4

[1] The reduction ratios are rounded, the exact values are available on request or at www.faulhaber.com.
[2] L2 - 3,9 mm, in combination with 2224U...SR, 2230U...S, 2232U...SR, 2233U...S and AM2224.

Note: Reduction ratio 3,71:1 with motor types 2224U...SR, 2230U...S, 2232U...SR, 2233U...S and AM2224 shall be ordered as 22/7 3,71:1 - K288.

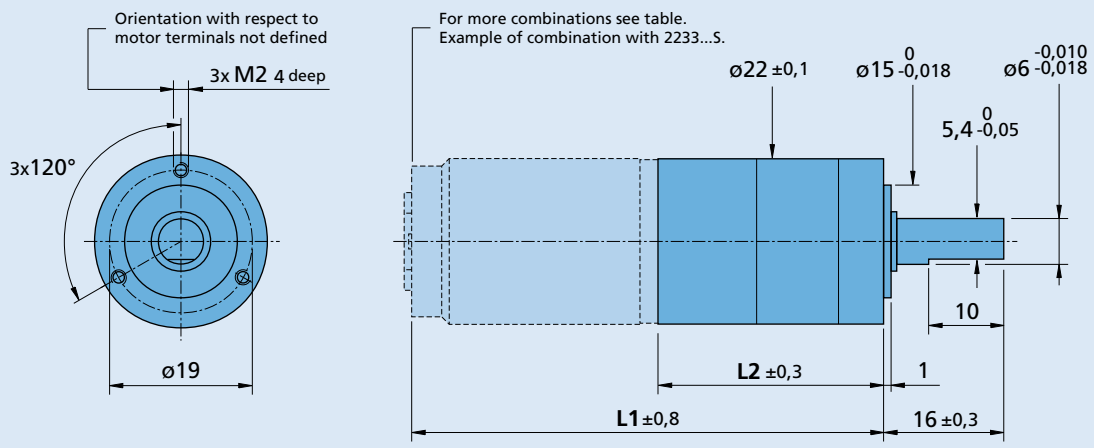

22/7

For notes on technical data and lifetime performance refer to "Technical Information".

Edition 2022 Feb. 28

Backwards

© DR. FRITZ FAULHABER GMBH & CO. KG
Specifications subject to change without notice.

www.faulhaber.com

Planetary Gearheads

0,7 Nm

For combination with
DC-Micromotors
Brushless DC-Motors
Stepper Motors

Series 23/1

	23/1
Housing material	metal
Geartrain material	steel
Recommended max. input speed for:	
– continuous operation	4 000 min^{-1}
Backlash, at no-load	≤ 1 °
Bearings on output shaft	ball bearings, preloaded
Shaft load, max.:	
– radial (10 mm from mounting face)	≤ 170 N
– axial	≤ 150 N
Shaft press fit force, max.	≤ 150 N
Shaft play	
– radial (10 mm from mounting face)	≤ 0,03 mm
– axial	≤ 0,1 mm
Operating temperature range	- 30 ... + 100 °C

Technical data

Number of gear stages		**1**	**2**	**3**	**4**	**5**
Continuous torque	mNm	200	300	700	700	700
Intermittent torque	mNm	400	600	1 000	1 000	1 000
Mass without motor, ca.	g	60	70	90	100	110
Efficiency, max.	%	88	80	70	60	55
Direction of rotation, drive to output		=	=	=	=	=
Reduction ratio [1] (rounded)		**3,71:1**	**9,7:1** **14:1**	**43:1** **66:1**	**94:1** **112:1** **134:1** **159:1** **190:1** **246:1**	**415:1** **592:1** **989:1** **1 526:1**
L2 [mm] = length without motor [2]		27,9	34,1	40,3	46,4	52,6
L1 [mm] = length with motor	2224U...SR	48,2	54,4	60,6	66,7	72,9
	2230U...S	54,0	60,2	66,4	72,5	78,7
	2232U...SR	56,2	62,4	68,6	74,7	80,9
	2233U...S	56,6	62,8	69,0	75,1	81,3
	2237S...CXR	64,9	71,1	77,3	83,4	89,6
	2342S...CR	69,9	76,1	82,3	88,4	94,6
	2057S...B	84,9	91,1	97,3	103,4	109,6
	2444S...B	71,9	78,1	84,3	90,4	96,6
	AM2224...10	51,7	57,9	64,1	70,2	76,4

[1] The reduction ratios are rounded, the exact values are available on request or at www.faulhaber.com.
[2] L2 - 3,9 mm, in combination with 2224U...SR, 2230U...S, 2232U...SR, 2233U...S and AM2224.

Note: Reduction ratio 3,71:1 with motor types 2224U...SR, 2230U...S, 2232U...SR, 2233U...S and AM2224 shall be ordered as 23/1 3,71:1 - K288.

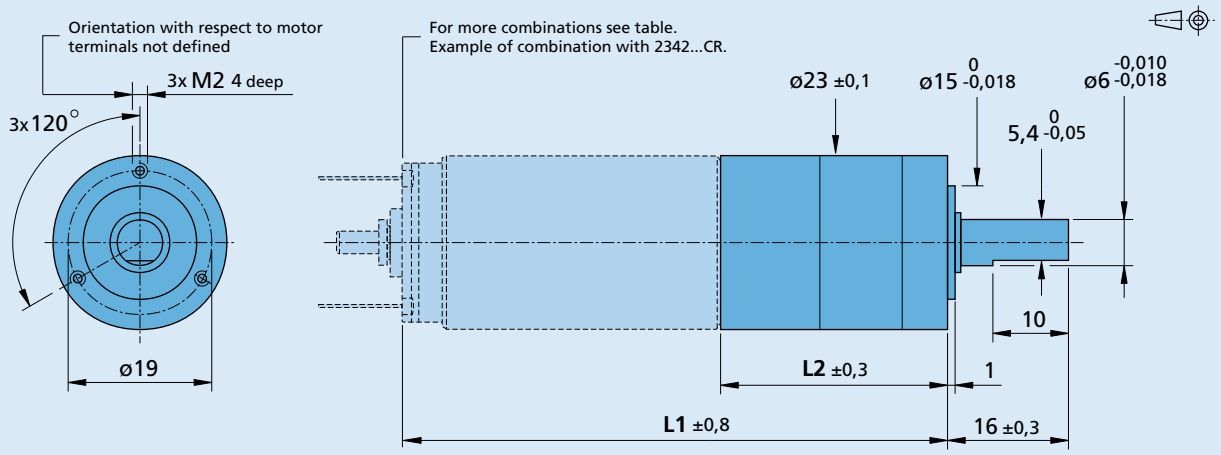

23/1

For notes on technical data and lifetime performance refer to "Technical Information".

Edition 2020 Feb. 18

Backwards

© DR. FRITZ FAULHABER GMBH & CO. KG
Specifications subject to change without notice.

www.faulhaber.com

Planetary Gearheads

1 Nm

For combination with
Brushless DC-Motors
DC-Micromotors

Series 26A

	26A	26AK
Housing material	plastic	plastic
Geartrain material	plastic	plastic
Recommended max. input speed for:		
– continuous operation	5 000 min^{-1}	5 000 min^{-1}
Backlash, at no-load	≤ 3 °	≤ 3 °
Bearings on output shaft	sintered bearings	ball bearings
Shaft load, max.:		
– radial (10 mm from mounting face)	≤ 4 N	≤ 60 N
– axial	≤ 4 N	≤ 15 N
Shaft press fit force, max.	≤ 20 N	≤ 20 N
Shaft play:		
– radial (10 mm from mounting face)	≤ 0,08 mm	≤ 0,1 mm
– axial	≤ 0,25 mm	≤ 0,25 mm
Operating temperature range	- 30 ... + 65 °C	- 30 ... + 85 °C

Technical data								
Number of gear stages			**2**	**2**	**3**	**3**	**4**	**4**
Continuous torque		mNm	300	300	750	800	900	1 000
Intermittent torque		mNm	500	600	1 100	1 200	1 400	1 500
Mass without motor, ca.		g	21	21	23	23	25	25
Efficiency, max.		%	81	81	73	73	64	64
Direction of rotation, drive to output			=	=	=	=	=	=
Reduction ratio [1] (rounded)			**13:1**	**16:1**	**40:1**	**50:1** **64:1**	**124:1**	**158:1** **201:1** **256:1**
L2 [mm] = length without motor			32,7	32,7	38,5	38,5	44,3	44,3
L1 [mm] = length with motor	2232S...BX4		66,5	66,5	72,3	72,3	78,1	78,1
	2250S...BX4		84,5	84,5	90,3	90,3	96,1	96,1
	3216W...BXTH		49,5	49,5	55,3	55,3	61,1	61,1
	3216W...BXTR		48,7	48,7	54,5	54,5	60,3	60,3
	2232U...SR		67,4	67,4	73,2	73,2	79,0	79,0
	2237S...CXR		69,7	69,7	75,5	75,5	81,3	81,3
	2342S...CR		74,7	74,7	80,5	80,5	86,3	86,3
	2642W...CR/CXR		74,7	74,7	80,5	80,5	86,3	86,3
	2657W...CR/CXR		89,7	89,7	95,5	95,5	101,3	101,3
	2668W...CR		100,7	100,7	106,5	106,5	112,3	112,3

[1] The reduction ratios are rounded, the exact values are available on request or at www.faulhaber.com.

Note: These gearheads are available only with motors mounted.

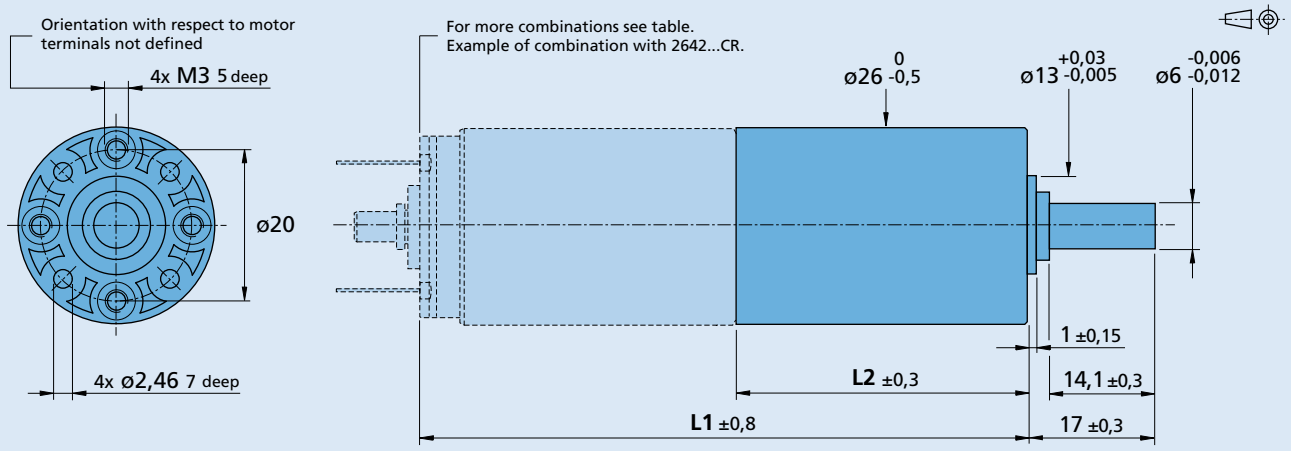

26A, 26AK

For notes on technical data and lifetime performance refer to "Technical Information".

Edition 2022 Feb. 28

Backwards

© DR. FRITZ FAULHABER GMBH & CO. KG
Specifications subject to change without notice.

www.faulhaber.com

Planetary Gearheads

3,5 Nm

For combination with
DC-Micromotors
Brushless DC-Motors
Motion Control Systems

Series 26/1R

	26/1R
Housing material	metal
Geartrain material	steel
Backlash, at no-load	≤ 1 °
Bearings on output shaft	ball bearings, preloaded
Shaft load, max.:	
– radial (10 mm from mounting face)	≤ 150 N
– axial	≤ 100 N
Shaft press fit force, max.	≤ 150 N
Shaft play	
– radial (10 mm from mounting face)	≤ 0,03 mm
– axial	≤ 0,1 mm
Operating temperature range	- 10 ... + 125 °C

Specifications

Number of gear stages		**1**	**2**	**2**	**3**	**3**	**3**	**4**	**5**	**5**
Continuous torque [1]	Nm	0,4	1	1,5	1,8	2,5	3	3,5	3,5	3,5
Intermittent torque	Nm	0,6	1,2	1,8	2,2	3	3,6	4,5	4,5	4,5
Max. continuous input speed [1]	min^{-1}	7 000	7 500	7 500	9 000	9 000	9 000	9 000	9 000	9 000
Max. intermittent input speed	min^{-1}	8 500	8 500	9 000	10 000	10 000	10 000	10 000	10 000	10 000
Mass without motor, ca.	g	93	116	116	139	139	139	162	185	185
Efficiency, max.	%	91	83	83	75	75	75	69	62	62
Direction of rotation, drive to output		=	=	=	=	=	=	=	=	=
Reduction ratio [2] (rounded)		**3,71:1**	**9,7:1 14:1**	**23:1**	**43:1**	**66:1**	**86:1**	**134:1 159:1 246:1**	**415:1 592:1 989:1**	**1 526:1**
L2 [mm] = length without motor		28,4	36,4	36,4	44,4	44,4	44,4	52,4	60,5	60,5
L1 [mm] = length with motor	2342S...CR	70,4	78,4	78,4	86,4	86,4	86,4	94,4	102,5	102,5
	2642W...CR	70,4	78,4	78,4	86,4	86,4	86,4	94,4	102,5	102,5
	2642W...CXR	70,4	78,4	78,4	86,4	86,4	86,4	94,4	102,5	102,5
	2657W...CR	85,4	93,4	93,4	101,4	101,4	101,4	109,4	117,5	117,5
	2657W...CXR	85,4	93,4	93,4	101,4	101,4	101,4	109,4	117,5	117,5
	2668W...CR	96,4	104,4	104,4	112,4	112,4	112,4	120,4	128,5	128,5
	2444S...B	72,4	80,4	80,4	88,4	88,4	88,4	96,4	104,5	104,5
	2264W...BP4	92,4	100,4	100,4	108,4	108,4	108,4	116,4	124,5	124,5
	2214S...BXT H	43,2	51,2	51,2	59,2	59,2	59,2	67,2	75,3	75,3
	2214S...BXT R	42,4	50,4	50,4	58,4	58,4	58,4	66,4	74,5	74,5
	3216W...BXT H	45,2	53,2	53,2	61,2	61,2	61,2	69,2	77,3	77,3
	3216W...BXT R	44,4	52,4	52,4	60,4	60,4	60,4	68,4	76,5	76,5
	AM2224R3...-30	59,3	67,3	67,3	75,3	75,3	75,3	83,3	91,4	91,4

[1] Max. continuous input speed and continuous output torque are both dependent on the reduction ratio and related to the max. output power. They cannot simultaneously be applied at their maximum values for an extended period. For more information, please contact your local sales representative.
[2] The reduction ratios are rounded, the exact values are available on request or at www.faulhaber.com.

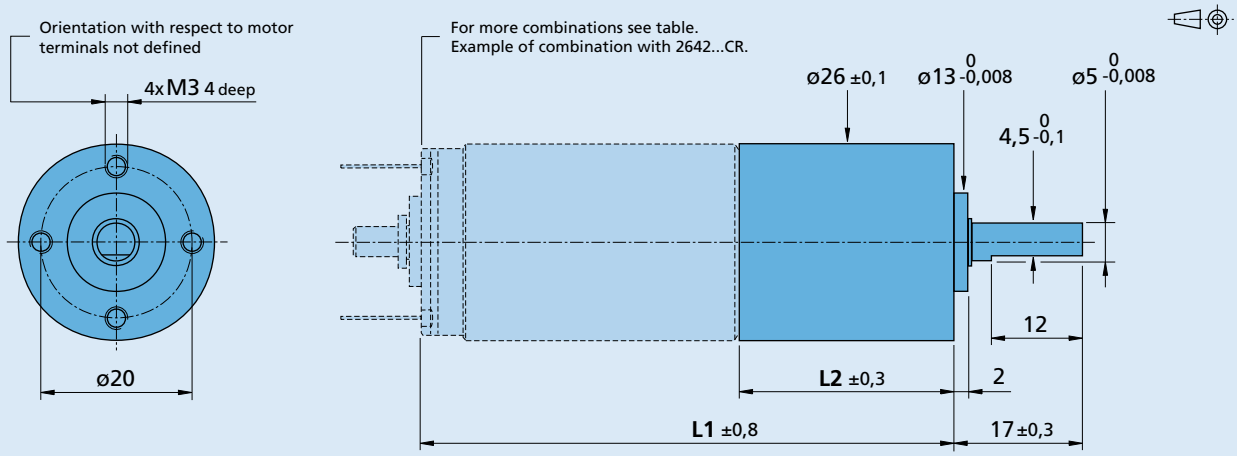

26/1R

© DR. FRITZ FAULHABER GMBH & CO. KG
Specifications subject to change without notice.

Planetary Gearheads

4,5 Nm

For combination with
DC-Micromotors
Brushless DC-Motors

Series 30/1

	30/1
Housing material	metal
Geartrain material [1]	plastic/steel
Recommended max. input speed for:	
– continuous operation	4 000 min^{-1}
Backlash, at no-load	≤ 1 °
Bearings on output shaft	ball bearings
Shaft load, max.:	
– radial (15 mm from mounting face)	≤ 150 N
– axial	≤ 150 N
Shaft press fit force, max.	≤ 200 N
Shaft play	
– radial (15 mm from mounting face)	≤ 0,03 mm
– axial	≤ 0,15 mm
Operating temperature range	- 30 ... + 100 °C

Technical data

Number of gear stages		**1**	**2**	**3**	**3**	**4**	**4**	**5**
Continuous torque	Nm	1,5	0,35	1,2	1,8	3,5	4,5	4,5
Intermittent torque	Nm	3	0,5	1,6	2,4	4,5	6	6
Mass without motor, ca.	g	107	139	171	171	203	203	235
Efficiency, max.	%	88	80	70	70	60	60	55
Direction of rotation, drive to output		=	=	=	=	=	=	=
Reduction ratio [2] (rounded)		**3,71:1**	**14:1**	**43:1**	**66:1**	**134:1**	**159:1** **246:1**	**415:1** **592:1** **989:1** **1 526:1**
L2 [mm] = length without motor [3]		27,1	35,1	43,1	43,1	51,2	51,2	59,2
L1 [mm] = length with motor	2342S...CR	69,1	77,1	85,1	85,1	93,2	93,2	101,2
	2642W...CR/CXR	69,1	77,1	85,1	85,1	93,2	93,2	101,2
	2657W...CR/CXR	84,1	92,1	100,1	100,1	108,2	108,2	116,2
	2668W...CR	95,1	103,1	111,1	111,1	119,2	119,2	127,2
	2444S...B	71,1	79,1	87,1	87,1	95,2	95,2	103,2
	3056K...B	84,5	92,5	100,5	100,5	108,6	108,6	116,6
	3564K...B	92,5	100,5	108,5	108,5	116,6	116,6	124,6

[1] Gearheads with ratios < 14:1 have all steel gears.
[2] The reduction ratios are rounded, the exact values are available on request or at www.faulhaber.com.
[3] L2 + 1,4 mm, in combination with 3056K...B and 3564K...B.

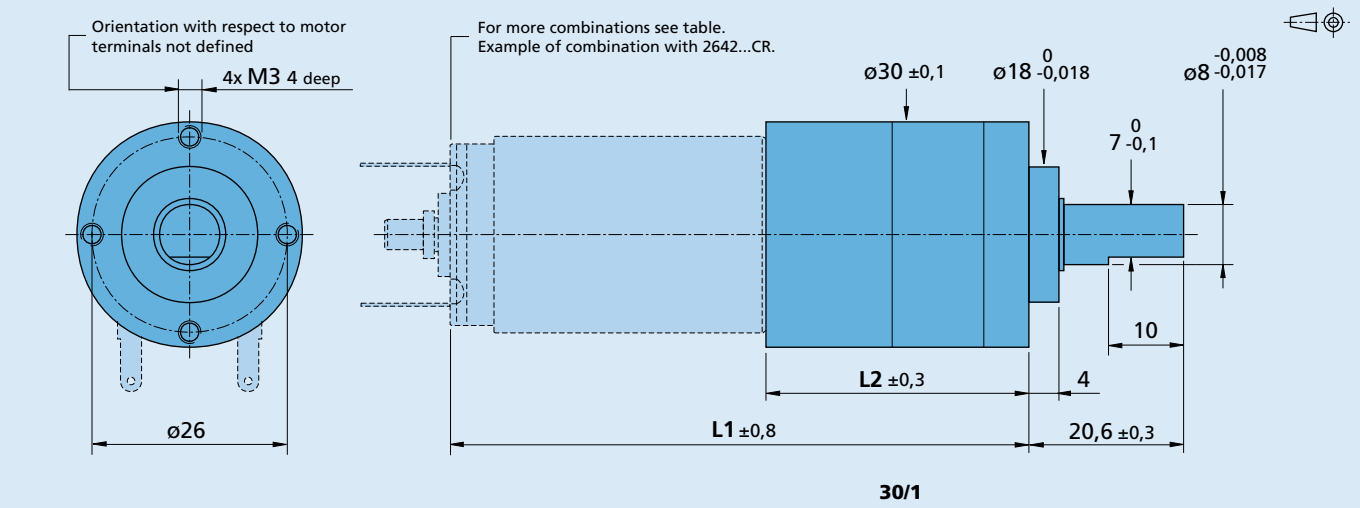

For notes on technical data and lifetime performance refer to "Technical Information".

Backwards

© DR. FRITZ FAULHABER GMBH & CO. KG
Specifications subject to change without notice.

Planetary Gearheads

4,5 Nm

For combination with
DC-Micromotors
Brushless DC-Motors

Series 30/1 S

	30/1 S
Housing material	metal
Geartrain material	steel
Recommended max. input speed for:	
– continuous operation	4 000 min^{-1}
Backlash, at no-load	≤ 1 °
Bearings on output shaft	ball bearings
Shaft load, max.:	
– radial (15 mm from mounting face)	≤ 150 N
– axial	≤ 150 N
Shaft press fit force, max.	≤ 200 N
Shaft play	
– radial (15 mm from mounting face)	≤ 0,03 mm
– axial	≤ 0,15 mm
Operating temperature range	- 30 ... + 100 °C

Technical data					
Number of gear stages		**2**	**3**	**4**	**5**
Continuous torque	Nm	4,5	4,5	4,5	4,5
Intermittent torque	Nm	6	6	6	6
Mass without motor, ca.	g	139	171	203	235
Efficiency, max.	%	80	70	60	55
Direction of rotation, drive to output		=	=	=	=
Reduction ratio [1] (rounded)		**9,7:1** **14:1** **23:1**	**43:1** **66:1** **86:1**	**134:1** **159:1** **246:1**	**415:1** **592:1** **989:1** **1 526:1**
L2 [mm] = length without motor [2]		35,1	43,1	51,2	59,2
L1 [mm] = length with motor	2342S...CR	77,1	85,1	93,2	101,2
	2642W...CR/CXR	77,1	85,1	93,2	101,2
	2657W...CR/CXR	92,1	100,1	108,2	116,2
	2668W...CR	103,1	111,1	119,2	127,2
	2444S...B	79,1	87,1	95,2	103,2
	3056K...B	92,5	100,5	108,6	116,6
	3564K...B	100,5	108,5	116,6	124,6

[1] The reduction ratios are rounded, the exact values are available on request or at www.faulhaber.com.
[2] L2 + 1,4 mm, in combination with 3056K...B and 3564K...B.

Note: The gearheads as S-type have all steel gears and heavy duty lubricant for extended lifetime performance.

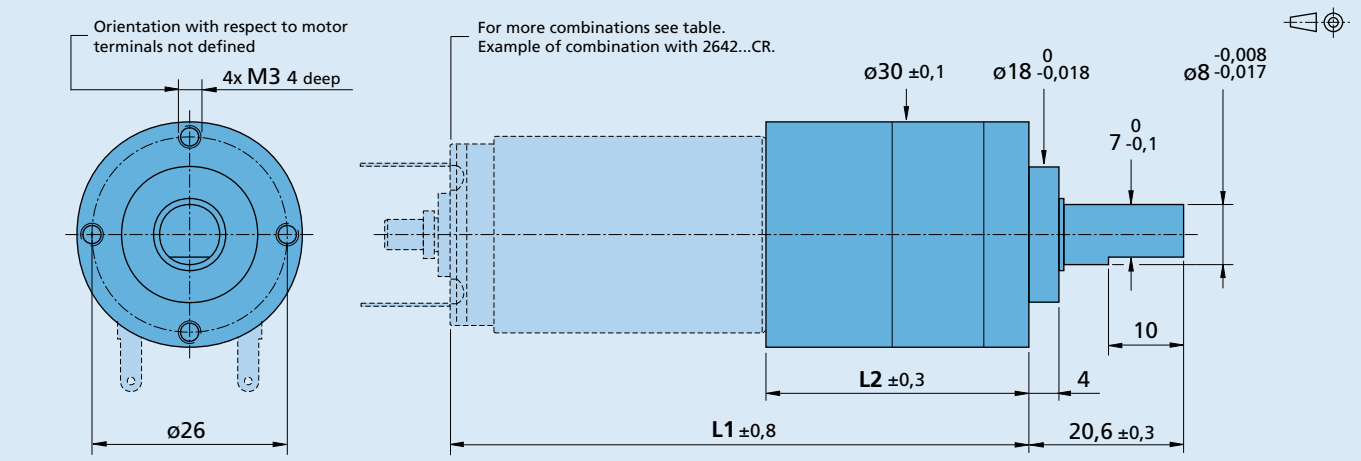

30/1 S

For notes on technical data and lifetime performance refer to "Technical Information".

Edition 2020 Feb. 18

Backwards

© DR. FRITZ FAULHABER GMBH & CO. KG
Specifications subject to change without notice.

www.faulhaber.com

Planetary Gearheads

7 Nm

For combination with
DC-Micromotors
Brushless DC-Motors
Motion Control Systems

Series 32/3R

	32/3R
Housing material	metal
Geartrain material	steel
Backlash, at no-load	≤ 1 °
Bearings on output shaft	ball bearings, preloaded
Shaft load, max.:	
– radial (10 mm from mounting face)	≤ 200 N
– axial	≤ 200 N
Shaft press fit force, max.	≤ 250 N
Shaft play	
– radial (10 mm from mounting face)	≤ 0,03 mm
– axial	≤ 0,15 mm
Operating temperature range	- 10 ... + 125 °C

Specifications

Number of gear stages		**1**	**2**	**2**	**3**	**3**	**3**	**4**	**5**	**5**
Continuous torque [1]	Nm	1	1,6	3	3,5	4	5	7	7	7
Intermittent torque	Nm	1,2	1,9	3,6	4,2	4,8	6	9,5	9,5	9,5
Max. continuous input speed [1]	min^{-1}	6 000	7 000	7 000	8 000	8 000	8 000	8 000	8 000	8 000
Max. intermittent input speed	min^{-1}	7 000	8 000	8 000	9 000	9 000	9 000	9 000	9 000	9 000
Mass without motor, ca.	g	160	195	195	230	230	230	265	300	300
Efficiency, max.	%	91	83	83	75	75	75	69	62	62
Direction of rotation, drive to output		=	=	=	=	=	=	=	=	=
Reduction ratio [2] (rounded)		**3,71:1**	**14:1**	**23:1**	**43:1**	**66:1**	**86:1**	**134:1 159:1 246:1**	**415:1 592:1 989:1**	**1 526:1**
L2 [mm] = length without motor		33,9	41,6	41,6	49,4	49,4	49,4	57,2	65,0	65,0
L1 [mm] = length with motor	2668W...CR	101,9	109,6	109,6	117,4	117,4	117,4	125,2	133,0	133,0
	3242G...CR	75,9	83,6	83,6	91,4	91,4	91,4	99,2	107,0	107,0
	3257G...CR	90,9	98,6	98,6	106,4	106,4	106,4	114,2	122,0	122,0
	3272G...CR	105,9	113,6	113,6	121,4	121,4	121,4	129,2	137,0	137,0
	2264W...BP4	97,9	105,6	105,6	113,4	113,4	113,4	121,2	129,0	129,0
	3242G...BX4	78,1	85,8	85,8	93,6	93,6	93,6	101,4	109,2	109,2
	3268G...BX4	104,1	111,8	111,8	119,6	119,6	119,6	127,4	135,2	135,2
	3274G...BP4	107,9	115,6	115,6	123,4	123,4	123,4	131,2	139,0	139,0
	3564K...B	97,9	105,6	105,6	113,4	113,4	113,4	121,2	129,0	129,0
	3216W...BXT H	50,7	58,4	58,4	66,2	66,2	66,2	74,0	81,8	81,8
	3216W...BXT R	49,9	57,6	57,6	65,4	65,4	65,4	73,2	81,0	81,0

[1] Max. continuous input speed and continuous output torque are both dependent on the reduction ratio and related to the max. output power. They cannot simultaneously be applied at their maximum values for an extended period. For more information, please contact your local sales representative.
[2] The reduction ratios are rounded, the exact values are available on request or at www.faulhaber.com.

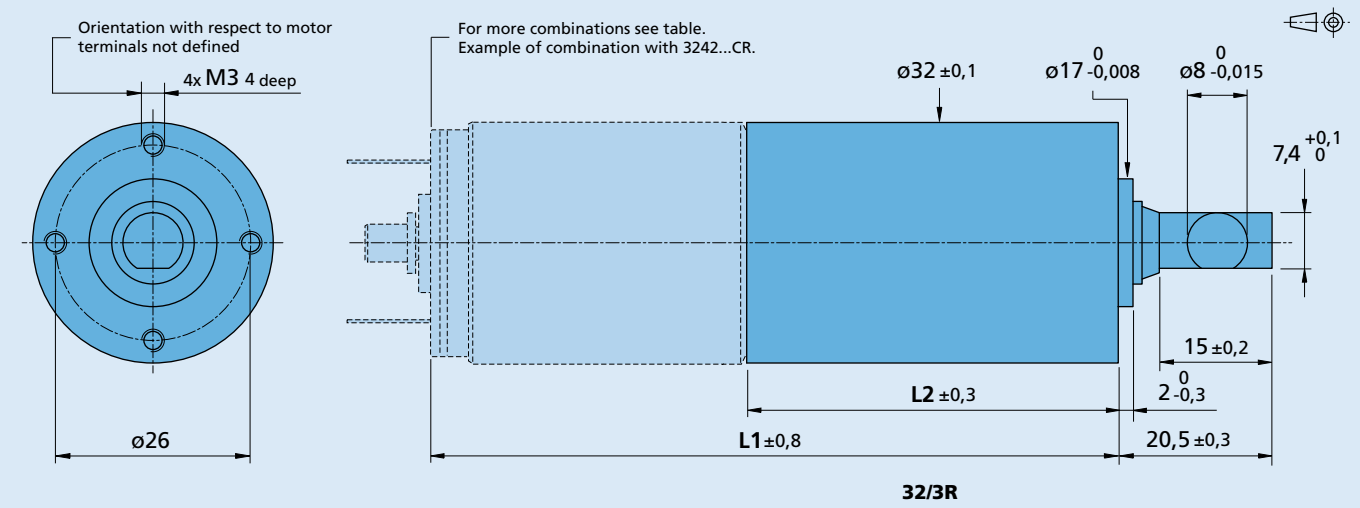

© DR. FRITZ FAULHABER GMBH & CO. KG
Specifications subject to change without notice.

Planetary Gearheads

10 Nm

For combination with
DC-Micromotors
Brushless DC-Motors

Series 38/1

	38/1
Housing material	metal
Geartrain material [1]	plastic/steel
Recommended max. input speed for:	
– continuous operation	4 000 min^{-1}
Backlash, at no-load	≤ 1 °
Bearings on output shaft	ball bearings, preloaded
Shaft load, max.:	
– radial (10 mm from mounting face)	≤ 300 N
– axial	≤ 300 N
Shaft press fit force, max.	≤ 350 N
Shaft play	
– radial (10 mm from mounting face)	≤ 0,03 mm
– axial	≤ 0,2 mm
Operating temperature range	- 20 ... + 125 °C

Technical data

Number of gear stages		**1**	**2**	**3**	**3**	**4**	**4**	**4**	**5**
Continuous torque	Nm	6	0,4	1,4	2,2	4,5	5,3	8,2	10
Intermittent torque	Nm	8	0,6	1,9	2,9	6	7	11	15
Mass without motor, ca.	g	166	215	268	268	320	320	320	375
Efficiency, max.	%	88	80	70	70	60	60	60	55
Direction of rotation, drive to output		=	=	=	=	=	=	=	=
Reduction ratio [2] (rounded)		**3,71:1**	**14:1**	**43:1**	**66:1**	**134:1**	**159:1**	**246:1**	**415:1** **592:1** **989:1** **1 526:1**
L2 [mm] = length without motor [3]		32,3	40,1	47,9	47,9	55,7	55,7	55,7	63,5
L1 [mm] = length with motor	3242G...CR	73,5	81,3	89,1	89,1	96,9	96,9	96,9	104,7
	3257G...CR	88,5	96,3	104,1	104,1	111,9	111,9	111,9	119,7
	3272G...CR	103,5	111,3	119,1	119,1	126,9	126,9	126,9	134,7
	3863A...CR	91,3	99,1	106,9	106,9	114,7	114,7	114,7	122,5
	3890A...CR	117,3	125,1	132,9	132,9	140,7	140,7	140,7	148,5
	3056K...B	88,3	96,1	103,9	103,9	111,7	111,7	111,7	119,5
	3242G...BX4	75,7	83,5	91,3	91,3	99,1	99,1	99,1	106,9
	3268G...BX4	101,7	109,5	117,3	117,3	125,1	125,1	125,1	132,9
	3274G...BP4	105,5	113,3	121,1	121,1	128,9	128,9	128,9	136,7
	3564K...B	96,3	104,1	111,9	111,9	119,7	119,7	119,7	127,5
	4221G...BXTH	53,5	61,3	69,1	69,1	76,9	76,9	76,9	84,7
	4221G...BXTR	52,7	60,5	68,3	68,3	76,1	76,1	76,1	83,9

[1] Gearheads with ratios < 14:1 have all steel gears.
[2] The reduction ratios are rounded, the exact values are available on request or at www.faulhaber.com.
[3] L2 - 0,8 mm, in combination with 3242G...CR, 3257G...CR, 3272G...CR, 3242G...BX4, 3268G...BX4, 3274G...BP4 and 4221G...BXT R/H.
L2 - 5 mm, in combination with 3863A...CR and 3890A...CR.

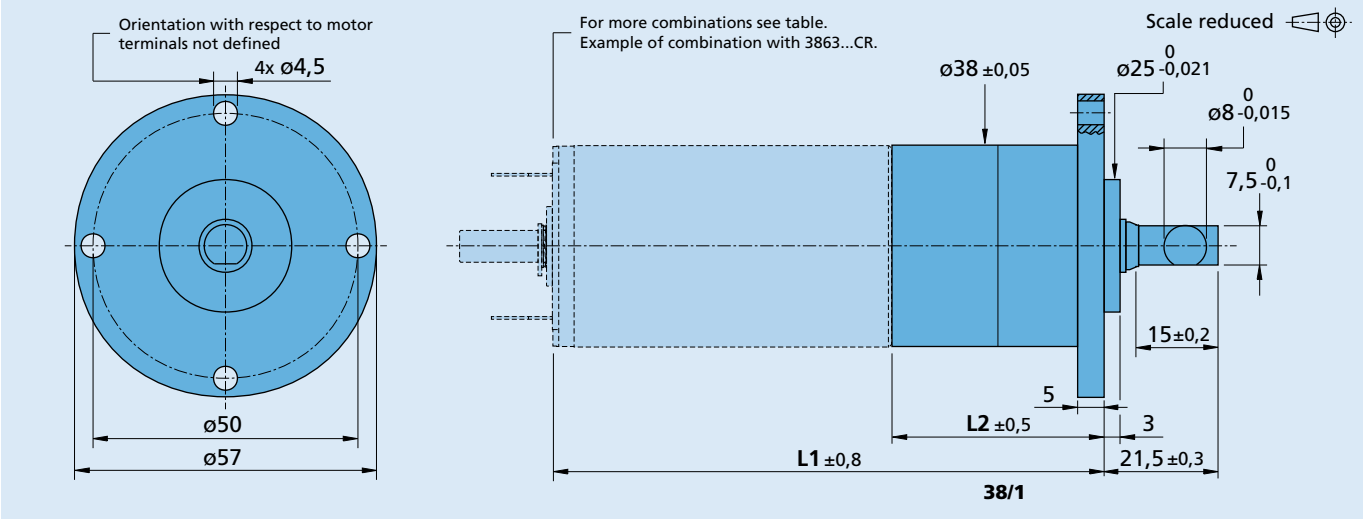

For notes on technical data and lifetime performance refer to "Technical Information".

Edition 2024 Feb. 14

Backwards

© DR. FRITZ FAULHABER GMBH & CO. KG
Specifications subject to change without notice.

www.faulhaber.com

Planetary Gearheads

10 Nm

For combination with
DC-Micromotors
Brushless DC-Motors

Series 38/1 S

	38/1 S
Housing material	metal
Geartrain material	steel
Recommended max. input speed for:	
– continuous operation	4 000 min^{-1}
Backlash, at no-load	≤ 1 °
Bearings on output shaft	ball bearings, preloaded
Shaft load, max.:	
– radial (10 mm from mounting face)	≤ 300 N
– axial	≤ 300 N
Shaft press fit force, max.	≤ 350 N
Shaft play	
– radial (10 mm from mounting face)	≤ 0,03 mm
– axial	≤ 0,2 mm
Operating temperature range	- 20 ... + 125 °C

Technical data

Number of gear stages		**2**	**3**	**4**	**5**
Continuous torque	Nm	10	10	10	10
Intermittent torque	Nm	15	15	15	15
Mass without motor, ca.	g	215	268	320	375
Efficiency, max.	%	80	70	60	55
Direction of rotation, drive to output		=	=	=	=
Reduction ratio [1] (rounded)		**14:1**	**43:1** **66:1**	**134:1** **159:1** **246:1**	**415:1** **592:1** **989:1** **1 526:1**
L2 [mm] = length without motor [2]		40,1	47,9	55,7	63,5
L1 [mm] = length with motor	3242G...CR	81,3	89,1	96,9	104,7
	3257G...CR	96,3	104,1	111,9	119,7
	3272G...CR	111,3	119,1	126,9	134,7
	3863A...CR	99,1	106,9	114,7	122,5
	3890A...CR	125,1	132,9	140,7	148,5
	3056K...B	96,1	103,9	111,7	119,5
	3242G...BX4	83,5	91,3	99,1	106,9
	3268G...BX4	109,5	117,3	125,1	132,9
	3274G...BP4	113,3	121,1	128,9	136,7
	3564K...B	104,1	111,9	119,7	127,5
	4221G...BXTH	61,3	69,1	76,9	84,7
	4221G...BXTR	60,5	68,3	76,1	83,9

[1] The reduction ratios are rounded, the exact values are available on request or at www.faulhaber.com.
[2] L2 - 0,8 mm, in combination with 3242G...CR, 3257G...CR, 3272G...CR, 3242G...BX4, 3268G...BX4, 3274G...BP4 and 4221G...BXT R/H.
L2 - 5 mm, in combination with 3863A...CR and 3890A...CR.

Note: The gearheads as S-type have all steel gears and heavy duty lubricant for extended lifetime performance.

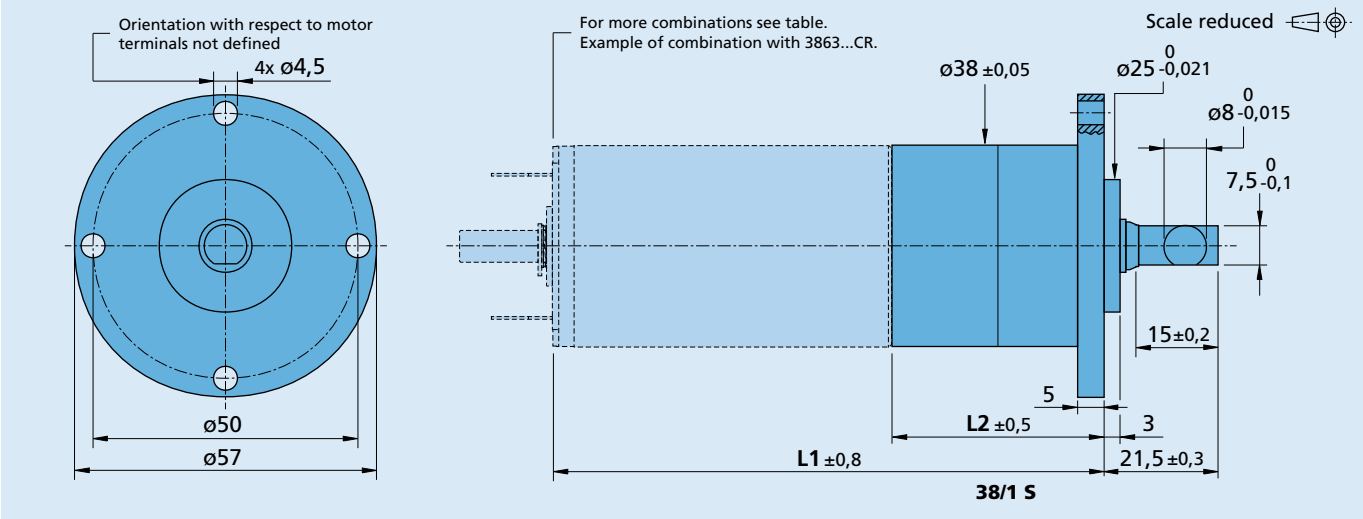

For notes on technical data and lifetime performance refer to "Technical Information".

Edition 2024 Feb. 14

Backwards

© DR. FRITZ FAULHABER GMBH & CO. KG
Specifications subject to change without notice.

www.faulhaber.com

Planetary Gearheads

10 Nm

For combination with
DC-Micromotors
Brushless DC-Motors

Series 38/2

	38/2
Housing material	metal
Geartrain material [1]	plastic/steel
Recommended max. input speed for:	
– continuous operation	4 000 min^{-1}
Backlash, at no-load	≤ 1 °
Bearings on output shaft	ball bearings, preloaded
Shaft load, max.:	
– radial (10 mm from mounting face)	≤ 300 N
– axial	≤ 300 N
Shaft press fit force, max.	≤ 350 N
Shaft play	
– radial (10 mm from mounting face)	≤ 0,03 mm
– axial	≤ 0,2 mm
Operating temperature range	- 20 ... + 125 °C

Technical data

Number of gear stages		**1**	**2**	**3**	**3**	**4**	**4**	**4**	**5**
Continuous torque	Nm	6	0,4	1,4	2,2	4,5	5,3	8,2	10
Intermittent torque	Nm	8	0,6	1,9	2,9	6	7	11	15
Mass without motor, ca.	g	145	195	245	245	296	296	296	348
Efficiency, max.	%	88	80	70	70	60	60	60	55
Direction of rotation, drive to output		=	=	=	=	=	=	=	=
Reduction ratio [2] (rounded)		**3,71:1**	**14:1**	**43:1**	**66:1**	**134:1**	**159:1**	**246:1**	**415:1** **592:1** **989:1** **1 526:1**
L2 [mm] = length without motor [3]		32,3	40,1	47,9	47,9	55,7	55,7	55,7	63,5
L1 [mm] = length with motor	3242G...CR	73,5	81,3	89,1	89,1	96,9	96,9	96,9	104,7
	3257G...CR	88,5	96,3	104,1	104,1	111,9	111,9	111,9	119,7
	3272G...CR	103,5	111,3	119,1	119,1	126,9	126,9	126,9	134,7
	3863A...CR	91,3	99,1	106,9	106,9	114,7	114,7	114,7	122,5
	3890A...CR	117,3	125,1	132,9	132,9	140,7	140,7	140,7	148,5
	3056K...B	88,3	96,1	103,9	103,9	111,7	111,7	111,7	119,5
	3242G...BX4	75,7	83,5	91,3	91,3	99,1	99,1	99,1	106,9
	3268G...BX4	101,7	109,5	117,3	117,3	125,1	125,1	125,1	132,9
	3274G...BP4	105,5	113,3	121,1	121,1	128,9	128,9	128,9	136,7
	3564K...B	96,3	104,1	111,9	111,9	119,7	119,7	119,7	127,5
	4221G...BXTH	53,5	61,3	69,1	69,1	76,9	76,9	76,9	84,7
	4221G...BXTR	52,7	60,5	68,3	68,3	76,1	76,1	76,1	83,9

[1] Gearheads with ratios < 14:1 have all steel gears.
[2] The reduction ratios are rounded, the exact values are available on request or at www.faulhaber.com.
[3] L2 - 0,8 mm, in combination with 3242G...CR, 3257G...CR, 3272G...CR, 3242G...BX4, 3268G...BX4, 3274G...BP4 and 4221G...BXT R/H.
L2 - 5 mm, in combination with 3863A...CR and 3890A...CR.

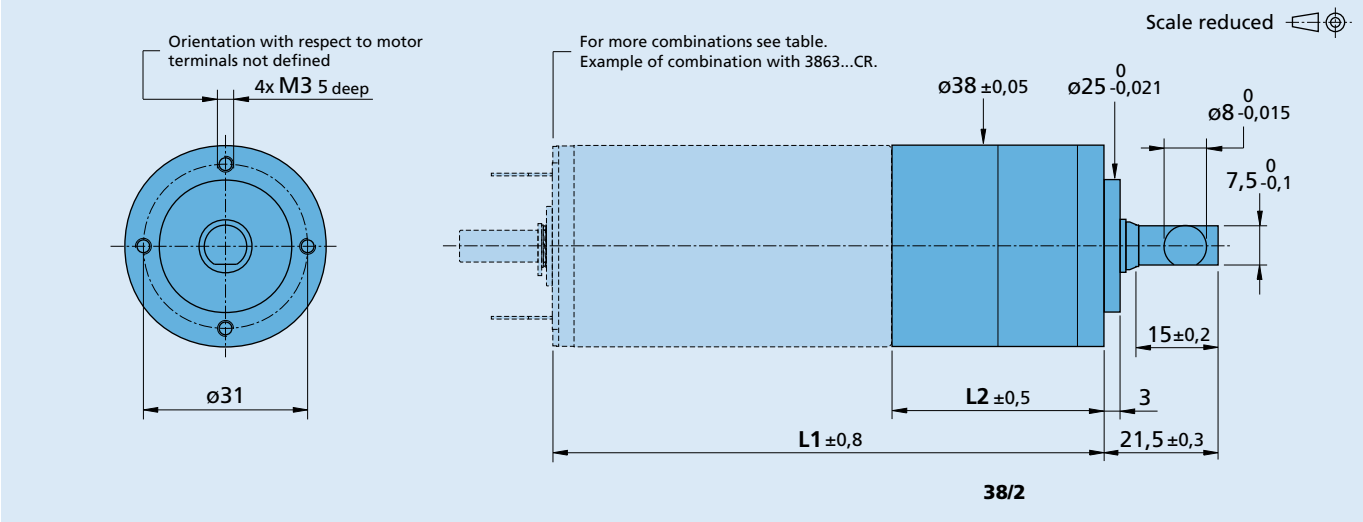

For notes on technical data and lifetime performance refer to "Technical Information".

Edition 2024 Feb. 14

Backwards

© DR. FRITZ FAULHABER GMBH & CO. KG
Specifications subject to change without notice.

www.faulhaber.com

Planetary Gearheads

10 Nm

For combination with
DC-Micromotors
Brushless DC-Motors

Series 38/2 S

	38/2 S
Housing material	metal
Geartrain material	steel
Recommended max. input speed for:	
– continuous operation	4 000 min^{-1}
Backlash, at no-load	≤ 1 °
Bearings on output shaft	ball bearings, preloaded
Shaft load, max.:	
– radial (10 mm from mounting face)	≤ 300 N
– axial	≤ 300 N
Shaft press fit force, max.	≤ 350 N
Shaft play	
– radial (10 mm from mounting face)	≤ 0,03 mm
– axial	≤ 0,2 mm
Operating temperature range	- 20 ... + 125 °C

Technical data

Number of gear stages		**2**	**3**	**4**	**5**
Continuous torque	Nm	10	10	10	10
Intermittent torque	Nm	15	15	15	15
Mass without motor, ca.	g	195	245	296	348
Efficiency, max.	%	80	70	60	55
Direction of rotation, drive to output		=	=	=	=
Reduction ratio [1] (rounded)		**14:1**	**43:1** **66:1**	**134:1** **159:1** **246:1**	**415:1** **592:1** **989:1** **1 526:1**
L2 [mm] = length without motor [2]		40,1	47,9	55,7	63,5
L1 [mm] = length with motor	3242G...CR	81,3	89,1	96,9	104,7
	3257G...CR	96,3	104,1	111,9	119,7
	3272G...CR	111,3	119,1	126,9	134,7
	3863A...CR	99,1	106,9	114,7	122,5
	3890A...CR	125,1	132,9	140,7	148,5
	3056K...B	96,1	103,9	111,7	119,5
	3242G...BX4	83,5	91,3	99,1	106,9
	3268G...BX4	109,5	117,3	125,1	132,9
	3274G...BP4	113,3	121,1	128,9	136,7
	3564K...B	104,1	111,9	119,7	127,5
	4221G...BXTH	61,3	69,1	76,9	84,7
	4221G...BXTR	60,5	68,3	76,1	83,9

[1] The reduction ratios are rounded, the exact values are available on request or at www.faulhaber.com.
[2] L2 - 0,8 mm, in combination with 3242G...CR, 3257G...CR, 3272G...CR, 3242G...BX4, 3268G...BX4, 3274G...BP4 and 4221G...BXT R/H.
L2 - 5 mm, in combination with 3863A...CR and 3890A...CR.

Note: The gearheads as S-type have all steel gears and heavy duty lubricant for extended lifetime performance.

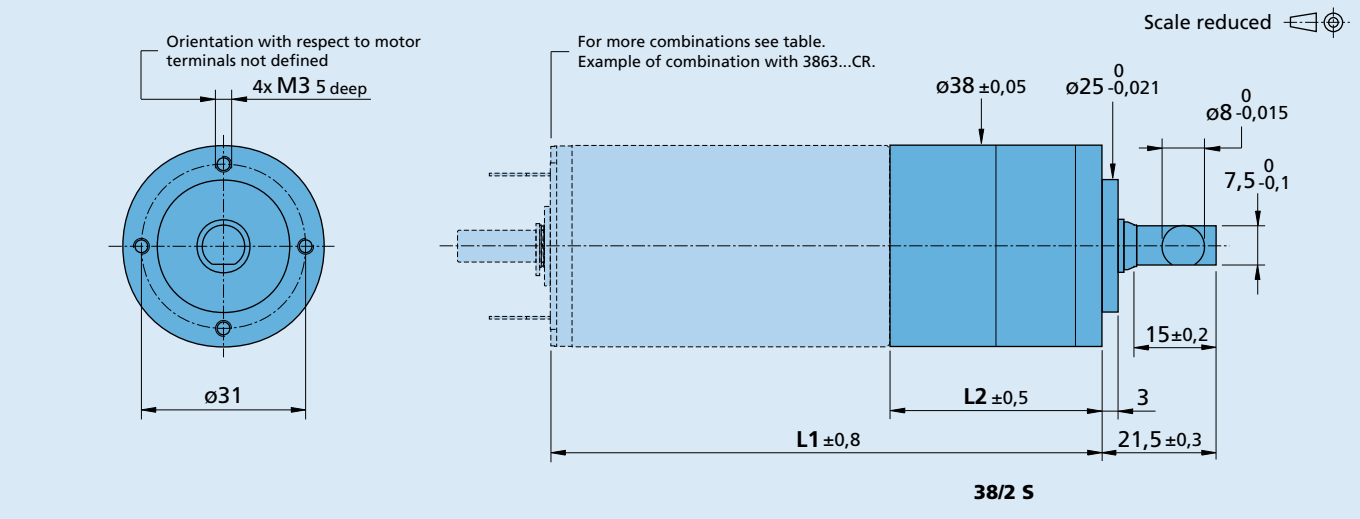

© DR. FRITZ FAULHABER GMBH & CO. KG
Specifications subject to change without notice.
www.faulhaber.com

Planetary Gearheads

16 Nm

For combination with
DC-Micromotors
Brushless DC-Motors

Series 44/1

	44/1
Housing material	metal
Geartrain material	metal
Recommended max. input speed for:	
– continuous operation	3 500 min^{-1}
Backlash, at no-load	≤ 1 °
Bearings on output shaft	ball bearings, preloaded
Shaft load, max.:	
– radial (12 mm from mounting face)	≤ 400 N
– axial	≤ 350 N
Shaft press fit force, max.	≤ 500 N
Shaft play	
– radial (12 mm from mounting face)	≤ 0,03 mm
– axial	= 0 mm
Operating temperature range	- 30 ... + 125 °C

Technical data						
Number of gear stages		**1**	**2**	**3**	**4**	**5**
Continuous torque	Nm	16	16	16	16	16
Intermittent torque	Nm	20	20	20	20	20
Mass without motor, ca.	g	480	600	720	840	960
Efficiency, max.	%	90	80	70	65	60
Direction of rotation, drive to output		=	=	=	=	=
Reduction ratio [1] (rounded)		**4,8:1**	**23:1**	**111:1**	**531:1**	**2 548:1**
L2 [mm] = length without motor		62,2	77,8	93,2	108,6	124,0
L1 [mm] = length with motor	3863H...CR	126,2	141,8	157,2	172,6	188,0
	3890H...CR	152,2	167,8	183,2	198,6	214,0
	4490H...B/BS	152,2	167,8	183,2	198,6	214,0

[1] The reduction ratios are rounded, the exact values are available on request or at www.faulhaber.com.

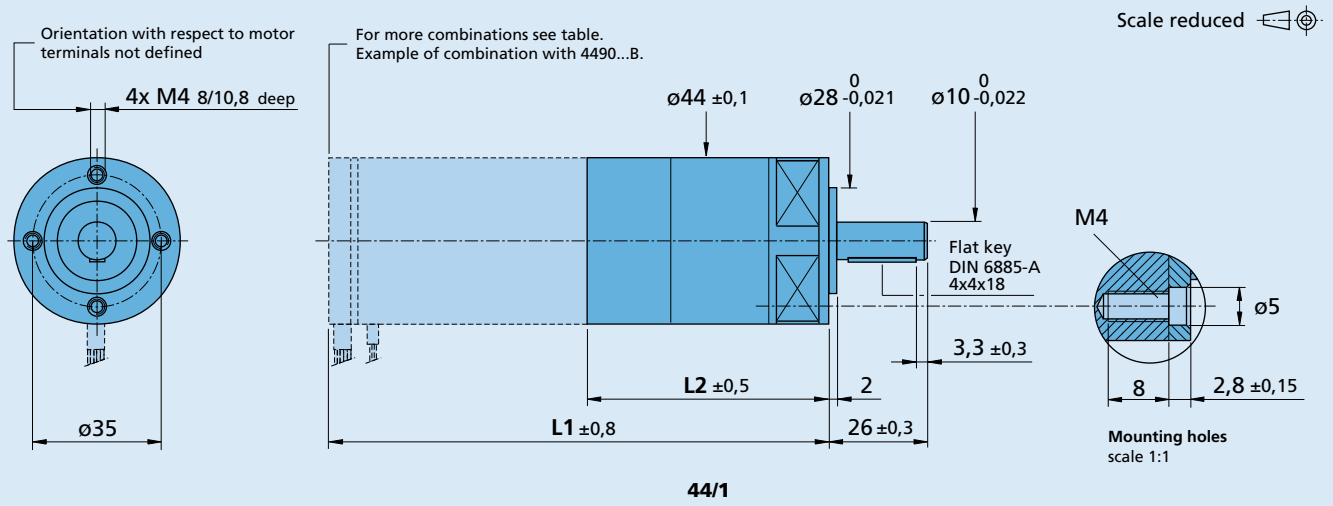

© DR. FRITZ FAULHABER GMBH & CO. KG
Specifications subject to change without notice.

FAULHABER GPT

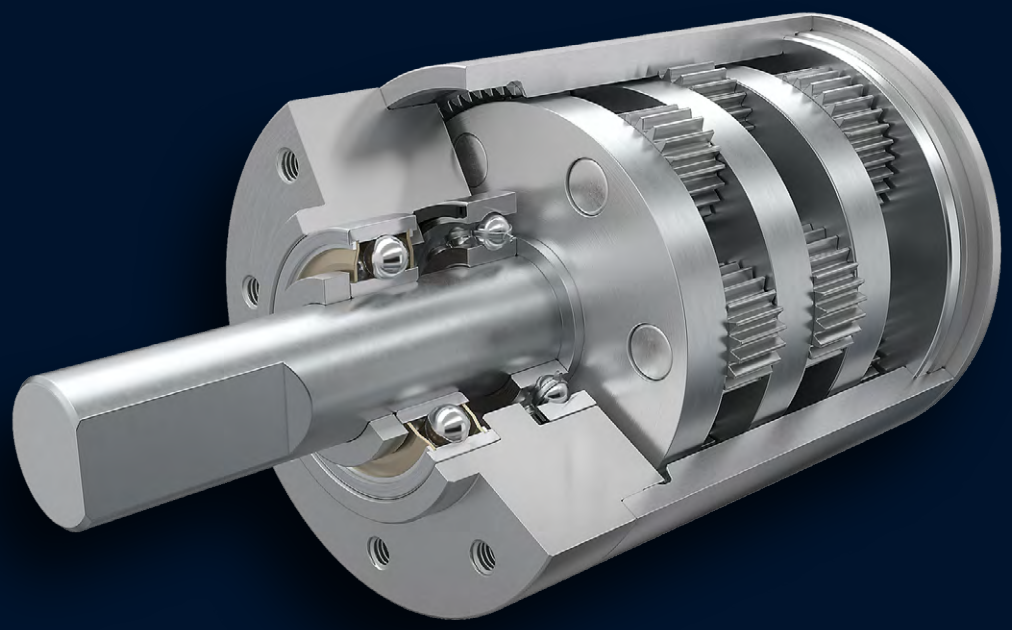

FAULHABER GPT

22GPT	Planetary Gearheads	1.8 Nm
32GPT	Planetary Gearheads	8 Nm
42GPT	Planetary Gearheads	18 Nm

Backwards

Planetary Gearheads

High Torque

1,8 Nm

15 000 min-1

Series 22GPT

Values at 22°C							
Number of gear stages		1	2	2	3	4	4
Reduction ratio [1] (rounded)		3:1 3,6:1 4,5:1 6,6:1	9:1	11:1 14:1 16:1 20:1 24:1 30:1 44:1	41:1 49:1 59:1 72:1 89:1 108:1 131:1 158:1 196:1	178:1 215:1 267:1 323:1 401:1 474:1 588:1 862:1	711:1 1 042:1 1 294:1
Continuous torque, max.	Nm	0,45	0,8	0,8	1,3	1,8	1,4
Intermittent torque, max.	Nm	0,6	1,1	1,1	1,8	2,5	2
Peak torque	Nm	1	2,5	2,5	3,5	4,5	4
Continuous input speed, max.	min-1	9 000	10 000	12 000	15 000	15 000	15 000
Intermittent input speed, max.	min-1	11 000	12 000	15 000	20 000	20 000	20 000
Continuous output power, max.	W	21	12	12	8	7	7
Intermittent output power, max.	W	30	18	18	12	10	10
Efficiency, max.	%	92	84	82	78	65	65
Input inertia with pinion, max.	gmm²	75	78	50	34	14	13
Torsional stiffness, typical	Nm/°	6	11	11	11	11	11
Backlash, at no-load, typical	°	0,8	0,8	0,8	0,8	0,8	0,8
Shaft load, max.:							
– radial (10 mm from mounting face)	N	65	90	90	120	150	150
– axial	N	60	85	85	110	140	140
Shaft press fit force, max.	N	150	150	150	150	150	150
Shaft play:							
– radial (10 mm from mounting face)	mm	≤ 0,05	≤ 0,05	≤ 0,05	≤ 0,05	≤ 0,05	≤ 0,05
– axial	mm	= 0	= 0	= 0	= 0	= 0	= 0
Length without motor L2	mm	18,1	24,5	24,5	30,8	37,2	37,2
Mass without motor and flange	g	44	58	58	72	86	86
Operating temperature range	°C	-30 … +120					
Direction of rotation, drive to output		=					
Housing material		stainless steel					
Geartrain material		stainless steel					
Bearings on output shaft		ball bearings, preloaded					

[1] The reduction ratios are rounded, the exact values are available on request or at www.faulhaber.com.

Note:

The display shows the range of possible operation points of the drives at a given ambient temperature of 22°C.

The diagram indicates the recommended output speed in relation to the available torque at the output shaft.

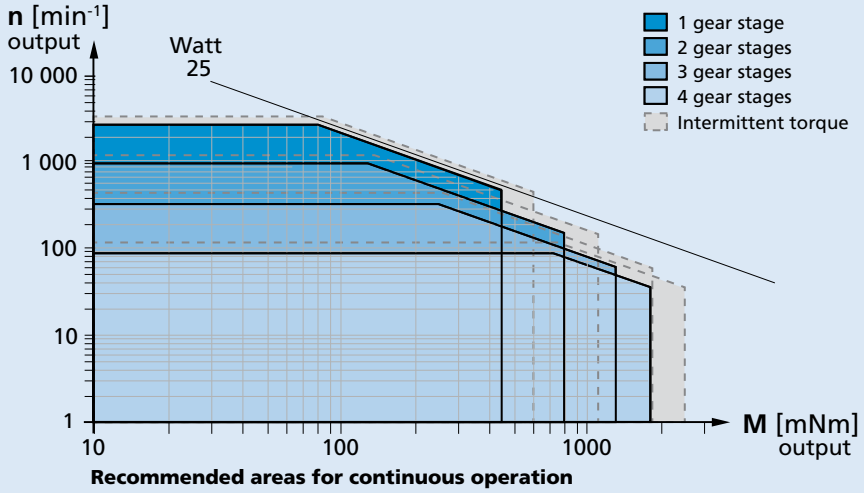

© DR. FRITZ FAULHABER GMBH & CO. KG
Specifications subject to change without notice.

Dimensional drawing

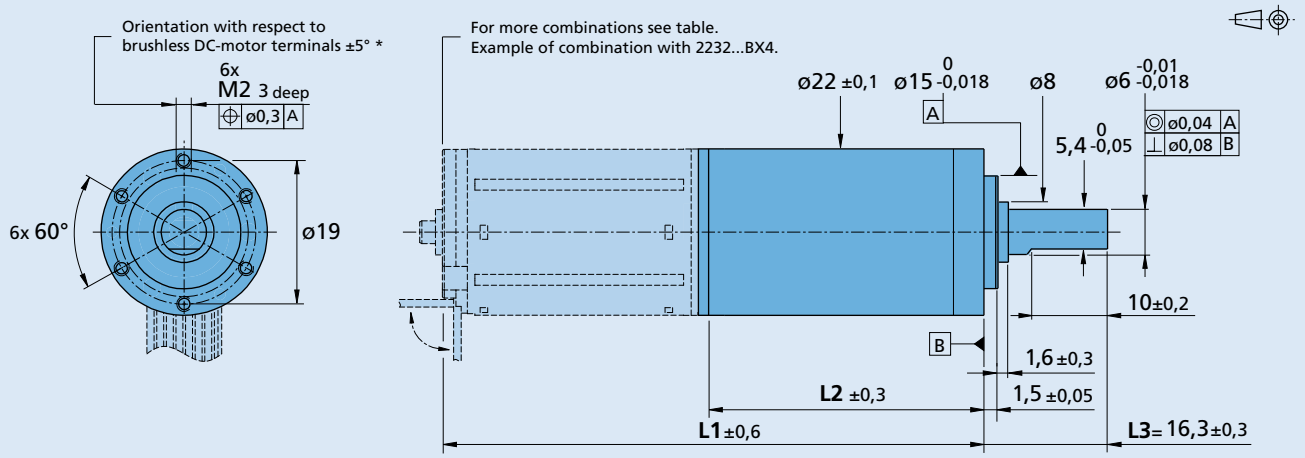

Options

Example product designation: **22GPT 89:1 KS6KL1**

Option	Type	Description
KS1	Output shaft	Round plain shaft, **L3**= 16,3 mm
KS2	Output shaft	Longer round plain shaft, **L3**= 27 mm
KS3	Output shaft	Shaft with double flat shape of 12 mm length on opposite sides, **L3**= 21 mm
KS4	Output shaft	Shaft with DIN 6885-A keyway and mating key with dimensions 2x2x12 mm, **L3**= 21 mm
KS5	Output shaft	Shaft with 12 mm single flat shape, **L3**= 21 mm
KS6	Output shaft	Shaft with 12 mm single flat shape and 2 mm cross bore at 6 mm of shaft end, **L3**= 21 mm
KS7	Output shaft	Shaft with 10 mm single flat shape and M2.5 axial threaded hole, **L3**= 16,3 mm
KS8	Output shaft	Shaft with fork shape of 2 mm width opening, **L3**= 16,3 mm
KS9	Output shaft	Shaft with KS4 option and M2.5 axial threaded hole, **L3**= 21 mm
KR1	Output shaft/flange	Shaft diameter 4 mm with flat shape 8 mm length and 3x M3 threads on flange, **L3**= 13 mm, **L1/L2+** 0,4 mm (compatible with 22F)
KP1	Ingress Protection	Gearhead with IP54 ingress protection rating (to be combined with specific protected motor)
KL1	Ambient conditions	Low temperature range of -55°C … +100°C
KL2	Ambient conditions	Vacuum down to 10^{-5} Pa @ 22°C
KL3	Ambient conditions	Temperature range of -55°C … +150°C and vacuum down to 10^{-9} Pa @ 60°C
KC1	Cable orientation	Motor cable/wires or terminals oriented at 15° CCW vs gearhead front threads
KC2	Cable orientation	Motor cable/wires or terminals oriented at 30° CCW vs gearhead front threads
KC3	Cable orientation	Motor cable/wires or terminals oriented at 45° CCW vs gearhead front threads

Note: Specified values may differ from the standard values depending on the option. Please consult your sales representative for further information.

Product combination

Number of gear stages		1	2	3	4
L2 [mm] = length without motor		18,1	24,5	30,8	37,2
L1 [mm] = length with motor	2224U...SR	45,1	51,4	57,8	64,1
	2232U...SR	53,1	59,4	65,8	72,1
	2237U...CXR	57,9	64,2	70,6	76,9
	2342X...CR	61,8	68,2	74,5	80,9
	2642X...CR/CXR	65,2	71,6	77,9	84,3
	2657X...CR/CXR	80,2	86,6	92,9	99,3
	2668X...CR	91,2	97,6	103,9	110,3
	2232X...BX4	53,6	60,0	66,3	72,7
	2250X...BX4	71,6	78,0	84,3	90,7
	2264X...BP4	87,2	93,6	99,9	106,3
	2214X...BXTH	34,6	41,0	47,3	53,7
	2214X...BXTR	33,8	40,2	46,5	52,9
	3216X...BXTH	36,6	43,0	49,3	55,7
	3216X...BXTR	35,8	42,2	48,5	54,9
	2036U...B	56,8	63,2	69,5	75,9
	2057X...B	76,8	83,2	89,5	95,9
	2444X...B	63,8	70,2	76,5	82,9
	AM2224...10	48,6	55,0	61,3	67,7

© DR. FRITZ FAULHABER GMBH & CO. KG
Specifications subject to change without notice.

Planetary Gearheads

High Torque

8 Nm

11 000 min-1

Series 32GPT

Values at 22°C								
Number of gear stages		**1**	**1**	**2**	**2**	**3**	**4**	**4**
Reduction ratio [1] (rounded)		**3:1**	**3,6:1** **4,5:1** **6,6:1**	**9:1** **11:1**	**14:1** **16:1** **20:1** **24:1** **30:1** **44:1**	**41:1** **49:1** **59:1** **72:1** **89:1** **108:1** **131:1** **158:1** **196:1**	**178:1** **215:1** **267:1** **323:1** **401:1** **474:1** **588:1** **862:1**	**711:1** **1 042:1** **1 294:1**
Continuous torque, max.	Nm	1	1	3	3	5	8	6
Intermittent torque, max.	Nm	1,3	1,3	4	4	7	10	7,2
Peak torque	Nm	2	2	6,5	6,5	10	13	10
Continuous input speed, max.	min-1	6 500	8 000	6 500	10 000	11 000	11 000	11 000
Intermittent input speed, max.	min-1	7 500	9 500	7 500	12 500	14 000	14 000	14 000
Continuous output power, max.	W	40	40	21	21	14	12	12
Intermittent output power, max.	W	55	55	30	30	20	15	15
Efficiency, max.	%	93	93	89	89	80	65	65
Input inertia with pinion, max.	gmm²	410	274	434	195	196	83	75
Torsional stiffness, typical	Nm/°	12	12	16	16	16	16	16
Backlash, at no-load, typical	°	0,6	0,6	0,6	0,6	0,6	0,6	0,6
Shaft load, max.:								
– radial (10 mm from mounting face)	N	140	140	180	180	220	300	300
– axial	N	120	120	150	150	180	250	250
Shaft press fit force, max.	N	250	250	250	250	250	250	250
Shaft play:								
– radial (10 mm from mounting face)	mm	≤ 0,07	≤ 0,07	≤ 0,07	≤ 0,07	≤ 0,07	≤ 0,07	≤ 0,07
– axial	mm	= 0	= 0	= 0	= 0	= 0	= 0	= 0
Length without motor L2	mm	23,4	23,4	31,8	31,8	40,2	48,6	48,6
Mass without motor and flange	g	115	115	157	157	200	241	241
Operating temperature range	°C	-30 … +120						
Direction of rotation, drive to output		=						
Housing material		stainless steel						
Geartrain material		stainless steel						
Bearings on output shaft		ball bearings, preloaded						

[1] The reduction ratios are rounded, the exact values are available on request or at www.faulhaber.com.

Note:

The display shows the range of possible operation points of the drives at a given ambient temperature of 22°C.

The diagram indicates the recommended output speed in relation to the available torque at the output shaft.

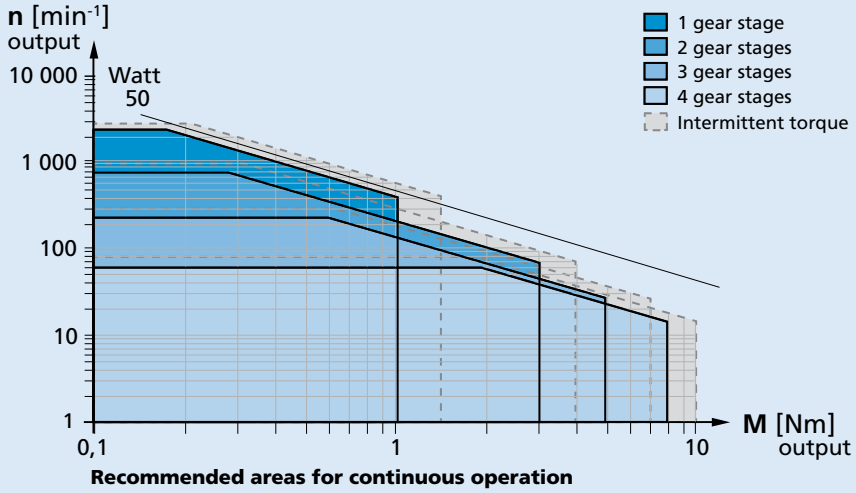

© DR. FRITZ FAULHABER GMBH & CO. KG
Specifications subject to change without notice.

Dimensional drawing

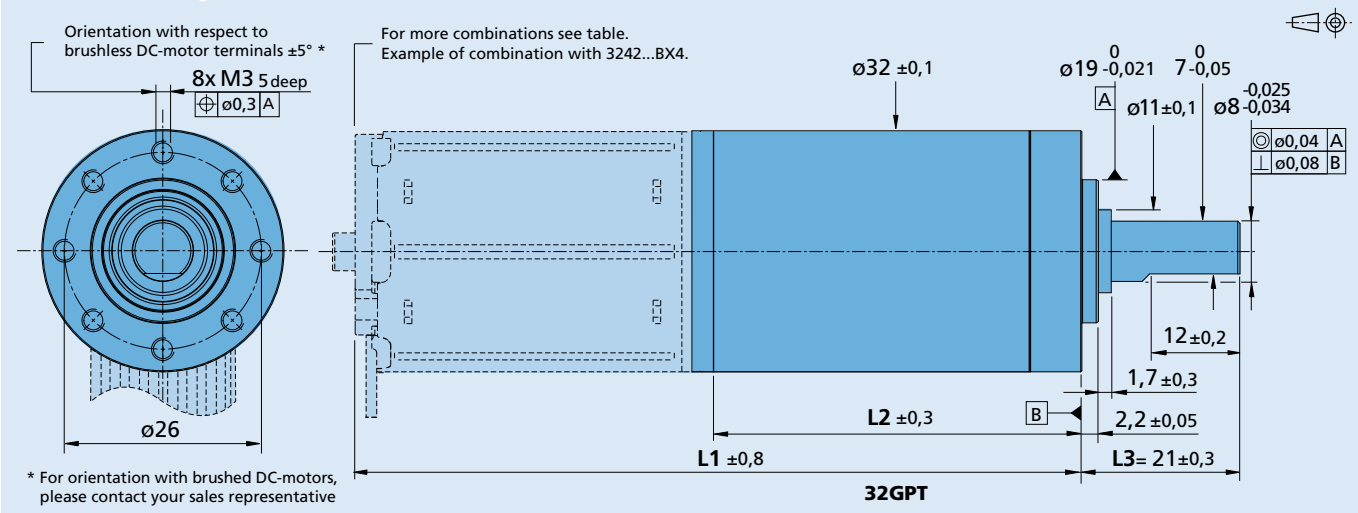

* For orientation with brushed DC-motors, please contact your sales representative

Options

Example product designation: **32GPT 24:1 KS3KL2**

Option	Type	Description
KS1	Output shaft	Round plain shaft, **L3**= 21 mm
KS2	Output shaft	Longer round plain shaft, **L3**= 31 mm
KS3	Output shaft	Shaft with double flat shape of 12 mm length on opposite sides, **L3**= 21 mm
KS4	Output shaft	Shaft with DIN 6885-A keyway and mating key with dimensions 2x2x12 mm, **L3**= 21 mm
KS6	Output shaft	Shaft with 12 mm single flat shape and 2 mm cross bore at 6 mm of shaft end, **L3**= 21 mm
KS7	Output shaft	Shaft with 12 mm single flat shape and M4 axial threaded hole, **L3**= 21 mm
KS8	Output shaft	Shaft with fork shape of 3 mm width opening, **L3**= 21 mm
KS9	Output shaft	Shaft with KS4 option and with M4 axial threaded hole, **L3**= 21 mm
KR1	Output shaft/flange	Shaft diameter 6 mm with flat shape 15 mm length and 4x M3 threads on flange, **L3**= 20 mm (compatible with 32A)
KP1	Ingress Protection	Gearhead with IP54 ingress protection rating (to be combined with specific protected motor)
KL1	Ambient conditions	Low temperature range of -55°C … +100°C
KL2	Ambient conditions	Vacuum down to 10^{-5} Pa @ 22°C
KL3	Ambient conditions	Temperature range of -55°C … +150°C and vacuum down to 10^{-9} Pa @ 60°C
KC1	Cable orientation	Motor cable/wires or terminals oriented at 15° CCW vs gearhead front threads
KC2	Cable orientation	Motor cable/wires or terminals oriented at 30° CCW vs gearhead front threads

Note: Specified values may differ from the standard values depending on the option. Please consult your sales representative for further information.

Product combination

Number of gear stages		1	2	3	4
L2 [mm] = length without motor		23,4	31,8	40,2	48,6
L1 [mm] = length with motor	2642X...CR/CXR	68,3	76,7	85,1	93,5
	2657X...CR/CXR	83,3	91,7	100,1	108,5
	2668X...CR	94,3	102,7	111,1	119,5
	3242X...CR	68,3	76,7	85,1	93,5
	3257X...CR	83,3	91,7	100,1	108,5
	3272X...CR	98,3	106,7	115,1	123,5
	2250X...BX4	78,1	86,5	94,9	103,3
	3242X...BX4	70,5	78,9	87,3	95,7
	3268X...BX4	96,5	104,9	113,3	121,7
	2264X...BP4	90,3	98,7	107,1	115,5
	3274X...BP4	104,4	112,8	121,2	129,6
	3056X...B	82,3	90,7	99,1	107,5
	3564X...B	90,3	98,7	107,1	115,5
	3216X...BXTH	43,1	51,5	59,9	68,3
	3216X...BXTR	42,3	50,7	59,1	67,5
	AM3248...10	68,3	76,7	85,1	93,5

© DR. FRITZ FAULHABER GMBH & CO. KG
Specifications subject to change without notice.

Planetary Gearheads

High Torque

18 Nm

10 000 min-1

Series 42GPT

Values at 22°C									
Number of gear stages		1	1	2	2	2	3	4	4
Reduction ratio [1] (rounded)		3:1	3,6:1 4,5:1 6,6:1	9:1	11:1	14:1 16:1 20:1 24:1 30:1 44:1	41:1 49:1 59:1 72:1 89:1 108:1 131:1 158:1 196:1	178:1 215:1 267:1 323:1 401:1 474:1 588:1 862:1	711:1 1 042:1 1 294:1
Continuous torque, max.	Nm	2,5	2,5	6	6	6	15,5	18	15
Intermittent torque, max.	Nm	3,3	3,3	8	8	8	20	25	20
Peak torque	Nm	4	4	11,5	11,5	11,5	25	34	30
Continuous input speed, max.	min-1	5 000	7 000	5 000	7 000	9 000	10 000	10 000	10 000
Intermittent input speed, max.	min-1	7 000	9 000	8 000	8 000	12 000	13 000	13 000	13 000
Continuous output power, max.	W	60	60	37	37	37	26	20	20
Intermittent output power, max.	W	90	90	56	56	56	39	30	30
Efficiency, max.	%	93	93	86	86	86	80	74	74
Input inertia with pinion, max.	gmm²	2 000	1 330	2 000	2 000	920	920	400	355
Torsional stiffness, typical	Nm/°	14	14	22	22	22	22	22	22
Backlash, at no-load, typical	°	0,4	0,4	0,4	0,4	0,4	0,4	0,4	0,4
Shaft load, max.:									
– radial (15 mm from mounting face)	N	200	200	280	280	280	310	390	390
– axial	N	170	170	200	200	200	230	250	250
Shaft press fit force, max.	N	250	250	250	250	250	250	300	300
Shaft play:									
– radial (15 mm from mounting face)	mm	≤ 0,07	≤ 0,07	≤ 0,07	≤ 0,07	≤ 0,07	≤ 0,07	≤ 0,07	≤ 0,07
– axial	mm	= 0	= 0	= 0	= 0	= 0	= 0	= 0	= 0
Length without motor L2	mm	30,8	30,8	43,2	43,2	43,2	55,7	68,1	68,1
Mass without motor and flange	g	275	275	375	375	375	475	575	575
Operating temperature range	°C	-30 … +120							
Direction of rotation, drive to output		=							
Housing material		stainless steel							
Geartrain material		stainless steel							
Bearings on output shaft		ball bearings, preloaded							

[1] The reduction ratios are rounded, the exact values are available on request or at www.faulhaber.com.

Note:

The display shows the range of possible operation points of the drives at a given ambient temperature of 22°C.

The diagram indicates the recommended output speed in relation to the available torque at the output shaft.

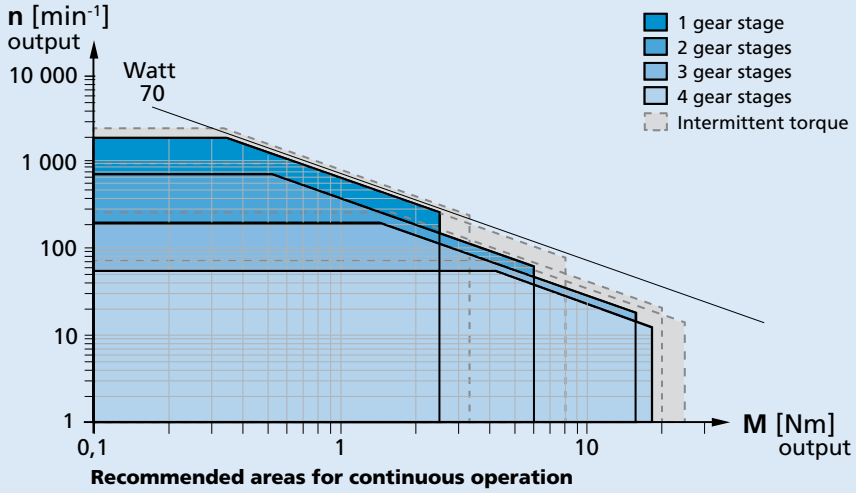

© DR. FRITZ FAULHABER GMBH & CO. KG
Specifications subject to change without notice.

Dimensional drawing

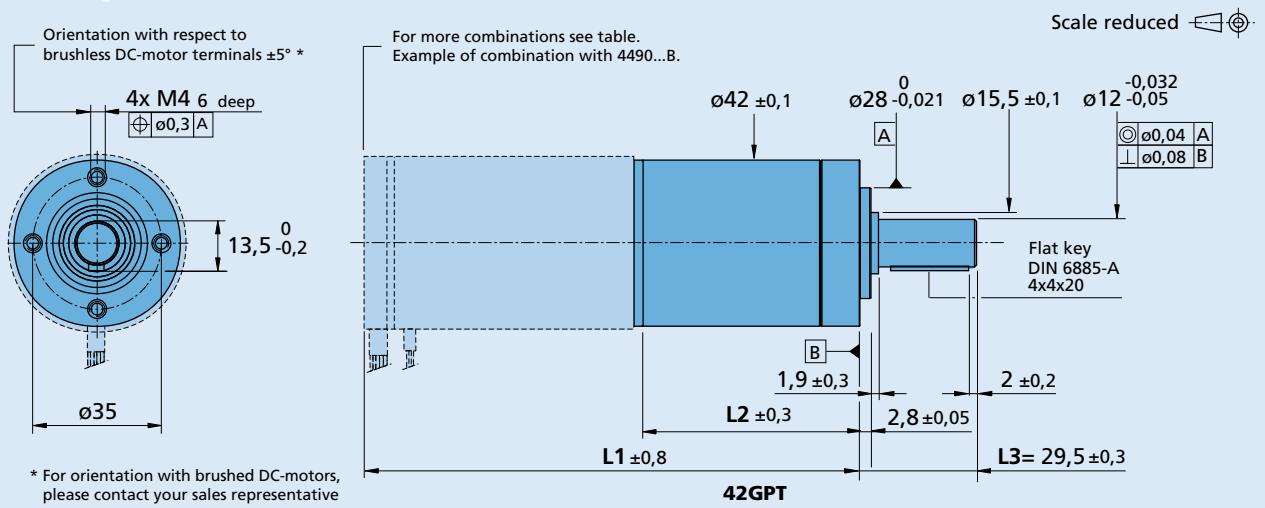

Options

Example product designation: **42GPT 158:1 KS2KL1**

Option	Type	Description
KS2	Output shaft	Longer round plain shaft, **L3**= 40 mm
KS4	Output shaft	Shaft diameter 10 mm with DIN 6885-A keyway and mating key with dimensions 4x4x18 mm, **L3**= 26 mm (compatible with 44/1)
KS7	Output shaft	Shaft with 20 mm single flat shape and M5 axial threaded hole, **L3**= 29,5 mm
KS9	Output shaft	Standard shaft (DIN 6885-A keyway and mating key with dimensions 4x4x20 mm) and with M5 axial threaded hole, **L3**= 29,5 mm
KP1	Ingress Protection	Gearhead with IP54 ingress protection rating (to be combined with specific protected motor)
KL1	Ambient conditions	Low temperature range of -55°C … +100°C
KL2	Ambient conditions	Vacuum down to 10^{-5} Pa @ 22°C
KL3	Ambient conditions	Temperature range of -55°C … +150°C and vacuum down to 10^{-9} Pa @ 60°C
KC1	Cable orientation	Motor cable/wires or terminals oriented at 15° CCW vs gearhead front threads
KC2	Cable orientation	Motor cable/wires or terminals oriented at 30° CCW vs gearhead front threads
KC3	Cable orientation	Motor cable/wires or terminals oriented at 45° CCW vs gearhead front threads
KC4	Cable orientation	Motor cable/wires or terminals oriented at 60° CCW vs gearhead front threads
KC5	Cable orientation	Motor cable/wires or terminals oriented at 75° CCW vs gearhead front threads

Note: Specified values may differ from the standard values depending on the option. Please consult your sales representative for further information.

Product combination

Number of gear stages		1	2	3	4
L2 [mm] = length without motor		30,8	43,2	55,7	68,1
L1 [mm] = length with motor	3242X...CR	76,0	88,4	100,9	113,3
	3257X...CR	91,0	103,4	115,9	128,3
	3272X...CR	106,0	118,4	130,9	143,3
	3863X...CR	98,0	110,4	122,9	135,3
	3890X...CR	124,0	136,4	148,9	161,3
	3242X...BX4	78,2	90,6	103,1	115,5
	3268X...BX4	104,2	116,6	129,1	141,5
	3274X...BP4	108,0	120,4	132,9	145,3
	3564X...B	98,0	110,4	122,9	135,3
	4221X...BXTH	56,0	68,4	80,9	93,3
	4221X...BXTR	55,2	67,6	80,1	92,5
	4490X...B	124,0	136,4	148,9	161,3
	4490X...BS	124,0	136,4	148,9	161,3

© DR. FRITZ FAULHABER GMBH & CO. KG
Specifications subject to change without notice.

Backwards

Linear Actuators

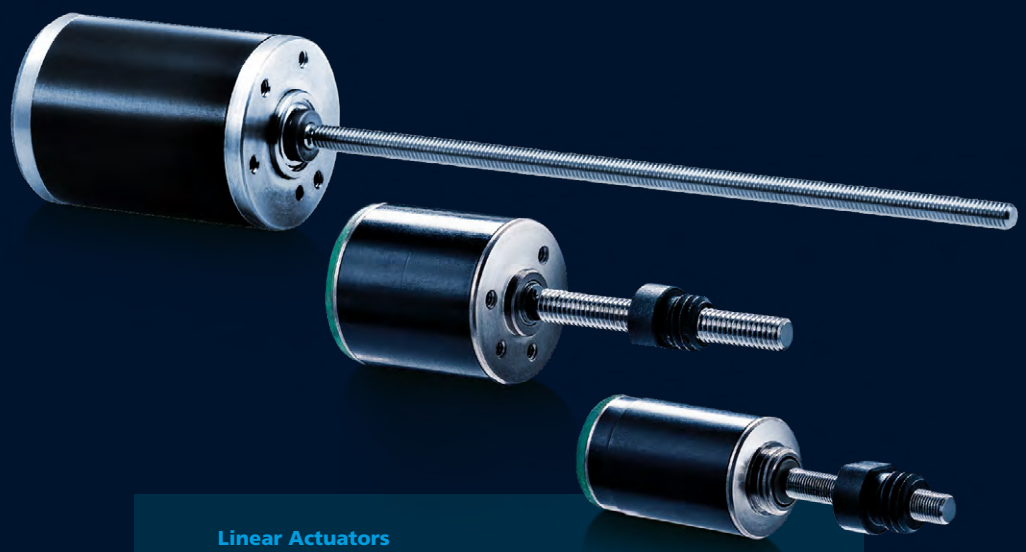

Linear Actuators

M1,2 x 0,25 x L1	Lead Screw
M1,6 x 0,35 x L1	Lead Screw
M2 x 0,2 x L1	Lead Screw
M3 x 0,5 x L1	Lead Screw
Options	

Backwards

Lead Screw

Linear actuation for positioning tasks

For combination with
Stepper Motors

Series M1,2 x 0,25 x L1

Ordering information	L1 (mm) =	7.5	15	Custom	
Order code (no bearing tip)		M1.2x7.5	M1.2x15	M1.2xL1*	
Order code (with bearing tip)		–	–	–	
Nominal diameter	1,2				mm
Pitch	0,25				mm
Material	Stainless steel				

* For custom length, please inquire with your point of sales

For combination with Stepper Motors DM0620, AM0820, AM1020

Important notes
The thrust curves include already a safety factor for the use of the stepper motor.
Please read the "Technical information" for a better understanding of the curves.

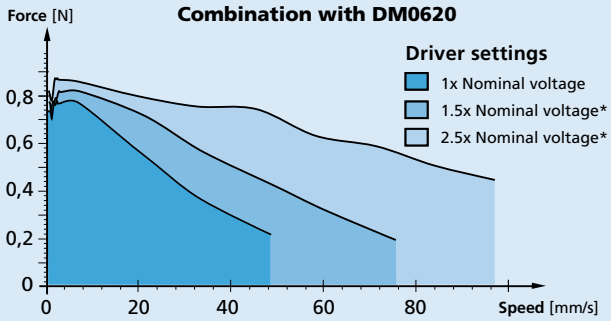

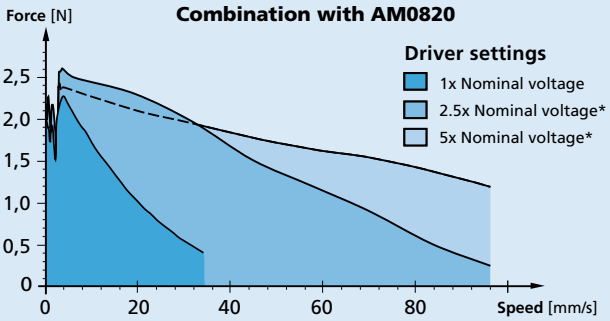

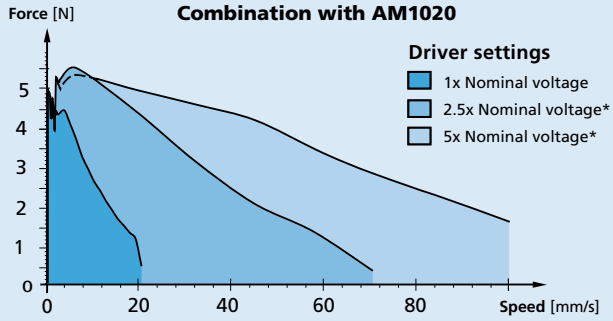

* Current limited to its nominal value

Dimensional drawing

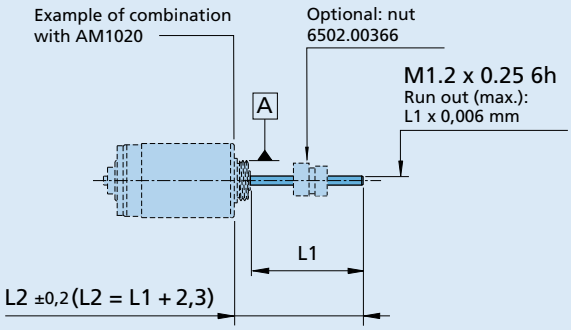

M1,2 x 0,25 x L1

© DR. FRITZ FAULHABER GMBH & CO. KG
Specifications subject to change without notice.
www.faulhaber.com

Lead Screw

Linear actuation for positioning tasks

For combination with
Stepper Motors

Series M1,6 x 0,35 x L1

Ordering information	L1 (mm) =	7.5	15	25	Custom	
Order code (no bearing tip)		M1.6x7.5	M1.6x15	–	M1.6xL1*	
Order code (with bearing tip)		–	M1.6x15T	M1.6x25T	M1.6xL1*T	
Nominal diameter	1,6					mm
Pitch	0,35					mm
Material	Stainless steel					

* For custom length, please inquire with your point of sales

For combination with Stepper Motors DM0620, AM0820, AM1020

Important notes
The thrust curves include already a safety factor for the use of the stepper motor.
Please read the "Technical information" for a better understanding of the curves.

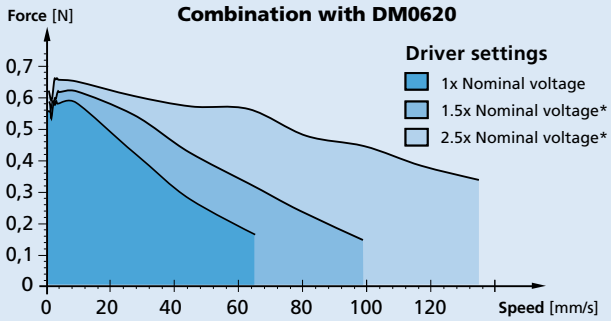

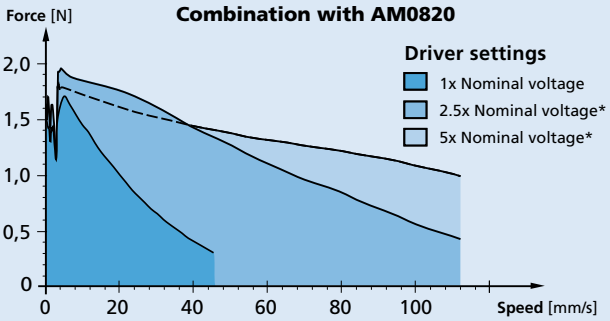

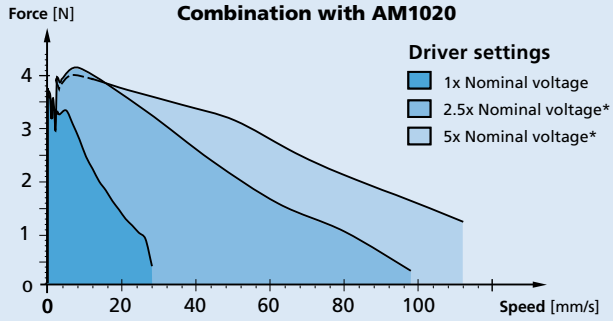

* Current limited to its nominal value

Dimensional drawing

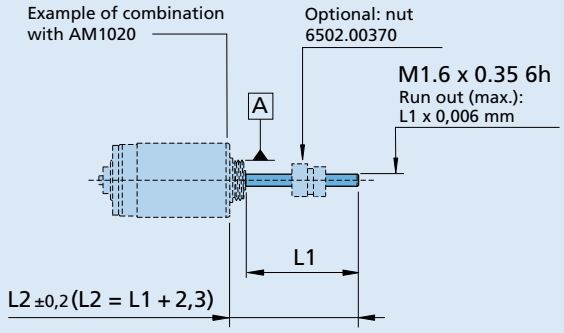

M1,6 x 0,35 x L1

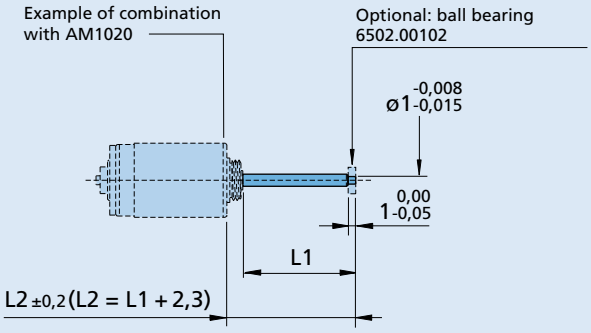

Version with bearing tip
M1,6 x 0,35 x L1 T

© DR. FRITZ FAULHABER GMBH & CO. KG
Specifications subject to change without notice.
www.faulhaber.com

Lead Screw

Linear actuation for positioning tasks

For combination with
Stepper Motors

Series M2 x 0,2 x L1

Ordering information	L1 (mm) =	15	25	28/30	Custom	
Order code (no bearing tip)		M2x15	M2x25	M2x30	M2xL1*	
Order code (with bearing tip)		M2x15T	M2x25T	M2x28T	M2xL1*T	
Nominal diameter	2,0					mm
Pitch	0,2					mm
Material	Stainless steel					

* For custom length, please inquire with your point of sales

For combination with Stepper Motors AM0820, AM1020, DM1220, AM1524

Important notes
The thrust curves include already a safety factor for the use of the stepper motor.
Please read the "Technical information" for a better understanding of the curves.

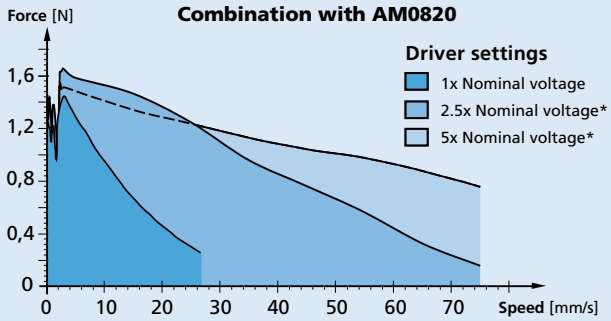

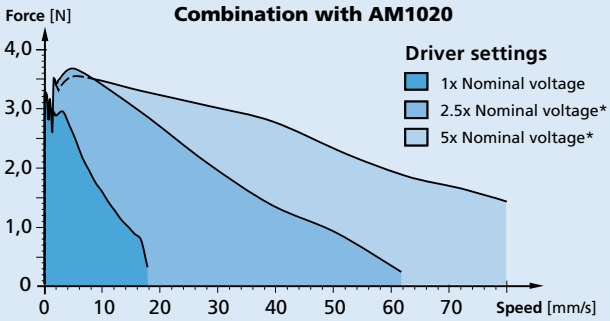

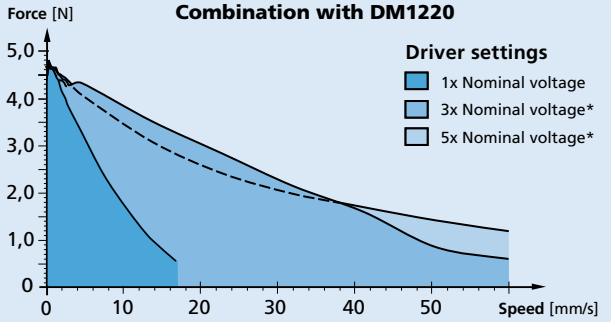

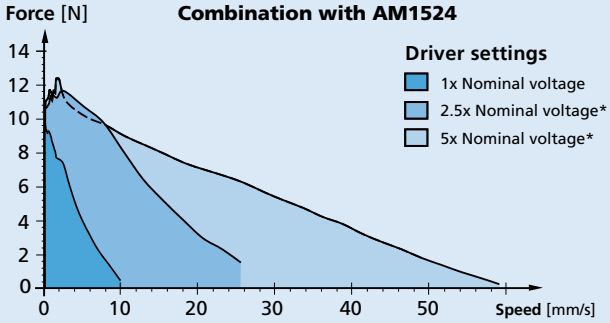

* Current limited to its nominal value

Dimensional drawing

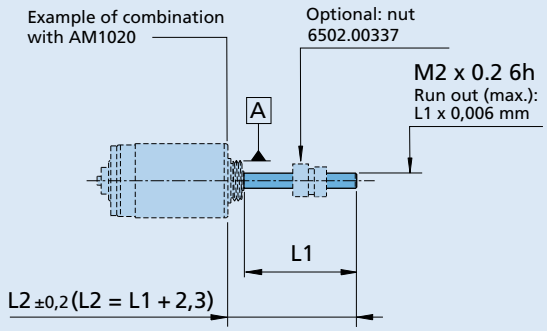

M2,0 x 0,2 x L1

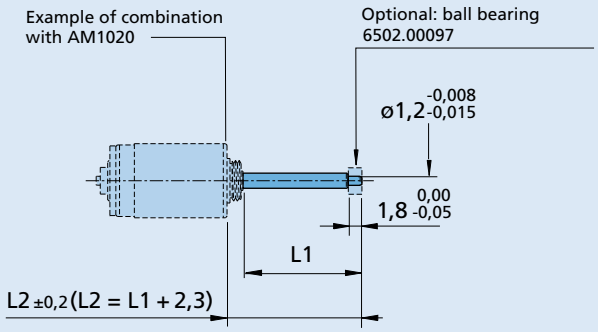

Version with bearing tip
M2,0 x 0,2 x L1 T

© DR. FRITZ FAULHABER GMBH & CO. KG
Specifications subject to change without notice.
www.faulhaber.com

Lead Screw

Linear actuation for positioning tasks

For combination with
Stepper Motors

Series M3 x 0,5 x L1

Ordering information	L1 (mm) =	15	25	50	Custom	
Order code (no bearing tip)		M3x15	M3x25	–	M3xL1*	
Order code (with bearing tip)		M3x15T	M3x25T	M3x50T	M3xL1*T	
Nominal diameter	3,0					mm
Pitch	0,5					mm
Material	Stainless steel					

* For custom length, please inquire with your point of sales

For combination with Stepper Motors DM1220, AM1524, AM2224R3

Important notes
The thrust curves include already a safety factor for the use of the stepper motor.
Please read the "Technical information" for a better understanding of the curves.

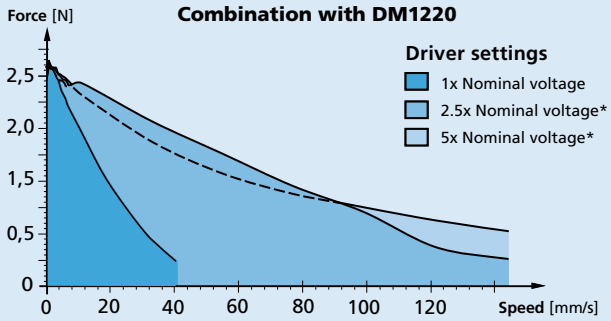

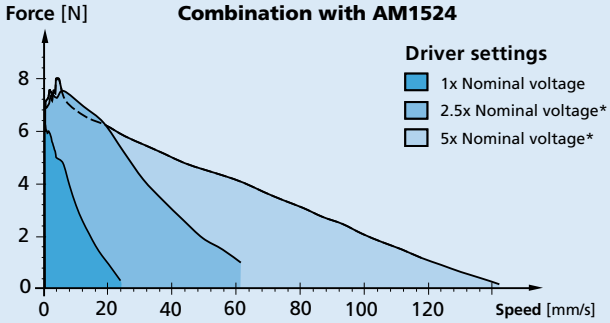

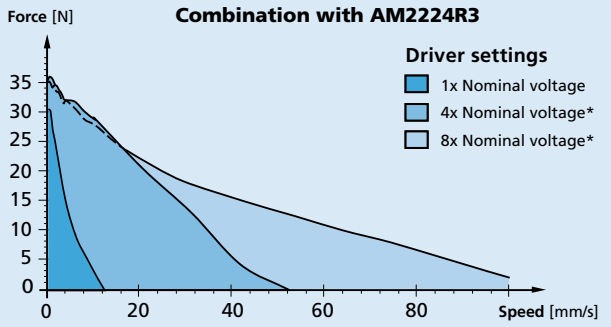

* Current limited to its nominal value

Dimensional drawing

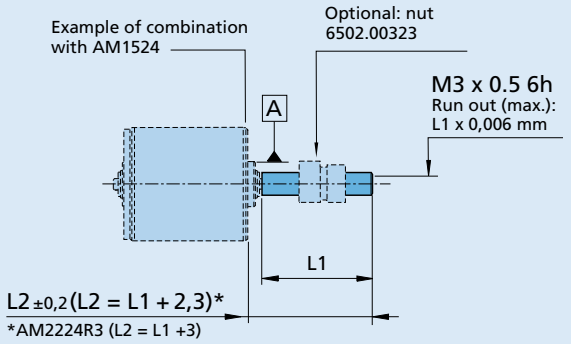

M3,0 x 0,5 x L1

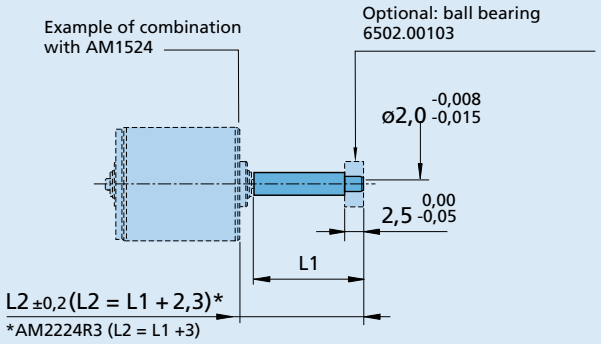

Version with bearing tip
M3,0 x 0,5 x L1 T

© DR. FRITZ FAULHABER GMBH & CO. KG
Specifications subject to change without notice.
www.faulhaber.com

Lead Screw

Optional nuts and bearings

Options

For M1,2 x 0,25 Lead screws

Scale 2:1

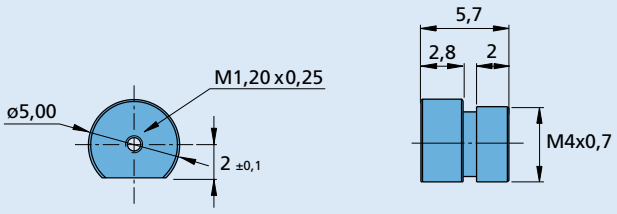

Nut Part No. 6502.00366, Self-lubricating synthetics material

For M1,6 x 0,35 Lead screws

Scale 2:1

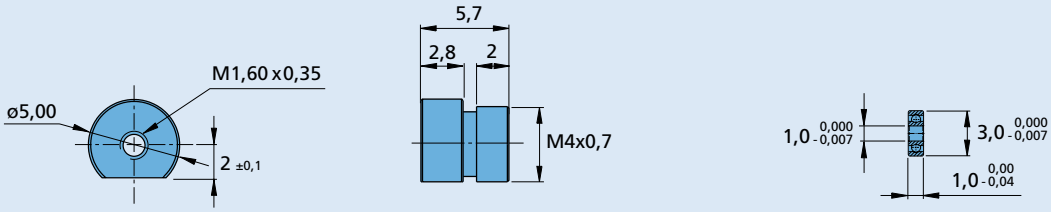

Nut Part No. 6502.00370, Self-lubricating synthetics material

Bearing for leadscrew tip Part No. 6502.00102

For M2,0 x 0,2 Lead screws

Scale 2:1

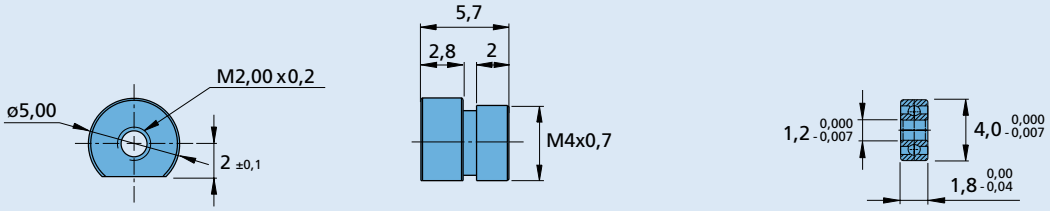

Nut Part No. 6502.00337, Self-lubricating synthetics material

Bearing for leadscrew tip Part No. 6502.00097

For M3,0 x 0,5 Lead screws

Scale 2:1

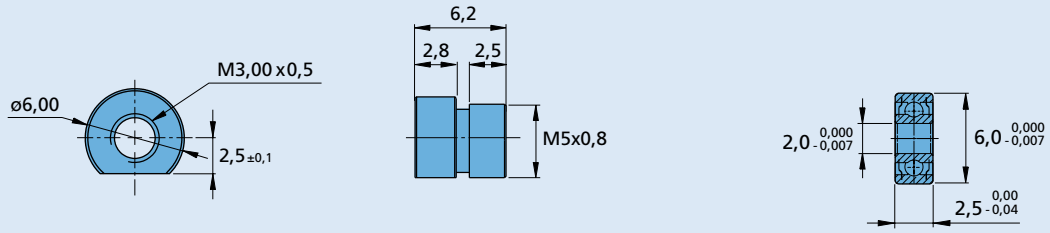

Nut Part No. 6502.00323, Self-lubricating synthetics material

Bearing for leadscrew tip Part No. 6502.00103

© DR. FRITZ FAULHABER GMBH & CO. KG
Specifications subject to change without notice.
www.faulhaber.com

FAULHABER L

FAULHABER L

06L ... SL	Gearhead with integrated Lead Screw, standard load	12 N
06L ... HL	Gearhead with integrated Lead Screw, high load	25 N
08L ... SL	Gearhead with integrated Lead Screw, standard load	23 N
08L ... HL	Gearhead with integrated Lead Screw, high load	40 N
10L ... SL	Gearhead with integrated Lead Screw, standard load	40 N
22L ... ML	Gearhead with integrated Lead Screw, metric thread	425 N
22L ... SB	Gearhead with integrated Ball Screw, standard version	580 N
22L ... PB	Gearhead with integrated Ball Screw, high accuracy	580 N
32L ... TL	Gearhead with integrated Lead Screw, trapezoidal thread	1800 N
32L ... ML	Gearhead with integrated Lead Screw, metric thread	1850 N
32L ... SB	Gearhead with integrated Ball Screw, standard version	1920 N
32L ... PB	Gearhead with integrated Ball Screw, high accuracy	1920 N

Backwards

NEW

FAULHABER

Linear Actuators

12 N

Gearhead with integrated Lead Screw, standard load

For combination with
DC-Micromotors
Brushless DC-Motors
Stepper Motors

Series 06L ... SL

Values at 22°C						
Number of gear stages		**1**	**2**	**3**	**4**	**5**
Reduction ratio (exact)		**4:1**	**16:1**	**64:1**	**256:1**	**1 024:1**
Continuous output speed, max. [1]	mm/s	25	6,3	1,6	0,4	0,1
Peak output speed, max. [1]	mm/s	33,3	8,3	2,1	0,5	0,1
Continuous input speed, max.	min^{-1}	12 000	12 000	12 000	12 000	12 000
Peak input speed, max.	min^{-1}	16 000	16 000	16 000	16 000	16 000
Continuous axial force, avg.	N	3	4	5	8	12
Peak axial force, dynamic, max.	N	6	8	12	15	15
Peak axial force, static, max.	N	16	16	16	16	16
Output power, max.	W	0,2	0,066	0,025	0,008	0,002
Efficiency of gearhead/coupler, max.	%	90	80	70	60	55
Efficiency of screw, max.	%	35	35	35	35	35
Mass inertia incl. screw, max. [2]	gmm^2	0,285	0,139	0,13	0,13	0,13
Accuracy, screw standard length, max.	µm	100	100	100	100	100
Radial load, max. (50 mm from flange)	N	≤ 5	≤ 5	≤ 5	≤ 5	≤ 5
Gearhead backlash, at no-load, typical	°	3	3	3	3	3
Radial play (screw, 3,5 mm from flange)	mm	≤ 0,06	≤ 0,06	≤ 0,06	≤ 0,06	≤ 0,06
Axial play:						
– screw	mm	0	0	0	0	0
– nut	µm	80	80	80	80	80
Screw length from flange:						
– standard	mm	50	50	50	50	50
– max.	mm	65	65	65	65	65
Length without motor L2	mm	9,8	12,5	15,2	17,9	20,6
Mass [2]	g	4	4,4	4,8	5,3	5,8
Screw type [3]		3x0,5 (mm) proprietary thread profile				
Screw material		stainless steel				
Nut material		cylindrical, plastic				
Housing material		stainless steel				
Geartrain material		steel				
Bearings on output shaft		ball bearings, preloaded				
Operating temperature range	°C	-30 … +80				

[1] According to selected reduction ratio, screw supported
[2] Standard length and standard nut
[3] Right handed, screw direction of rotation same as motor shaft.

Note:

The display shows the range of possible operation points of the drives at a given ambient temperature of 22°C.

The diagram indicates the recommended output speed in relation to the available output axial force.

For the stardard screw both supported and not, the diagram shows also the critical speeds and the buckling forces.

- Critical speed [3] (fixed-free), 179 mm/s
- Critical speed [3] (fixed-single), 950 mm/s
- Buckling force [3] (fixed-free), 195 N
- Buckling force [3] (fixed-single), 1563 N

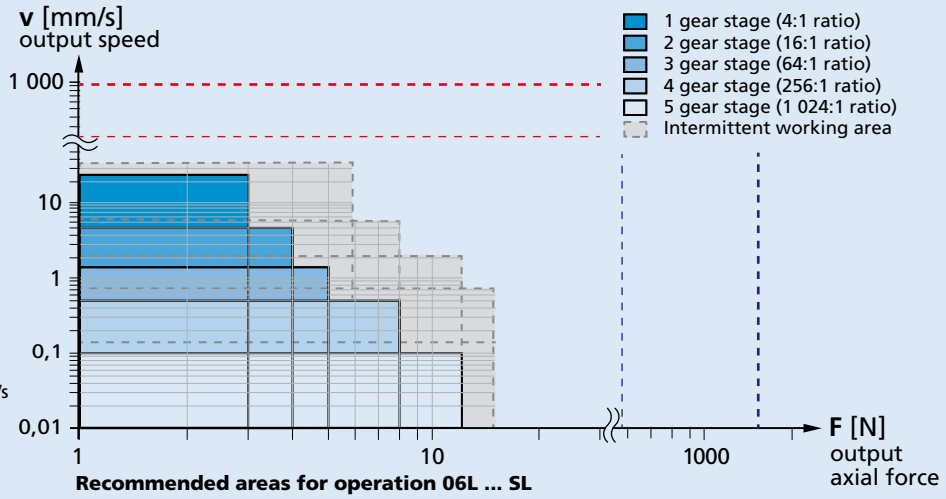

Recommended areas for operation 06L ... SL

© DR. FRITZ FAULHABER GMBH & CO. KG
Specifications subject to change without notice.

Dimensional drawing

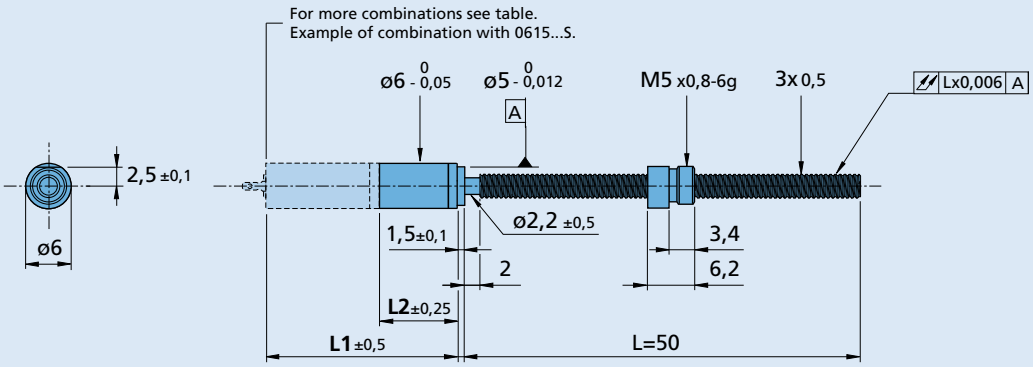

06L SL

Standard product includes cylindrical plastic nut, screw without lubricant.

Options

Example product designation: **06L 4:1 KL1 SL 3x0.5 50 KWL1**

Option	Type	Description
KL1	Gearhead ambient conditions	Low temperature range of -55°C to +100°C
KL2	Gearhead ambient conditions	Vacuum down to 10^{-5} Pa @ 22°
KL3	Gearhead ambient conditions	Temperature range of -55°C to +150°C and vacuum down to 10^{-9} Pa @ 60°C
KF2	Gearhead front flange	Front flange with thread M6x0.5
15	Screw	Standard length (lengths from 15 mm to 65 mm are available in 1mm increments)
25	Screw	Standard length (lengths from 15 mm to 65 mm are available in 1mm increments)
50	Screw	Standard length (lengths from 15 mm to 65 mm are available in 1mm increments)
KWS1	Screw	Bearing tip/journal (Ø 2mm, L=2.5mm)
KWL0	Screw ambient conditions	Not lubricated
KWL1	Screw ambient conditions	Low temperature range of -55°C to +100°C
KWL2	Screw ambient conditions	Vacuum down to 10^{-5} Pa @ 22°
KWL3	Screw ambient conditions	Temperature range of -55°C to +150°C and vacuum down to 10^{-9} Pa @ 60°C
KWN1	Nut	Cylindrical bronze nut
KWN3	Nut	Flanged bronze nut
KWN4	Nut	Flanged plastic nut, screw without lubricant
KWN9	Nut	No nut

Note: Specified values may differ from the standard values depending on the option. Please consult your sales representative for further information.

Product combination

Number of gear stages		1	2	3	4	5
L2 [mm] = length without motor		9,8	12,5	15,2	17,9	20,6
L1 [mm] = length with motor	0615C...S	24,8	27,5	30,2	32,9	35,6
	0515C...B	24,4	27,1	29,8	32,5	35,2
	0620C...B	29,8	32,5	35,2	37,9	40,6
	DM0620...35	19,3	22,0	24,7	27,4	30,1

© DR. FRITZ FAULHABER GMBH & CO. KG
Specifications subject to change without notice.

NEW

FAULHABER

Linear Actuators

25 N

Gearhead with integrated Lead Screw, high load

For combination with
DC-Micromotors
Brushless DC-Motors
Stepper Motors

Series 06L ... HL

Values at 22°C				
Number of gear stages		**3**	**4**	**5**
Reduction ratio (exact)		**64:1**	**256:1**	**1 024:1**
Continuous output speed, max. [1]	mm/s	1,6	0,4	0,1
Peak output speed, max. [1]	mm/s	2,1	0,5	0,1
Continuous input speed, max.	min^{-1}	12 000	12 000	12 000
Peak input speed, max.	min^{-1}	16 000	16 000	16 000
Continuous axial force, avg.	N	15	20	25
Peak axial force, dynamic, max.	N	25	30	35
Peak axial force, static, max.	N	80	80	80
Output power, max.	W	0,052	0,015	0,005
Efficiency of gearhead/coupler, max.	%	70	60	55
Efficiency of screw, max.	%	35	35	35
Mass inertia incl. screw, max. [2]	gmm^2	0,13	0,13	0,13
Accuracy, screw standard length, max.	µm	100	100	100
Radial load, max. (50 mm from flange)	N	≤ 5	≤ 5	≤ 5
Gearhead backlash, at no-load, typical	°	3	3	3
Radial play (screw, 3,5 mm from flange)	mm	≤ 0,06	≤ 0,06	≤ 0,06
Axial play:				
– screw	mm	0	0	0
– nut	µm	80	80	80
Screw length from flange:				
– standard	mm	50	50	50
– max.	mm	65	65	65
Length without motor L2	mm	15,2	17,9	20,6
Mass [2]	g	4,8	5,3	5,8
Screw type [3]		3x0,5 (mm) proprietary thread profile		
Screw material		stainless steel		
Nut material		cylindrical, plastic		
Housing material		stainless steel		
Geartrain material		steel		
Bearings on output shaft		ball bearings, preloaded		
Operating temperature range	°C	-30 … +80		

[1] According to selected reduction ratio, screw supported
[2] Standard length and standard nut
[3] Right handed, screw direction of rotation same as motor shaft.

Note:

The display shows the range of possible operation points of the drives at a given ambient temperature of 22°C.

The diagram indicates the recommended output speed in relation to the available output axial force.

For the stardard screw both supported and not, the diagram shows also the critical speeds and the buckling forces.

- Critical speed [3] (fixed-free), 179 mm/s
- Critical speed [3] (fixed-single), 950 mm/s
- Buckling force [3] (fixed-free), 195 N
- Buckling force [3] (fixed-single), 1563 N

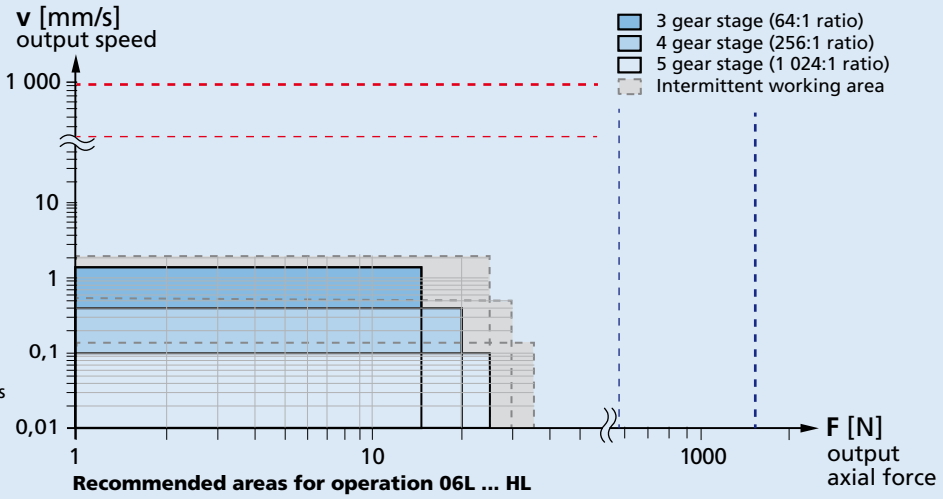

Recommended areas for operation 06L ... HL

For notes on technical data and lifetime performance refer to "Technical Information".

Backwards

© DR. FRITZ FAULHABER GMBH & CO. KG
Specifications subject to change without notice.

Dimensional drawing

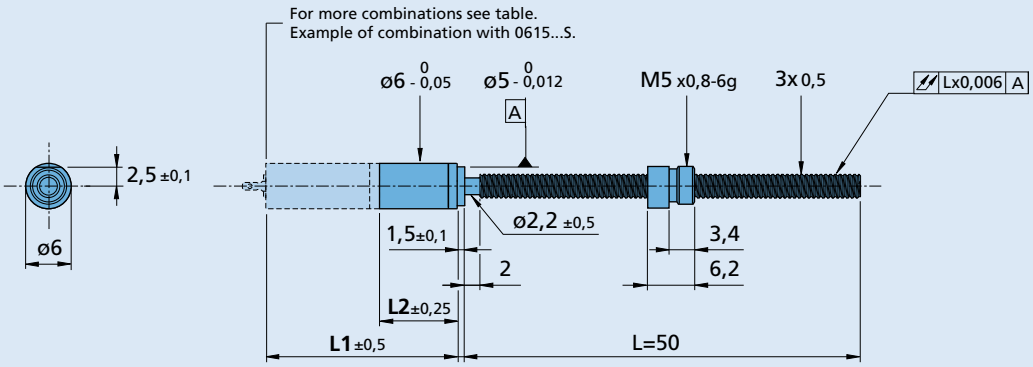

06L HL

Standard product includes cylindrical plastic nut, screw without lubricant.

Options

Example product designation: **06L 64:1 KL1 HL 3x0.5 50 KWL1**

Option	Type	Description
KL1	Gearhead ambient conditions	Low temperature range of -55°C to +100°C
KL2	Gearhead ambient conditions	Vacuum down to 10^{-5} Pa @ 22°
KL3	Gearhead ambient conditions	Temperature range of -55°C to +150°C and vacuum down to 10^{-9} Pa @ 60°C
KF2	Gearhead front flange	Front flange with thread M6x0.5
15	Screw	Standard length (lengths from 15 mm to 65 mm are available in 1mm increments)
25	Screw	Standard length (lengths from 15 mm to 65 mm are available in 1mm increments)
50	Screw	Standard length (lengths from 15 mm to 65 mm are available in 1mm increments)
KWS1	Screw	Bearing tip/journal (Ø 2mm, L=2.5mm)
KWL0	Screw ambient conditions	Not lubricated
KWL1	Screw ambient conditions	Low temperature range of -55°C to +100°C
KWL2	Screw ambient conditions	Vacuum down to 10^{-5} Pa @ 22°
KWL3	Screw ambient conditions	Temperature range of -55°C to +150°C and vacuum down to 10^{-9} Pa @ 60°C
KWN1	Nut	Cylindrical bronze nut
KWN3	Nut	Flanged bronze nut
KWN4	Nut	Flanged plastic nut, screw without lubricant
KWN9	Nut	No nut

Note: Specified values may differ from the standard values depending on the option. Please consult your sales representative for further information.

Product combination

Number of gear stages		3	4	5
L2 [mm] = length without motor		15,2	17,9	20,6
L1 [mm] = length with motor	0615C...S	30,2	32,9	35,6
	0515C...B	29,8	32,5	35,2
	0620C...B	35,2	37,9	40,6
	DM0620...35	24,7	27,4	30,1

© DR. FRITZ FAULHABER GMBH & CO. KG
Specifications subject to change without notice.

NEW

FAULHABER

Linear Actuators

23 N

Gearhead with integrated Lead Screw, standard load

For combination with
DC-Micromotors
Brushless DC-Motors
Stepper Motors

Series 08L ... SL

Values at 22°C						
Number of gear stages		**1**	**2**	**3**	**4**	**5**
Reduction ratio (exact)		**4:1**	**16:1**	**64:1**	**256:1**	**1 024:1**
Continuous output speed, max. [1]	mm/s	25	6,3	1,6	0,4	0,1
Peak output speed, max. [1]	mm/s	33,3	8,3	2,1	0,5	0,1
Continuous input speed, max.	min^{-1}	12 000	12 000	12 000	12 000	12 000
Peak input speed, max.	min^{-1}	16 000	16 000	16 000	16 000	16 000
Continuous axial force, avg.	N	4	8	12	15	23
Peak axial force, dynamic, max.	N	8	20	27	27	27
Peak axial force, static, max.	N	50	50	50	50	50
Output power, max.	W	0,267	0,167	0,056	0,014	0,003
Efficiency of gearhead/coupler, max.	%	90	80	70	60	55
Efficiency of screw, max.	%	35	35	35	35	35
Mass inertia incl. screw, max. [2]	gmm^2	0,285	0,139	0,13	0,129	0,129
Accuracy, screw standard length, max.	µm	100	100	100	100	100
Radial load, max. (50 mm from flange)	N	5	5	5	5	5
Gearhead backlash, at no-load, typical	°	3	3	3	3	3
Radial play (screw, 3,5 mm from flange)	mm	≤ 0,06	≤ 0,06	≤ 0,06	≤ 0,06	≤ 0,06
Axial play:						
– screw	mm	0	0	0	0	0
– nut	µm	80	80	80	80	80
Screw length from flange:						
– standard	mm	50	50	50	50	50
– max.	mm	65	65	65	65	65
Length without motor L2	mm	10,3	13	15,7	18,4	21,1
Mass [2]	g	5,4	6	6,8	7,6	8,5
Screw type [3]		3x0,5 (mm) proprietary thread profile				
Screw material		stainless steel				
Nut material		cylindrical, plastic				
Housing material		stainless steel				
Geartrain material		steel				
Bearings on output shaft		ball bearings, preloaded				
Operating temperature range	°C	-30 … +80				

[1] According to selected reduction ratio, screw supported
[2] Standard length and standard nut
[3] Right handed, screw direction of rotation same as motor shaft.

Note:

The display shows the range of possible operation points of the drives at a given ambient temperature of 22°C.

The diagram indicates the recommended output speed in relation to the available output axial force.

For the stardard screw both supported and not, the diagram shows also the critical speeds and the buckling forces.

- - - - Critical speed [3] (fixed-free), 179 mm/s
- - - - Critical speed [3] (fixed-single), 950 mm/s
- - - - Buckling force [3] (fixed-free), 195 N
- - - - Buckling force [3] (fixed-single), 1563 N

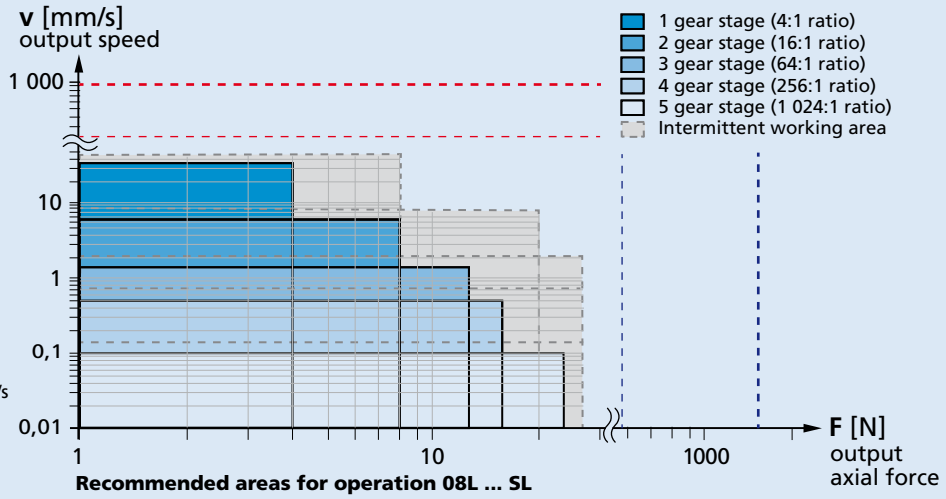

Recommended areas for operation 08L ... SL

© DR. FRITZ FAULHABER GMBH & CO. KG
Specifications subject to change without notice.

Dimensional drawing

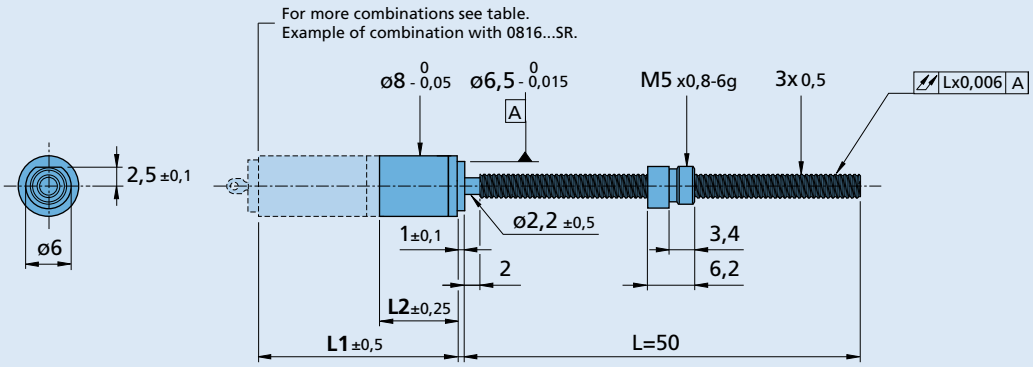

08L SL

Standard product includes cylindrical plastic nut, screw without lubricant.

Options

Example product designation: **08L 4:1 KL1 SL 3x0.5 50 KWL1**

Option	Type	Description
KL1	Gearhead ambient conditions	Low temperature range of -55°C to +100°C
KL2	Gearhead ambient conditions	Vacuum down to 10^{-5} Pa @ 22°
KL3	Gearhead ambient conditions	Temperature range of -55°C to +150°C and vacuum down to 10^{-9} Pa @ 60°C
KF2	Gearhead front flange	Front flange with thread M8x0.5
15	Screw	Standard length (lengths from 15 mm to 65 mm are available in 1mm increments)
25	Screw	Standard length (lengths from 15 mm to 65 mm are available in 1mm increments)
50	Screw	Standard length (lengths from 15 mm to 65 mm are available in 1mm increments)
KWS1	Screw	Bearing tip/journal (Ø 2mm, L=2.5mm)
KWL0	Screw ambient conditions	Not lubricated
KWL1	Screw ambient conditions	Low temperature range of -55°C to +100°C
KWL2	Screw ambient conditions	Vacuum down to 10^{-5} Pa @ 22°
KWL3	Screw ambient conditions	Temperature range of -55°C to +150°C and vacuum down to 10^{-9} Pa @ 60°C
KWN1	Nut	Cylindrical bronze nut
KWN3	Nut	Flanged bronze nut
KWN4	Nut	Flanged plastic nut, screw without lubricant
KWN9	Nut	No nut

Note: Specified values may differ from the standard values depending on the option. Please consult your sales representative for further information.

Product combination

Number of gear stages		1	2	3	4	5
L2 [mm] = length without motor		10,3	13	15,7	18,4	21,1
L1 [mm] = length with motor	0816P...SR	26,2	28,9	31,6	34,3	37,0
	0824P...B	34,4	37,1	39,8	42,5	45,2
	AM0820...08	24,1	26,8	29,5	32,2	34,9

© DR. FRITZ FAULHABER GMBH & CO. KG
Specifications subject to change without notice.

NEW

FAULHABER

Linear Actuators

40 N

Gearhead with integrated Lead Screw, high load

For combination with
DC-Micromotors
Brushless DC-Motors
Stepper Motors

Series 08L ... HL

Values at 22°C				
Number of gear stages		**3**	**4**	**5**
Reduction ratio (exact)		**64:1**	**256:1**	**1 024:1**
Continuous output speed, max. [1]	mm/s	1,6	0,4	0,1
Peak output speed, max. [1]	mm/s	2,1	0,5	0,1
Continuous input speed, max.	min^{-1}	12 000	12 000	12 000
Peak input speed, max.	min^{-1}	16 000	16 000	16 000
Continuous axial force, avg.	N	27	35	40
Peak axial force, dynamic, max.	N	35	40	50
Peak axial force, static, max.	N	80	80	80
Output power, max.	W	0,073	0,021	0,006
Efficiency of gearhead/coupler, max.	%	70	60	55
Efficiency of screw, max.	%	35	35	35
Mass inertia incl. screw, max. [2]	gmm^2	0,13	0,129	0,129
Accuracy, screw standard length, max.	µm	100	100	100
Radial load, max. (50 mm from flange)	N	5	5	5
Gearhead backlash, at no-load, typical	°	3	3	3
Radial play (screw, 3,5 mm from flange)	mm	≤ 0,06	≤ 0,06	≤ 0,06
Axial play:				
– screw	mm	0	0	0
– nut	µm	80	80	80
Screw length from flange:				
– standard	mm	50	50	50
– max.	mm	65	65	65
Length without motor L2	mm	15,7	18,4	21,1
Mass [2]	g	6,8	7,6	8,5
Screw type [3]		3x0,5 (mm) proprietary thread profile		
Screw material		stainless steel		
Nut material		cylindrical, plastic		
Housing material		stainless steel		
Geartrain material		steel		
Bearings on output shaft		ball bearings, preloaded		
Operating temperature range	°C	-30 … +80		

[1] According to selected reduction ratio, screw supported
[2] Standard length and standard nut
[3] Right handed, screw direction of rotation same as motor shaft.

Note:

The display shows the range of possible operation points of the drives at a given ambient temperature of 22°C.

The diagram indicates the recommended output speed in relation to the available output axial force.

For the stardard screw both supported and not, the diagram shows also the critical speeds and the buckling forces.

- Critical speed [3] (fixed-free), 179 mm/s
- Critical speed [3] (fixed-single), 950 mm/s
- Buckling force [3] (fixed-free), 195 N
- Buckling force [3] (fixed-single), 1563 N

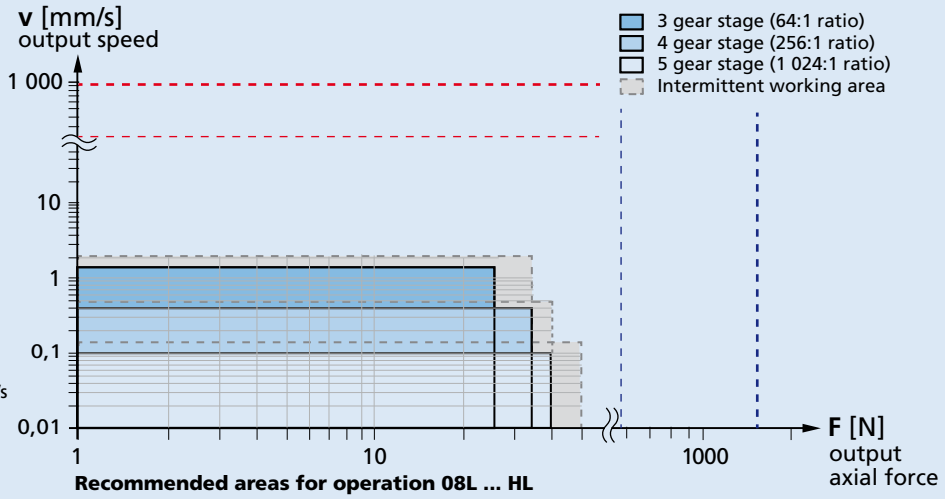

Recommended areas for operation 08L ... HL

For notes on technical data and lifetime performance refer to "Technical Information".

Edition 2024 Mar.14

Backwards

© DR. FRITZ FAULHABER GMBH & CO. KG
Specifications subject to change without notice.

www.faulhaber.com

Dimensional drawing

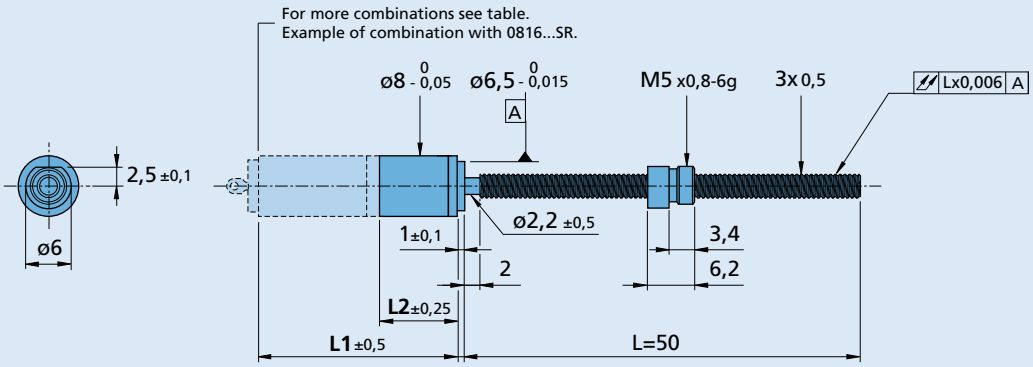

08L HL

Standard product includes cylindrical plastic nut, screw without lubricant.

Options

Example product designation: **08L 64:1 KL1 HL 3x0.5 50 KWL1**

Option	Type	Description
KL1	Gearhead ambient conditions	Low temperature range of -55°C to +100°C
KL2	Gearhead ambient conditions	Vacuum down to 10^{-5} Pa @ 22°
KL3	Gearhead ambient conditions	Temperature range of -55°C to +150°C and vacuum down to 10^{-9} Pa @ 60°C
KF2	Gearhead front flange	Front flange with thread M8x0.5
15	Screw	Standard length (lengths from 15 mm to 65 mm are available in 1mm increments)
25	Screw	Standard length (lengths from 15 mm to 65 mm are available in 1mm increments)
50	Screw	Standard length (lengths from 15 mm to 65 mm are available in 1mm increments)
KWS1	Screw	Bearing tip/journal (Ø 2mm, L=2.5mm)
KWL0	Screw ambient conditions	Not lubricated
KWL1	Screw ambient conditions	Low temperature range of -55°C to +100°C
KWL2	Screw ambient conditions	Vacuum down to 10^{-5} Pa @ 22°
KWL3	Screw ambient conditions	Temperature range of -55°C to +150°C and vacuum down to 10^{-9} Pa @ 60°C
KWN1	Nut	Cylindrical bronze nut
KWN3	Nut	Flanged bronze nut
KWN4	Nut	Flanged plastic nut, screw without lubricant
KWN9	Nut	No nut

Note: Specified values may differ from the standard values depending on the option. Please consult your sales representative for further information.

Product combination

Number of gear stages		3	4	5
L2 [mm] = length without motor		15,7	18,4	21,1
L1 [mm] = length with motor	0816P...SR	31,6	34,3	37,0
	0824P...B	39,8	42,5	45,2
	AM0820...08	29,5	32,2	34,9

© DR. FRITZ FAULHABER GMBH & CO. KG
Specifications subject to change without notice.

NEW

FAULHABER

Linear Actuators

40 N

Gearhead with integrated Lead Screw, standard load

For combination with
DC-Micromotors
Brushless DC-Motors
Stepper Motors

Series 10L ... SL

Values at 22°C						
Number of gear stages		**1**	**2**	**3**	**4**	**5**
Reduction ratio (exact)		**4:1**	**16:1**	**64:1**	**256:1**	**1 024:1**
Continuous output speed, max. [1]	mm/s	25	6,3	1,6	0,4	0,1
Peak output speed, max. [1]	mm/s	33,3	8,3	2,1	0,5	0,1
Continuous input speed, max.	min^{-1}	12 000	12 000	12 000	12 000	12 000
Peak input speed, max.	min^{-1}	16 000	16 000	16 000	16 000	16 000
Continuous axial force, avg.	N	5	10	15	30	40
Peak axial force, dynamic, max.	N	10	20	30	50	50
Peak axial force, static, max.	N	60	60	60	60	60
Output power, max.	W	0,125	0,062	0,023	0,012	0,004
Efficiency of gearhead/coupler, max.	%	90	80	70	60	55
Efficiency of screw, max.	%	35	35	35	35	35
Mass inertia incl. screw, max. [2]	gmm^2	0,285	0,139	0,13	0,13	0,13
Accuracy, screw standard length, max.	µm	100	100	100	100	100
Radial load, max. (50 mm from flange)	N	5	5	5	5	5
Gearhead backlash, at no-load, typical	°	3	3	3	3	3
Radial play (screw, 3,5 mm from flange)	mm	≤ 0,06	≤ 0,06	≤ 0,06	≤ 0,06	≤ 0,06
Axial play:						
– screw	mm	0	0	0	0	0
– nut	µm	80	80	80	80	80
Screw length from flange:						
– standard	mm	50	50	50	50	50
– max.	mm	65	65	65	65	65
Length without motor L2	mm	10,7	13,8	16,9	20	23,1
Mass [2]	g	7,9	9	10,1	11,2	13,3
Screw type [3]		3x0,5 (mm) proprietary thread profile				
Screw material		stainless steel				
Nut material		cylindrical, plastic				
Housing material		stainless steel				
Geartrain material		steel				
Bearings on output shaft		ball bearings, preloaded				
Operating temperature range	°C	-30 … +80				

[1] According to selected reduction ratio, screw supported
[2] Standard length and standard nut
[3] Right handed, screw direction of rotation same as motor shaft.

Note:

The display shows the range of possible operation points of the drives at a given ambient temperature of 22°C.

The diagram indicates the recommended output speed in relation to the available output axial force.

For the stardard screw both supported and not, the diagram shows also the critical speeds and the buckling forces.

- Critical speed [3] (fixed-free), 179 mm/s
- Critical speed [3] (fixed-single), 950 mm/s
- Buckling force [3] (fixed-free), 195 N
- Buckling force [3] (fixed-single), 1563 N

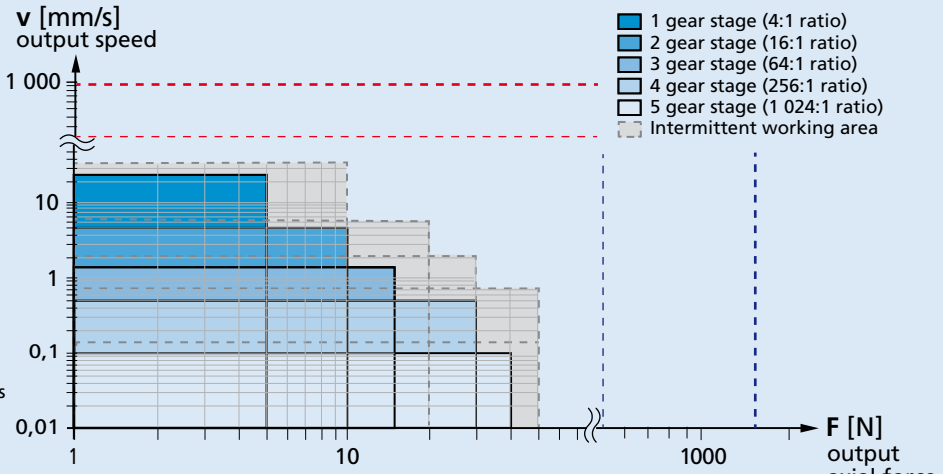

Recommended areas for operation 10L ... SL

For notes on technical data and lifetime performance refer to "Technical Information".

Backwards

© DR. FRITZ FAULHABER GMBH & CO. KG
Specifications subject to change without notice.

Dimensional drawing

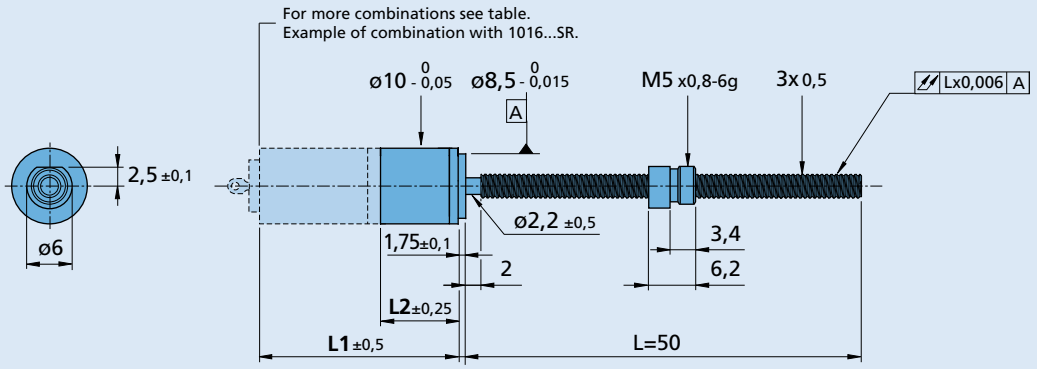

10L SL

Standard product includes cylindrical plastic nut, screw without lubricant.

Options

Example product designation: **10L 4:1 KL1 SL 3x0.5 50 KWL1**

Option	Type	Description
KL1	Gearhead ambient conditions	Low temperature range of -55°C to +100°C
KL2	Gearhead ambient conditions	Vacuum down to 10^{-5} Pa @ 22°
KL3	Gearhead ambient conditions	Temperature range of -55°C to +150°C and vacuum down to 10^{-9} Pa @ 60°C
KF1	Gearhead front flange	Front flange with four threaded holes M1.2x0.25
KF2	Gearhead front flange	Front flange with thread M10x0.5
15	Screw	Standard length (lengths from 15 mm to 65 mm are available in 1mm increments)
25	Screw	Standard length (lengths from 15 mm to 65 mm are available in 1mm increments)
50	Screw	Standard length (lengths from 15 mm to 65 mm are available in 1mm increments)
KWS1	Screw	Bearing tip/journal (Ø 2mm, L=2.5mm)
KWL0	Screw ambient conditions	Not lubricated
KWL1	Screw ambient conditions	Low temperature range of -55°C to +100°C
KWL2	Screw ambient conditions	Vacuum down to 10^{-5} Pa @ 22°
KWL3	Screw ambient conditions	Temperature range of -55°C to +150°C and vacuum down to 10^{-9} Pa @ 60°C
KWN1	Nut	Cylindrical bronze nut
KWN3	Nut	Flanged bronze nut
KWN4	Nut	Flanged plastic nut, screw without lubricant
KWN9	Nut	No nut

Note: Specified values may differ from the standard values depending on the option. Please consult your sales representative for further information.

Product combination

Number of gear stages		1	2	3	4	5
L2 [mm] = length without motor		10,7	13,8	16,9	20	23,1
L1 [mm] = length with motor	1219M...G	29,4	32,5	35,6	38,7	41,8
	0816M...SR	26,6	29,7	32,8	35,9	39,0
	1016M...SR	26,6	29,7	32,8	35,9	39,0
	1024M...SR	34,6	37,7	40,8	43,9	47,0
	1224M...SR	34,9	38,0	41,1	44,2	47,3
	0824M...B	34,8	37,9	41,0	44,1	47,2
	1028M...B	38,8	41,9	45,0	48,1	51,2
	1218M...B	28,7	31,8	34,9	38,0	41,1
	1226M...B	36,7	39,8	42,9	46,0	49,1
	AM0820...10	24,5	27,6	30,7	33,8	36,9
	AM1020...08	26,6	29,7	32,8	35,9	39,0
	DM1220...55	28,1	31,2	34,3	37,4	40,5

© DR. FRITZ FAULHABER GMBH & CO. KG
Specifications subject to change without notice.

NEW

FAULHABER

Linear Actuators

425 N

Gearhead with integrated Lead Screw, metric thread

For combination with
DC-Micromotors
Brushless DC-Motors
Stepper Motors

Series 22L ... ML

Values at 22°C

Number of gear stages		**1**	**1**	**2**	**2**	**3**	**4**
Reduction ratio [1] (rounded)		**1:1**	**3:1** **3,6:1** **4,5:1** **6,6:1**	**9:1**	**11:1** **14:1** **16:1** **20:1** **24:1** **30:1** **44:1**	**41:1** **49:1** **59:1** **72:1** **89:1** **108:1** **131:1** **158:1** **196:1**	**178:1** **215:1** **267:1** **323:1** **401:1** **474:1** **588:1** **711:1** **862:1** **1 042:1** **1 294:1**
Continuous output speed, max. [2]	mm/s	40	36,7…22,7	18,5	18,2…4,55	6,1…1,28	1,4…0,19
Peak output speed, max. [2]	mm/s	83	61,1…27,8	22,2	22,7…5,68	8,13…1,7	1,87…0,26
Continuous input speed, max.	min^{-1}	2 400	6 600	10 000	12 000	15 000	15 000
Peak input speed, max.	min^{-1}	5 000	11 000	12 000	15 000	20 000	20 000
Continuous axial force, avg.	N	34	37…58	73	75…298	220…425	425
Peak axial force, dynamic, max.	N	425	425	425	425	425	425
Peak axial force, static, max.	N	850	850	850	850	850	850
Output power, max.	W	7	7	4	4	3	1
Efficiency of gearhead/coupler, max.	%	95	92	82	82	78	65
Efficiency of screw, max.	%	24	24	24	24	24	24
Mass inertia incl. screw, max. [3]	gmm^2	648	106	81	81	33	14
Accuracy, screw standard length, max.	µm	171	172	172	172	172	172
Radial load, max. (15 mm from flange)	N	90	105	135	135	180	205
Gearhead backlash, at no-load, typical	°	0,33	0,8	0,8	0,8	0,8	0,8
Radial play (screw, 10 mm from flange)	mm	≤ 0,05	≤ 0,05	≤ 0,05	≤ 0,05	≤ 0,05	≤ 0,05
Axial play:							
– screw	µm	= 0	= 0	= 0	= 0	= 0	= 0
– nut	µm	144	144	144	144	144	144
Screw length from flange:							
– standard	mm	150	150	150	150	150	150
– max.	mm	200	200	200	200	200	200
Length without motor L2	mm	30,9	30,9	37,2	37,2	43,5	49,9
Mass [3]	g	107	111	126	126	142	157

Screw type		M6x1 right handed, screw direction of rotation same as motor shaft.
Screw material		stainless steel
Nut material		cylindric, lead-free brass
Housing material		stainless steel
Geartrain material		stainless steel
Bearings on output shaft		ball bearings, preloaded
Operating temperature range	°C	-30 … +120

[1] The reduction ratios are rounded, the exact values are available on request or at www.faulhaber.com.
[2] According to selected reduction ratio, screw supported
[3] Standard length and standard nut

Note:

The display shows the range of possible operation points of the drives at a given ambient temperature of 22°C.

The diagram indicates the recommended output speed in relation to the available output axial force.

For the stardard screw both supported and not, the diagram shows also the critical speeds and the buckling forces.

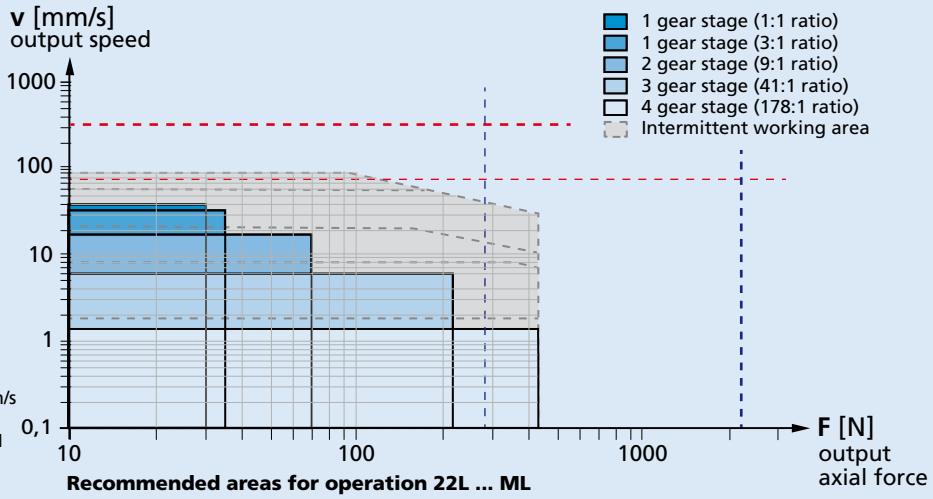

Recommended areas for operation 22L ... ML

For notes on technical data and lifetime performance refer to "Technical Information".

© DR. FRITZ FAULHABER GMBH & CO. KG
Specifications subject to change without notice.

Dimensional drawing

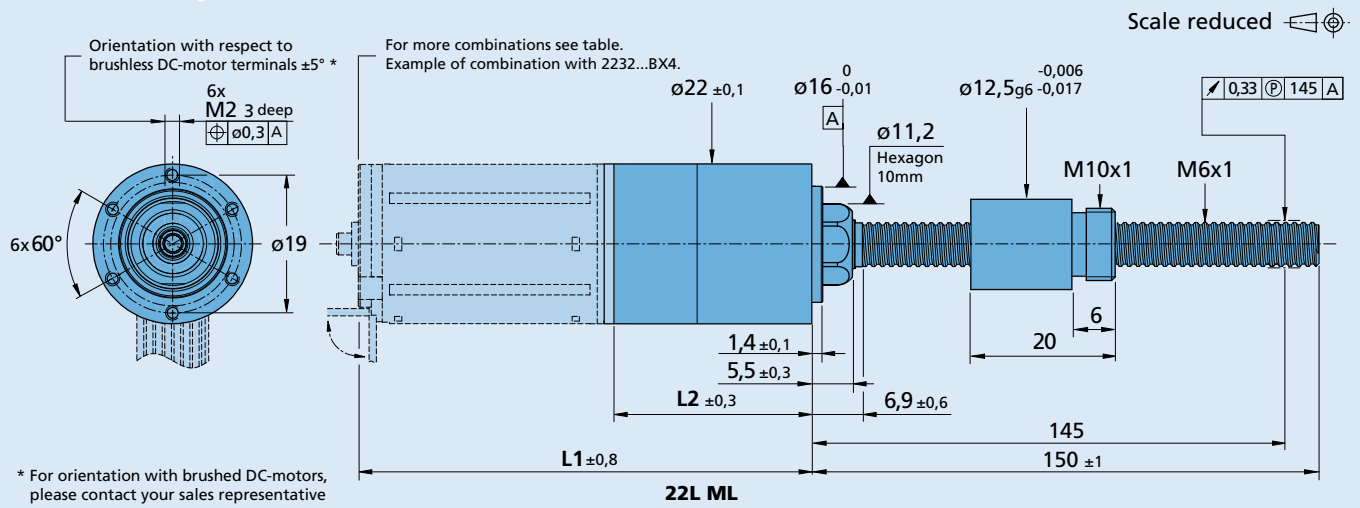

Options

Example product designation: **22L 30:1 KP1 ML 6x1 150 KWS1**

Option	Type	Description
KL1	Gearhead ambient conditions	Low temperature range of -55°C +100°C
KL2	Gearhead ambient conditions	Vacuum down to 10^{-5} Pa @22°C
KL3	Gearhead ambient conditions	Temperature range of -55°C +150°C and vacuum down to 10^{-9} Pa @60°C
KP1	Gearhead protection	IP54
KC1	Cable orientation	Motor cable/wires or terminals oriented at 15° CCW vs gearhead front threads
KC2	Cable orientation	Motor cable/wires or terminals oriented at 30° CCW vs gearhead front threads
KC3	Cable orientation	Motor cable/wires or terminals oriented at 45° CCW vs gearhead front threads
150	Screw	Standard length (150 mm), length from 45 mm up to 200 mm are available with 5 mm steps
KWS1	Screw	Bearing tip/journal (Ø 4mm, L=5mm)
KWL0	Screw ambient conditions	Not lubricated
KWL2	Screw ambient conditions	Vacuum down to 10^{-5} Pa @22°C
KWL3	Screw ambient conditions	Temperature range of -55°C +150°C and vacuum down to 10^{-9} Pa @60°C
KWN2	Nut	Cylindrical plastic nut with double 5 mm flats
KWN3	Nut	Flanged lead-free brass nut
KWN4	Nut	Flanged plastic nut
KWN5	Nut	No backlash lead-free brass nut
KWN8	Nut	Cylindrical lead-free brass nut with double 5 mm flats
KWN9	Nut	No nut

Note: Specified values may differ from the standard values depending on the option. Please consult your sales representative for further information.

Product combination

Number of gear stages		1	2	3	4
L2 [mm] = length without motor		30,9	37,2	43,5	49,9
L1 [mm] = length with motor	2237U...CXR	70,7	77,0	83,3	89,7
	2342X...CR	74,6	80,9	87,2	93,6
	2642X...CR/CXR	78,0	84,3	90,6	97,0
	2657X...CR/CXR	93,0	99,3	105,6	112,0
	2668X...CR	104,0	110,3	116,6	123,0
	2232X...BX4	66,4	72,7	79,0	85,4
	2250X...BX4	84,4	90,7	97,0	103,4
	2264X...BP4	100,0	106,3	112,6	119,0
	2214X...BXTH	47,4	53,7	60,0	66,4
	2214X...BXTR	46,6	52,9	59,2	65,6
	3216X...BXTH	52,8	59,1	65,4	71,8
	3216X...BXTR	52,0	58,3	64,6	71,0
	2036U...B	69,6	75,9	82,2	88,6
	2057X...B	89,6	95,9	102,2	108,6
	2444X...B	76,6	82,9	89,2	95,6
	AM2224...10	61,4	67,7	74,0	80,4

© DR. FRITZ FAULHABER GMBH & CO. KG
Specifications subject to change without notice.

NEW

FAULHABER

Linear Actuators

580 N

Gearhead with integrated Ball Screw, s
tandard version

For combination with
DC-Micromotors
Brushless DC-Motors
Stepper Motors

Series 22L ... SB

Values at 22°C

Number of gear stages		**1**	**1**	**2**	**2**	**3**	**4**
Reduction ratio [1] (rounded)		**1:1**	**3:1** **3,6:1** **4,5:1** **6,6:1**	**9:1**	**11:1** **14:1** **16:1** **20:1** **24:1** **30:1** **44:1**	**41:1** **49:1** **59:1** **72:1** **89:1** **108:1** **131:1** **158:1** **196:1**	**178:1** **215:1** **267:1** **323:1** **401:1** **474:1** **588:1** **711:1** **862:1** **1 042:1** **1 294:1**
Continuous output speed, max. [2]	mm/s	120	100…45,4	37	36,8…9,18	12,4…2,55	2,81…0,39
Peak output speed, max. [2]	mm/s	150	122…55,6	44,4	46…11,5	16,5…3,4	3,7…0,5
Continuous input speed, max.	min^{-1}	3 600	9 000	10 000	12 000	15 000	15 000
Peak input speed, max.	min^{-1}	4 500	11 000	12 000	15 000	20 000	20 000
Continuous axial force, avg.	N	84	90…117	125	126…200	181…305	295…572
Peak axial force, dynamic, max.	N	580	580	580	580	580	580
Peak axial force, static, max.	N	670	670	670	670	670	670
Output power, max.	W	27	27	16	16	9	2
Efficiency of gearhead/coupler, max.	%	95	92	82	82	82	65
Efficiency of screw, max.	%	90	90	90	90	90	90
Mass inertia incl. screw, max. [3]	gmm^2	648	106	81	81	33	14
Accuracy, screw standard length, max.	µm	24	26	26	26	26	26
Radial load, max. (15 mm from flange)	N	90	105	135	135	180	205
Gearhead backlash, at no-load, typical	°	0,33	0,8	0,8	0,8	0,8	0,8
Radial play (screw, 10 mm from flange)	mm	≤ 0,05	≤ 0,05	≤ 0,05	≤ 0,05	≤ 0,05	≤ 0,05
Axial play:							
– screw	mm	= 0	= 0	= 0	= 0	= 0	= 0
– nut	µm	10	10	10	10	10	10
Screw length from flange:							
– standard	mm	150	150	150	150	150	150
– max.	mm	200	200	200	200	200	200
Length without motor L2	mm	30,9	30,9	37,2	37,2	43,5	49,9
Mass [3]	g	107	111	126	126	142	157

Screw type		6x2 IT3 - right handed, screw direction of rotation same as motor shaft.
Screw material		stainless steel
Nut material		cylindric, metal
Housing material		stainless steel
Geartrain material		stainless steel
Bearings on output shaft		ball bearings, preloaded
Operating temperature range	°C	-20 … +80

[1] The reduction ratios are rounded, the exact values are available on request or at www.faulhaber.com.
[2] According to selected reduction ratio, screw supported
[3] Standard length and standard nut

Note:

The display shows the range of possible operation points of the drives at a given ambient temperature of 22°C.

The diagram indicates the recommended output speed in relation to the available output axial force.

For the stardard screw both supported and not, the diagram shows also the critical speeds and the buckling forces.

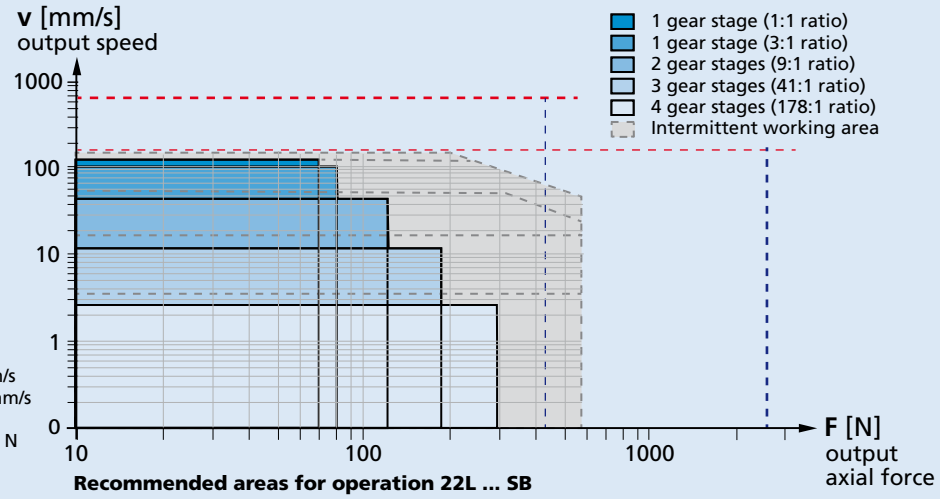

Recommended areas for operation 22L ... SB

© DR. FRITZ FAULHABER GMBH & CO. KG
Specifications subject to change without notice.

Dimensional drawing

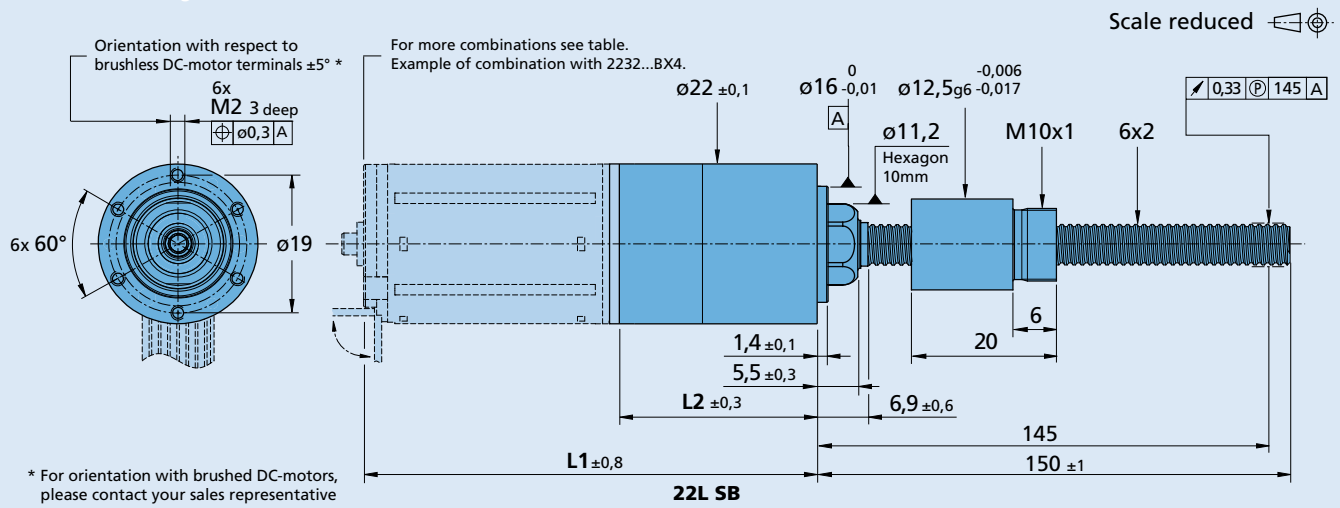

Options

Example product designation: **22L 30:1 KP1 SB 6x2 150 KWS1**

Option	Type	Description
KL1	Gearhead ambient conditions	Low temperature range of -55°C +100°C
KL2	Gearhead ambient conditions	Vacuum down to 10^{-5} Pa @22°C
KL3	Gearhead ambient conditions	Temperature range of -55°C +150°C and vacuum down to 10^{-9} Pa @60°C
KP1	Gearhead protection	IP54
KC1	Cable orientation	Motor cable/wires or terminals oriented at 15° CCW vs gearhead front threads
KC2	Cable orientation	Motor cable/wires or terminals oriented at 30° CCW vs gearhead front threads
KC3	Cable orientation	Motor cable/wires or terminals oriented at 45° CCW vs gearhead front threads
150	Screw	Standard length (150 mm), length from 45 mm up to 200 mm are available with 5 mm steps
KWL1	Screw ambient conditions	Low temperature range of -55°C +100°C
KWL2	Screw ambient conditions	Vacuum down to 10^{-5} Pa @22°C
KWL3	Screw ambient conditions	Temperature range of -55°C +150°C and vacuum down to 10^{-9} Pa @60°C
KWS1	Screw	Bearing tip/journal (Ø 4mm, L=5mm)
KWN7	Nut	Flanged metal nut

Note: Specified values may differ from the standard values depending on the option. Please consult your sales representative for further information.

Product combination

Number of gear stages		1	2	3	4
L2 [mm] = length without motor		30,9	37,2	43,5	49,9
L1 [mm] = length with motor	2237U...CXR	70,7	77,0	83,3	89,7
	2342X...CR	74,6	80,9	87,2	93,6
	2642X...CR/CXR	78,0	84,3	90,6	97,0
	2657X...CR/CXR	93,0	99,3	105,6	112,0
	2668X...CR	104,0	110,3	116,6	123,0
	2232X...BX4	66,4	72,7	79,0	85,4
	2250X...BX4	84,4	90,7	97,0	103,4
	2264X...BP4	100,0	106,3	112,6	119,0
	2214X...BXTH	47,4	53,7	60,0	66,4
	2214X...BXTR	46,6	52,9	59,2	65,6
	3216X...BXTH	52,8	59,1	65,4	71,8
	3216X...BXTR	52,0	58,3	64,6	71,0
	2036U...B	69,6	75,9	82,2	88,6
	2057X...B	89,6	95,9	102,2	108,6
	2444X...B	76,6	82,9	89,2	95,6
	AM2224...10	61,4	67,7	74,0	80,4

© DR. FRITZ FAULHABER GMBH & CO. KG
Specifications subject to change without notice.

NEW

FAULHABER

Linear Actuators

580 N

Gearhead with integrated Ball Screw, high accuracy grade

For combination with
DC-Micromotors
Brushless DC-Motors
Stepper Motors

Series 22L ... PB

Values at 22°C							
Number of gear stages		**1**	**1**	**2**	**2**	**3**	**4**
Reduction ratio [1] (rounded)		**1:1**	**3:1** **3,6:1** **4,5:1** **6,6:1**	**9:1**	**11:1** **14:1** **16:1** **20:1** **24:1** **30:1** **44:1**	**41:1** **49:1** **59:1** **72:1** **89:1** **108:1** **131:1** **158:1** **196:1**	**178:1** **215:1** **267:1** **323:1** **401:1** **474:1** **588:1** **711:1** **862:1** **1 042:1** **1 294:1**
Continuous output speed, max. [2]	mm/s	120	100…45,4	37	36,8…9,18	12,4…2,55	2,81…0,39
Peak output speed, max. [2]	mm/s	150	122…55,6	44,4	46…11,5	16,5…3,4	3,7…0,5
Continuous input speed, max.	min^{-1}	3 600	9 000	10 000	12 000	15 000	15 000
Peak input speed, max.	min^{-1}	4 500	11 000	12 000	15 000	20 000	20 000
Continuous axial force, avg.	N	84	90…117	125	126…200	181…305	295…572
Peak axial force, dynamic, max.	N	580	580	580	580	580	580
Peak axial force, static, max.	N	670	670	670	670	670	670
Output power, max.	W	27	27	16	16	9	2
Efficiency of gearhead/coupler, max.	%	95	92	82	82	82	65
Efficiency of screw, max.	%	90	90	90	90	90	90
Mass inertia incl. screw, max. [3]	gmm^2	648	106	81	81	33	14
Accuracy, screw standard length, max.	µm	13	15	15	15	15	15
Radial load, max. (15 mm from flange)	N	90	105	135	135	180	205
Gearhead backlash, at no-load, typical	°	0,33	0,8	0,8	0,8	0,8	0,8
Radial play (screw, 10 mm from flange)	mm	≤ 0,05	≤ 0,05	≤ 0,05	≤ 0,05	≤ 0,05	≤ 0,05
Axial play:							
– screw	mm	= 0	= 0	= 0	= 0	= 0	= 0
– nut	µm	5	5	5	5	5	5
Screw length from flange:							
– standard	mm	150	150	150	150	150	150
– max.	mm	200	200	200	200	200	200
Length without motor L2	mm	30,9	30,9	37,2	37,2	43,5	49,9
Mass [3]	g	107	111	126	126	142	157

Screw type		6x2 IT1 - right handed, screw direction of rotation same as motor shaft.
Screw material		stainless steel
Nut material		cylindric, metal
Housing material		stainless steel
Geartrain material		stainless steel
Bearings on output shaft		ball bearings, preloaded
Operating temperature range	°C	-20 … +80

[1] The reduction ratios are rounded, the exact values are available on request or at www.faulhaber.com.
[2] According to selected reduction ratio, screw supported
[3] Standard length and standard nut

Note:

The display shows the range of possible operation points of the drives at a given ambient temperature of 22°C.

The diagram indicates the recommended output speed in relation to the available output axial force.

For the stardard screw both supported and not, the diagram shows also the critical speeds and the buckling forces.

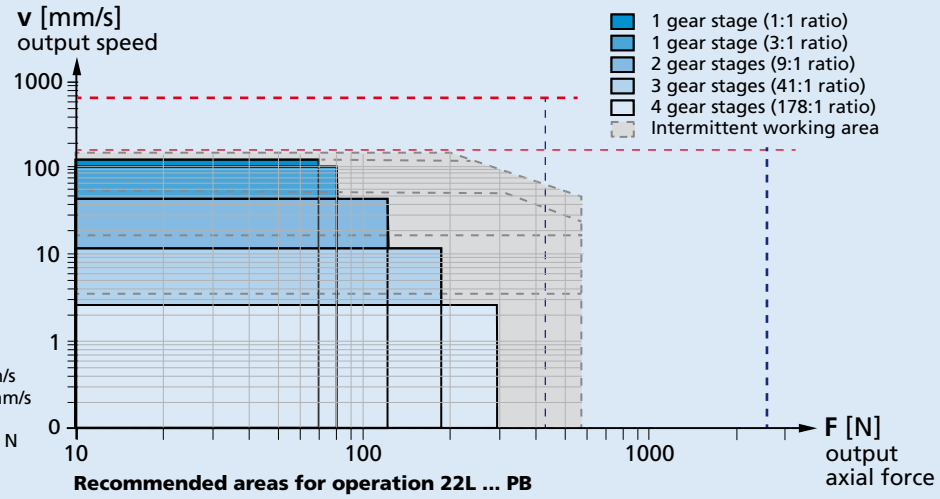

Recommended areas for operation 22L ... PB

For notes on technical data and lifetime performance refer to "Technical Information".

© DR. FRITZ FAULHABER GMBH & CO. KG
Specifications subject to change without notice.

Dimensional drawing

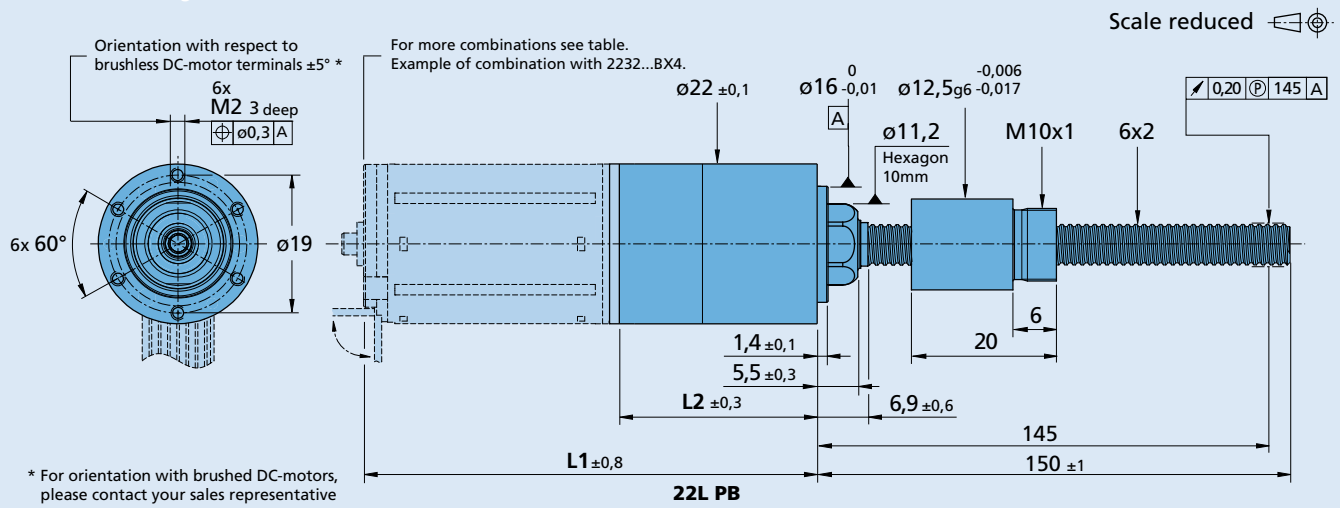

Options

Example product designation: **22L 30:1 KP1 PB 6x2 150 KWS1**

Option	Type	Description
KL1	Gearhead ambient conditions	Low temperature range of -55°C +100°C
KL2	Gearhead ambient conditions	Vacuum down to 10^{-5} Pa @22°C
KL3	Gearhead ambient conditions	Temperature range of -55°C +150°C and vacuum down to 10^{-9} Pa @60°C
KP1	Gearhead protection	IP54
KC1	Cable orientation	Motor cable/wires or terminals oriented at 15° CCW vs gearhead front threads
KC2	Cable orientation	Motor cable/wires or terminals oriented at 30° CCW vs gearhead front threads
KC3	Cable orientation	Motor cable/wires or terminals oriented at 45° CCW vs gearhead front threads
150	Screw	Standard length (150 mm), length from 45 mm up to 200 mm are available with 5 mm steps
KWL1	Screw ambient conditions	Low temperature range of -55°C +100°C
KWL2	Screw ambient conditions	Vacuum down to 10^{-5} Pa @22°C
KWL3	Screw ambient conditions	Temperature range of -55°C +150°C and vacuum down to 10^{-9} Pa @60°C
KWS1	Screw	Bearing tip/journal (Ø 4mm, L=5mm)
KWN7	Nut	Flanged metal nut

Note: Specified values may differ from the standard values depending on the option. Please consult your sales representative for further information.

Product combination

Number of gear stages		1	2	3	4
L2 [mm] = length without motor		30,9	37,2	43,5	49,9
L1 [mm] = length with motor	2237U...CXR	70,7	77,0	83,3	89,7
	2342X...CR	74,6	80,9	87,2	93,6
	2642X...CR/CXR	78,0	84,3	90,6	97,0
	2657X...CR/CXR	93,0	99,3	105,6	112,0
	2668X...CR	104,0	110,3	116,6	123,0
	2232X...BX4	66,4	72,7	79,0	85,4
	2250X...BX4	84,4	90,7	97,0	103,4
	2264X...BP4	100,0	106,3	112,6	119,0
	2214X...BXTH	47,4	53,7	60,0	66,4
	2214X...BXTR	46,6	52,9	59,2	65,6
	3216X...BXTH	52,8	59,1	65,4	71,8
	3216X...BXTR	52,0	58,3	64,6	71,0
	2036U...B	69,6	75,9	82,2	88,6
	2057X...B	89,6	95,9	102,2	108,6
	2444X...B	76,6	82,9	89,2	95,6
	AM2224...10	61,4	67,7	74,0	80,4

© DR. FRITZ FAULHABER GMBH & CO. KG
Specifications subject to change without notice.

NEW

FAULHABER

Linear Actuators

Gearhead with integrated Lead Screw, trapezoidal thread

1800 N

For combination with
DC-Micromotors
Brushless DC-Motors
Stepper Motors

Series 32L ... TL

Values at 22°C

Number of gear stages		**1**	**1**	**1**	**2**	**2**	**3**	**4**
Reduction ratio [1] (rounded)		**1:1**	**3:1**	**3,6:1** **4,5:1** **6,6:1**	**9:1** **11:1**	**14:1** **16:1** **20:1** **24:1** **30:1** **44:1**	**41:1** **49:1** **59:1** **72:1** **89:1** **108:1** **131:1** **158:1** **196:1**	**178:1** **215:1** **267:1** **323:1** **401:1** **474:1** **588:1** **711:1** **862:1** **1 042:1** **1 294:1**
Continuous output speed, max. [2]	mm/s	66,7	63,3	60,2…40,4	24,1…19,7	23,8…7,58	8,94…1,87	2,06…0,28
Peak output speed, max. [2]	mm/s	167	83,3	88…48	27,8…22,7	29,8…9,47	11,4…2,38	2,62…0,36
Continuous input speed, max.	min^{-1}	2 000	5 700	6 500	6 500	10 000	11 000	11 000
Peak input speed, max.	min^{-1}	5 000	7 500	9 500	7 500	12 500	14 000	14 000
Continuous axial force, avg.	N	103	108	114…170	286…348	287…910	760…1 800	1 800
Peak axial force, dynamic, max.	N	955	955	1 800	1 800	1 800	1 800	1 800
Peak axial force, static, max.	N	3 600	3 600	3 600	3 600	3 600	3 600	3 600
Output power, max.	W	17	17	17	9	9	6	5
Efficiency of gearhead/coupler, max.	%	95	92	92	82	82	78	65
Efficiency of screw, max.	%	30	30	30	30	30	30	30
Mass inertia incl. screw, max. [3]	gmm^2	3 760	630	630	463	463	199	85
Accuracy, screw standard length, max.	µm	139	140	140	140	140	140	140
Radial load, max. (15 mm from flange)	N	185	220	220	280	280	330	380
Gearhead backlash, at no-load, typical	°	0,31	0,6	0,6	0,6	0,6	0,6	0,6
Radial play (screw, 10 mm from flange)	mm	≤ 0,05	≤ 0,05	≤ 0,05	≤ 0,05	≤ 0,05	≤ 0,05	≤ 0,05
Axial play:								
– screw	mm	= 0	= 0	= 0	= 0	= 0	= 0	= 0
– nut	µm	114	114	114	114	114	114	114
Screw length from flange:								
– standard	mm	200	200	200	200	200	200	200
– max.	mm	450	450	450	450	450	450	450
Length without motor L2	mm	40,7	40,7	40,7	49,1	49,1	57,5	65,9
Mass [3]	g	207	220	220	280	280	340	400

Screw type		Tr10x2 right handed, screw direction of rotation same as motor shaft.
Screw material		stainless steel
Nut material		cylindric, lead-free brass
Housing material		stainless steel
Geartrain material		stainless steel
Bearings on output shaft		ball bearings, preloaded
Operating temperature range	°C	-30 … +120

[1] The reduction ratios are rounded, the exact values are available on request or at www.faulhaber.com.
[2] According to selected reduction ratio, screw supported
[3] Standard length and standard nut

Note:

The display shows the range of possible operation points of the drives at a given ambient temperature of 22°C.

The diagram indicates the recommended output speed in relation to the available output axial force.

For the stardard screw both supported and not, the diagram shows also the critical speeds and the buckling forces.

- Critical speed [3] (fixed-free), 134 mm/s
- Critical speed [3] (fixed-single), 594 mm/s
- Buckling force [3] (fixed-free), 989 N
- Buckling force [3] (fixed-single), 7910 N

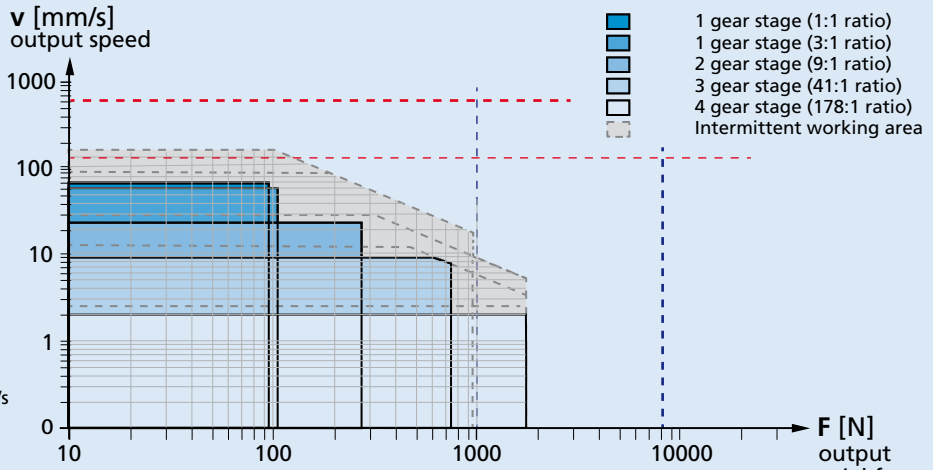

Recommended areas for operation 32L ... TL

For notes on technical data and lifetime performance refer to "Technical Information".

Edition 2024 Mar. 08

Backwards

© DR. FRITZ FAULHABER GMBH & CO. KG
Specifications subject to change without notice.

www.faulhaber.com

Dimensional drawing

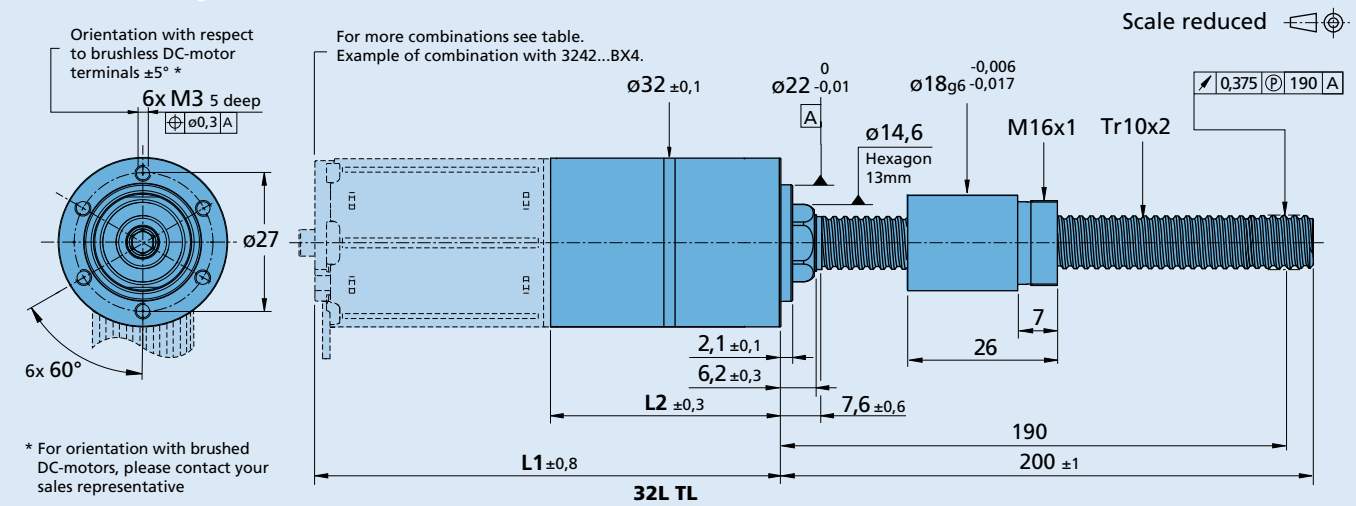

Options

Example product designation: **32L 30:1 KP1 TL 10x2 200 KWS1**

Option	Type	Description
KL1	Gearhead ambient conditions	Low temperature range of -55°C +100°C
KL2	Gearhead ambient conditions	Vacuum down to 10^{-5} Pa @22°C
KL3	Gearhead ambient conditions	Temperature range of -55°C +150°C and vacuum down to 10^{-9} Pa @60°C
KP1	Gearhead protection	IP54
KC1	Cable orientation	Motor cable/wires or terminals oriented at 15° CCW vs gearhead front threads
KC2	Cable orientation	Motor cable/wires or terminals oriented at 30° CCW vs gearhead front threads
KC3	Cable orientation	Motor cable/wires or terminals oriented at 45° CCW vs gearhead front threads
200	Screw	Standard length (200 mm), length from 50 mm up to 450 mm are available with 5 mm steps
KWS1	Screw	Bearing tip/journal (Ø 6mm, L=10mm)
KWL0	Screw ambient conditions	Not lubricated
KWL2	Screw ambient conditions	Vacuum down to 10^{-5} Pa @22°C
KWL3	Screw ambient conditions	Temperature range of -55°C +150°C and vacuum down to 10^{-9} Pa @60°C
KWN2	Nut	Cylindrical plastic nut with double 8 mm flats
KWN3	Nut	Flanged lead-free brass nut
KWN4	Nut	Flanged plastic nut
KWN5	Nut	No backlash lead-free brass nut
KWN8	Nut	Cylindrical lead-free brass nut with double 8 mm flats
KWN9	Nut	No nut

Note: Specified values may differ from the standard values depending on the option. Please consult your sales representative for further information.

Product combination

Number of gear stages		1	2	3	4
L2 [mm] = length without motor		40,7	49,1	57,5	65,9
L1 [mm] = length with motor	2642X...CR/CXR	85,6	94,0	102,4	110,8
	2657X...CR/CXR	100,6	109,0	117,4	125,8
	2668X...CR	111,6	120,0	128,4	136,8
	3242X...CR	85,6	94,0	102,4	110,8
	3257X...CR	100,6	109,0	117,4	125,8
	3272X...CR	115,6	124,0	132,4	140,8
	2250X...BX4	95,4	103,8	112,2	120,6
	3242X...BX4	87,8	96,2	104,6	113,0
	3268X...BX4	113,8	122,2	130,6	139,0
	2264X...BP4	107,6	116,0	124,4	132,8
	3274X...BP4	121,7	130,1	138,5	146,9
	3056X...B	99,6	108,0	116,4	124,8
	3564X...B	107,6	116,0	124,4	132,8
	3216X...BXTR	59,6	68,0	76,4	84,8
	3216X...BXTH	60,4	68,8	77,2	85,6
	AM3248...10	85,6	94,0	102,4	110,8

© DR. FRITZ FAULHABER GMBH & CO. KG
Specifications subject to change without notice.

NEW

FAULHABER

Linear Actuators

1850 N

Gearhead with integrated Lead Screw, metric thread

For combination with
DC-Micromotors
Brushless DC-Motors
Stepper Motors

Series 32L ... ML

Values at 22°C

Number of gear stages		**1**	**1**	**1**	**2**	**2**	**3**	**4**
Reduction ratio [1] (rounded)		**1:1**	**3:1**	**3,6:1** **4,5:1** **6,6:1**	**9:1** **11:1**	**14:1** **16:1** **20:1** **24:1** **30:1** **44:1**	**41:1** **49:1** **59:1** **72:1** **89:1** **108:1** **131:1** **158:1** **196:1**	**178:1** **215:1** **267:1** **323:1** **401:1** **474:1** **588:1** **711:1** **862:1** **1 042:1** **1 294:1**
Continuous output speed, max. [2]	mm/s	33,5	31,6	29,6…20,2	12…9,85	11,9…3,79	4,47…0,94	1,03…0,14
Peak output speed, max. [2]	mm/s	83,3	41,7	44…24	13,9…11,4	14,9…4,73	5,69…1,19	1,31…0,18
Continuous input speed, max.	min^{-1}	2 000	5 700	6 400	6 500	10 000	11 000	11 000
Peak input speed, max.	min^{-1}	5 000	7 500	9 500	7 500	12 500	14 000	14 000
Continuous axial force, avg.	N	54	57	60…89	150…180	150…478	402…1850	1750…1850
Peak axial force, dynamic, max.	N	1 000	1 000	1 850	1 850	1 850	1 850	1 850
Peak axial force, static, max.	N	3 700	3 700	3 700	3 700	3 700	3 700	3 700
Output power, max.	W	9	9	9	5	5	3	2
Efficiency of gearhead/coupler, max.	%	95	92	92	82	82	78	65
Efficiency of screw, max.	%	16	16	16	16	16	16	16
Mass inertia incl. screw, max. [3]	gmm^2	3 760	630	630	463	463	199	85
Accuracy, screw standard length, max.	µm	171	172	172	172	172	172	172
Radial load, max. (15 mm from flange)	N	185	220	220	280	280	330	380
Gearhead backlash, at no-load, typical	°	0,31	0,6	0,6	0,6	0,6	0,6	0,6
Radial play (screw, 10 mm from flange)	mm	≤ 0,05	≤ 0,05	≤ 0,05	≤ 0,05	≤ 0,05	≤ 0,05	≤ 0,05
Axial play:								
– screw	mm	= 0	= 0	= 0	= 0	= 0	= 0	= 0
– nut	µm	144	144	144	144	144	144	144
Screw length from flange:								
– standard	mm	200	200	200	200	200	200	200
– max.	mm	450	450	450	450	450	450	450
Length without motor L2	mm	40,7	40,7	40,7	49,1	49,1	57,5	65,9
Mass [3]	g	207	220	220	280	280	340	400

Screw type		M10x1 right handed, screw direction of rotation same as motor shaft.
Screw material		stainless steel
Nut material		cylindric, lead-free brass
Housing material		stainless steel
Geartrain material		stainless steel
Bearings on output shaft		ball bearings, preloaded
Operating temperature range	°C	-30 … +120

[1] The reduction ratios are rounded, the exact values are available on request or at www.faulhaber.com.
[2] According to selected reduction ratio, screw supported
[3] Standard length and standard nut

Note:

The display shows the range of possible operation points of the drives at a given ambient temperature of 22°C.

The diagram indicates the recommended output speed in relation to the available output axial force.

For the stardard screw both supported and not, the diagram shows also the critical speeds and the buckling forces.

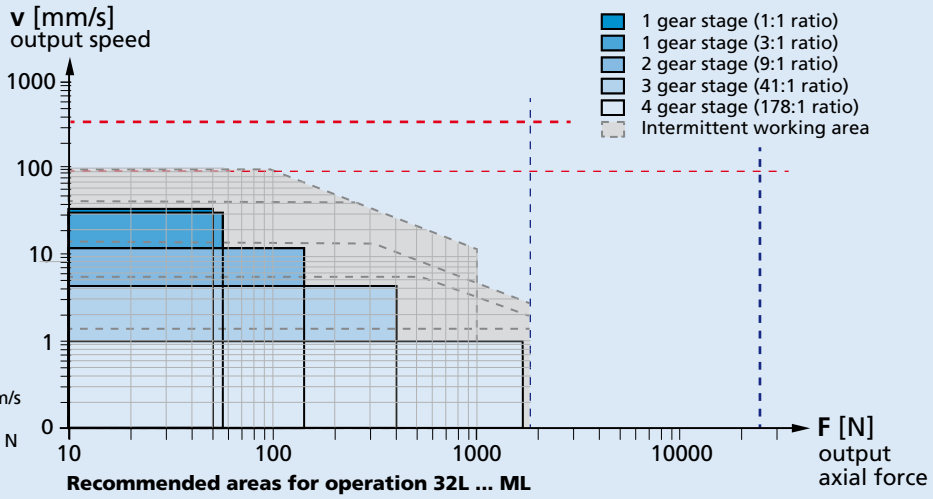

Recommended areas for operation 32L ... ML

For notes on technical data and lifetime performance refer to "Technical Information".

© DR. FRITZ FAULHABER GMBH & CO. KG
Specifications subject to change without notice.

Dimensional drawing

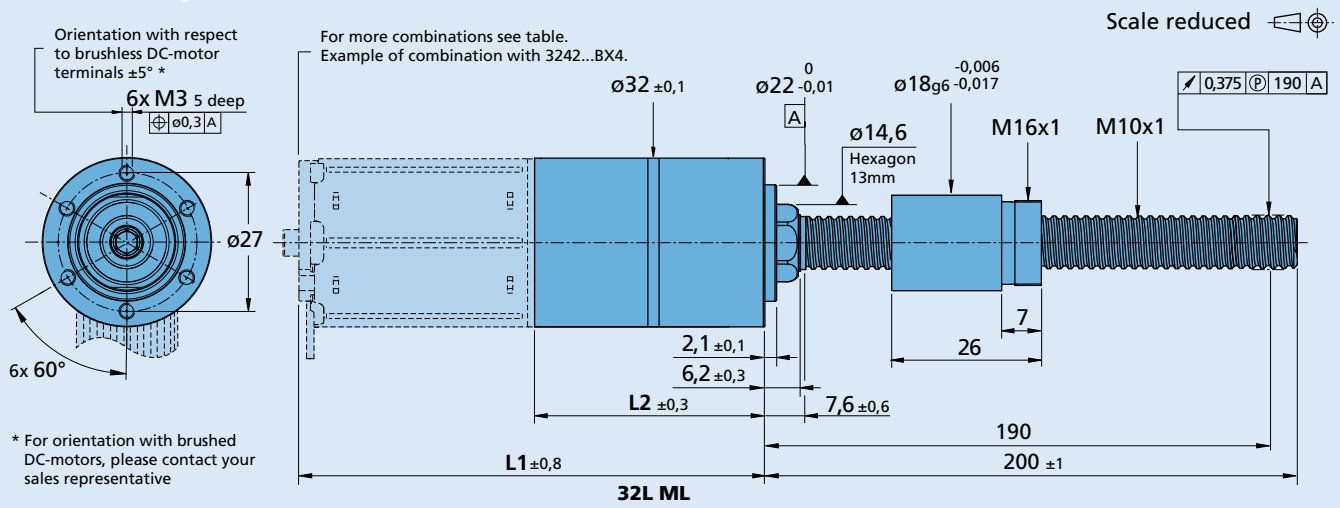

Options

Example product designation: **32L 30:1 KP1 ML 10x1 200 KWS1**

Option	Type	Description
KL1	Gearhead ambient conditions	Low temperature range of -55°C +100°C
KL2	Gearhead ambient conditions	Vacuum down to 10^{-5} Pa @22°C
KL3	Gearhead ambient conditions	Temperature range of -55°C +150°C and vacuum down to 10^{-9} Pa @60°C
KP1	Gearhead protection	IP54
KC1	Cable orientation	Motor cable/wires or terminals oriented at 15° CCW vs gearhead front threads
KC2	Cable orientation	Motor cable/wires or terminals oriented at 30° CCW vs gearhead front threads
KC3	Cable orientation	Motor cable/wires or terminals oriented at 45° CCW vs gearhead front threads
200	Screw	Standard length (200 mm), length from 50 mm up to 450 mm are available with 5 mm steps
KWS1	Screw	Bearing tip/journal (Ø 6mm, L=10mm)
KWL0	Screw ambient conditions	Not lubricated
KWL2	Screw ambient conditions	Vacuum down to 10^{-5} Pa @22°C
KWL3	Screw ambient conditions	Temperature range of -55°C +150°C and vacuum down to 10^{-9} Pa @60°C
KWN2	Nut	Cylindrical plastic nut with double 8 mm flats
KWN3	Nut	Flanged lead-free brass nut
KWN4	Nut	Flanged plastic nut
KWN5	Nut	No backlash lead-free brass nut
KWN8	Nut	Cylindrical lead-free brass nut with double 8 mm flats
KWN9	Nut	No nut

Note: Specified values may differ from the standard values depending on the option. Please consult your sales representative for further information.

Product combination

Number of gear stages		1	2	3	4
L2 [mm] = length without motor		40,7	49,1	57,5	65,9
L1 [mm] = length with motor	2642X...CR/CXR	85,6	94,0	102,4	110,8
	2657X...CR/CXR	100,6	109,0	117,4	125,8
	2668X...CR	111,6	120,0	128,4	136,8
	3242X...CR	85,6	94,0	102,4	110,8
	3257X...CR	100,6	109,0	117,4	125,8
	3272X...CR	115,6	124,0	132,4	140,8
	2250X...BX4	95,4	103,8	112,2	120,6
	3242X...BX4	87,8	96,2	104,6	113,0
	3268X...BX4	113,8	122,2	130,6	139,0
	2264X...BP4	107,6	116,0	124,4	132,8
	3274X...BP4	121,7	130,1	138,5	146,9
	3056X...B	99,6	108,0	116,4	124,8
	3564X...B	107,6	116,0	124,4	132,8
	3216X...BXTR	59,6	68,0	76,4	84,8
	3216X...BXTH	60,4	68,8	77,2	85,6
	AM3248...10	85,6	94,0	102,4	110,8

© DR. FRITZ FAULHABER GMBH & CO. KG
Specifications subject to change without notice.

NEW

FAULHABER

Linear Actuators

1920 N

Gearhead with integrated Ball Screw, standard version

For combination with
DC-Micromotors
Brushless DC-Motors
Stepper Motors

Series 32L ... SB

Values at 22°C

Number of gear stages		**1**	**1**	**1**	**2**	**2**	**3**	**4**
Reduction ratio [1] (rounded)		**1:1**	**3:1**	**3,6:1** **4,5:1** **6,6:1**	**9:1** **11:1**	**14:1** **16:1** **20:1** **24:1** **30:1** **44:1**	**41:1** **49:1** **59:1** **72:1** **89:1** **108:1** **131:1** **158:1** **196:1**	**178:1** **215:1** **267:1** **323:1** **401:1** **474:1** **588:1** **711:1** **862:1** **1 042:1** **1 294:1**
Continuous output speed, max. [2]	mm/s	107	72,2	74,1…40,4	24,1…19,7	23,8…7,58	8,94…1,87	2,06…0,28
Peak output speed, max. [2]	mm/s	133	83,3	88…48	27,8…22,7	29,8…9,47	11,4…2,38	2,62…0,36
Continuous input speed, max.	min^{-1}	3 200	6 500	8 000	6 500	10 000	11 000	11 000
Peak input speed, max.	min^{-1}	4 000	7 500	9 500	7 500	12 500	14 000	14 000
Continuous axial force, avg.	N	291	331	328…402	478…511	479…702	664…1120	1084…1920
Peak axial force, dynamic, max.	N	1 920	1 920	1 920	1 920	1 920	1 920	1 920
Peak axial force, static, max.	N	2 360	2 360	2 360	2 360	2 360	2 360	2 360
Output power, max.	W	50	50	50	27	27	18	5
Efficiency of gearhead/coupler, max.	%	95	92	92	82	82	78	65
Efficiency of screw, max.	%	90	90	90	90	90	90	90
Mass inertia incl. screw, max. [3]	gmm^2	3 760	630	630	463	463	199	85
Accuracy, screw standard length, max.	µm	24	25	25	25	25	25	25
Radial load, max. (15 mm from flange)	N	185	220	220	280	280	330	380
Gearhead backlash, at no-load, typical	°	0,31	0,6	0,6	0,6	0,6	0,6	0,6
Radial play (screw, 10 mm from flange)	mm	≤ 0,05	≤ 0,05	≤ 0,05	≤ 0,05	≤ 0,05	≤ 0,05	≤ 0,05
Axial play:								
– screw	mm	= 0	= 0	= 0	= 0	= 0	= 0	= 0
– nut	µm	10	10	10	10	10	10	10
Screw length from flange:								
– standard	mm	200	200	200	200	200	200	200
– max.	mm	450	450	450	450	450	450	450
Length without motor L2	mm	40,7	40,7	40,7	49,1	49,1	57,5	65,9
Mass [3]	g	207	220	220	280	280	340	400

Screw type		10x2 IT3 - right handed, screw direction of rotation same as motor shaft.
Screw material		stainless steel
Nut material		cylindric, metal
Housing material		stainless steel
Geartrain material		stainless steel
Bearings on output shaft		ball bearings, preloaded
Operating temperature range	°C	-20 … +80

[1] The reduction ratios are rounded, the exact values are available on request or at www.faulhaber.com.
[2] According to selected reduction ratio, screw supported
[3] Standard length and standard nut

Note:

The display shows the range of possible operation points of the drives at a given ambient temperature of 22°C.

The diagram indicates the recommended output speed in relation to the available output axial force.

For the stardard screw both supported and not, the diagram shows also the critical speeds and the buckling forces.

- Critical speed [3] (fixed-free), 156 mm/s
- Critical speed [3] (fixed-single), 689 mm/s
- Buckling force [3] (fixed-free), 1790 N
- Buckling force [3] (fixed-single), 14300 N

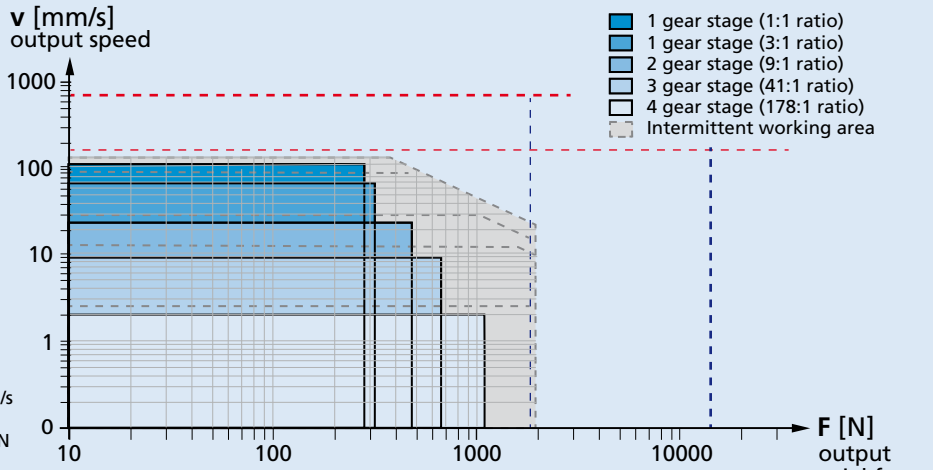

Recommended areas for operation 32L ... SB

For notes on technical data and lifetime performance refer to "Technical Information".

Backwards

© DR. FRITZ FAULHABER GMBH & CO. KG
Specifications subject to change without notice.

Dimensional drawing

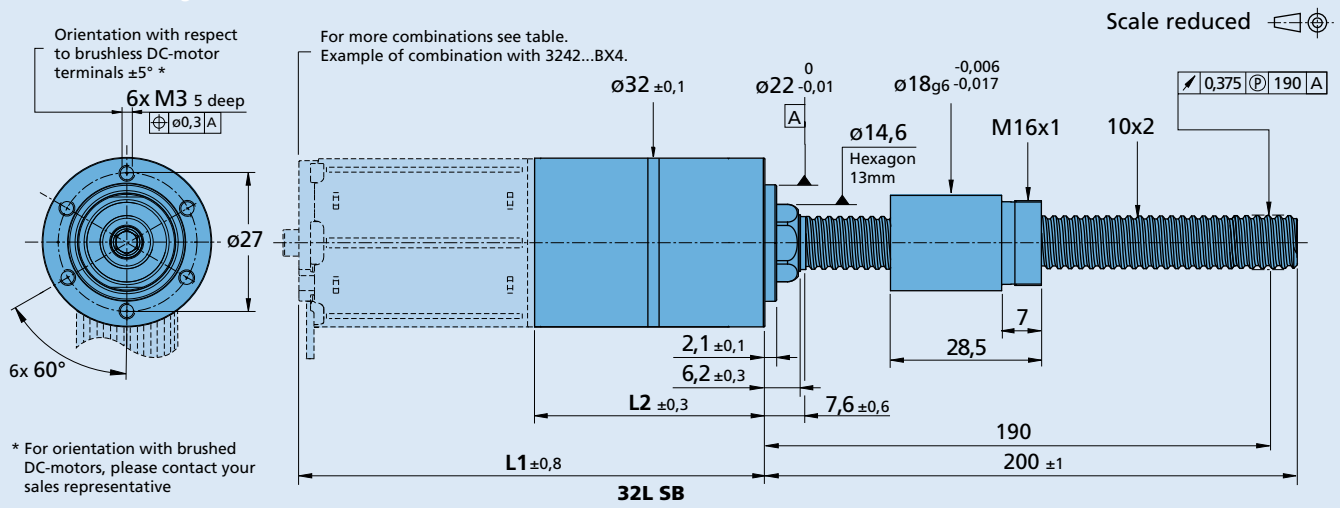

Options

Example product designation: **32L 30:1 KP1 SB 10x2 200 KWS1**

Option	Type	Description
KL1	Gearhead ambient conditions	Low temperature range of -55°C +100°C
KL2	Gearhead ambient conditions	Vacuum down to 10^{-5} Pa @22°C
KL3	Gearhead ambient conditions	Temperature range of -55°C +150°C and vacuum down to 10^{-9} Pa @60°C
KP1	Gearhead protection	IP54
KC1	Cable orientation	Motor cable/wires or terminals oriented at 15° CCW vs gearhead front threads
KC2	Cable orientation	Motor cable/wires or terminals oriented at 30° CCW vs gearhead front threads
KC3	Cable orientation	Motor cable/wires or terminals oriented at 45° CCW vs gearhead front threads
200	Screw	Standard length (200 mm), length from 50 mm up to 450 mm are available with 5 mm steps
KWL1	Screw ambient conditions	Low temperature range of -55°C +100°C
KWL2	Screw ambient conditions	Vacuum down to 10^{-5} Pa @22°C
KWL3	Screw ambient conditions	Temperature range of -55°C +150°C and vacuum down to 10^{-9} Pa @60°C
KWS1	Screw	Bearing tip/journal (Ø 6mm, L=10mm)
KWN7	Nut	Flanged metal nut

Note: Specified values may differ from the standard values depending on the option. Please consult your sales representative for further information.

Product combination

Number of gear stages		1	2	3	4
L2 [mm] = length without motor		40,7	49,1	57,5	65,9
L1 [mm] = length with motor	2642X...CR/CXR	85,6	94,0	102,4	110,8
	2657X...CR/CXR	100,6	109,0	117,4	125,8
	2668X...CR	111,6	120,0	128,4	136,8
	3242X...CR	85,6	94,0	102,4	110,8
	3257X...CR	100,6	109,0	117,4	125,8
	3272X...CR	115,6	124,0	132,4	140,8
	2250X...BX4	95,4	103,8	112,2	120,6
	3242X...BX4	87,8	96,2	104,6	113,0
	3268X...BX4	113,8	122,2	130,6	139,0
	2264X...BP4	107,6	116,0	124,4	132,8
	3274X...BP4	121,7	130,1	138,5	146,9
	3056X...B	99,6	108,0	116,4	124,8
	3564X...B	107,6	116,0	124,4	132,8
	3216X...BXTR	59,6	68,0	76,4	84,8
	3216X...BXTH	60,4	68,8	77,2	85,6
	AM3248...10	85,6	94,0	102,4	110,8

© DR. FRITZ FAULHABER GMBH & CO. KG
Specifications subject to change without notice.

NEW

FAULHABER

Linear Actuators

1920 N

Gearhead with integrated Ball Screw, high accuracy grade

For combination with
DC-Micromotors
Brushless DC-Motors
Stepper Motors

Series 32L ... PB

Values at 22°C

Number of gear stages		**1**	**1**	**1**	**2**	**2**	**3**	**4**
Reduction ratio [1] (rounded)		**1:1**	**3:1**	**3,6:1** **4,5:1** **6,6:1**	**9:1** **11:1**	**14:1** **16:1** **20:1** **24:1** **30:1** **44:1**	**41:1** **49:1** **59:1** **72:1** **89:1** **108:1** **131:1** **158:1** **196:1**	**178:1** **215:1** **267:1** **323:1** **401:1** **474:1** **588:1** **711:1** **862:1** **1 042:1** **1 294:1**
Continuous output speed, max. [2]	mm/s	107	72,2	74,1…40,4	24,1…19,7	23,8…7,58	8,94…1,87	2,06…0,28
Peak output speed, max. [2]	mm/s	133	83,3	88…48	27,8…22,7	29,8…9,47	11,4…2,38	2,62…0,36
Continuous input speed, max.	min^{-1}	3 200	6 500	8 000	6 500	10 000	11 000	11 000
Peak input speed, max.	min^{-1}	4 000	7 500	9 500	7 500	12 500	14 000	14 000
Continuous axial force, avg.	N	291	331	328…402	478…511	479…702	664…1120	1084…1920
Peak axial force, dynamic, max.	N	1 920	1 920	1 920	1 920	1 920	1 920	1 920
Peak axial force, static, max.	N	2 360	2 360	2 360	2 360	2 360	2 360	2 360
Output power, max.	W	50	50	50	27	27	18	5
Efficiency of gearhead/coupler, max.	%	95	92	92	82	82	78	65
Efficiency of screw, max.	%	90	90	90	90	90	90	90
Mass inertia incl. screw, max. [3]	gmm^2	3 760	630	630	463	463	199	85
Accuracy, screw standard length, max.	µm	13	14	14	14	14	14	14
Radial load, max. (15 mm from flange)	N	185	220	220	280	280	330	380
Gearhead backlash, at no-load, typical	°	0,31	0,6	0,6	0,6	0,6	0,6	0,6
Radial play (screw, 10 mm from flange)	mm	≤ 0,05	≤ 0,05	≤ 0,05	≤ 0,05	≤ 0,05	≤ 0,05	≤ 0,05
Axial play:								
– screw	mm	= 0	= 0	= 0	= 0	= 0	= 0	= 0
– nut	µm	5	5	5	5	5	5	5
Screw length from flange:								
– standard	mm	200	200	200	200	200	200	200
– max.	mm	450	450	450	450	450	450	450
Length without motor L2	mm	40,7	40,7	40,7	49,1	49,1	57,5	65,9
Mass [3]	g	207	220	220	280	280	340	400

Screw type		10x2 IT1 - right handed, screw direction of rotation same as motor shaft.
Screw material		stainless steel
Nut material		cylindric, metal
Housing material		stainless steel
Geartrain material		stainless steel
Bearings on output shaft		ball bearings, preloaded
Operating temperature range	°C	-20 … +80

[1] The reduction ratios are rounded, the exact values are available on request or at www.faulhaber.com.
[2] According to selected reduction ratio, screw supported
[3] Standard length and standard nut

Note:

The display shows the range of possible operation points of the drives at a given ambient temperature of 22°C.

The diagram indicates the recommended output speed in relation to the available output axial force.

For the stardard screw both supported and not, the diagram shows also the critical speeds and the buckling forces.

- Critical speed [3] (fixed-free), 156 mm/s
- Critical speed [3] (fixed-single), 689 mm/s
- Buckling force [3] (fixed-free), 1790 N
- Buckling force [3] (fixed-single), 14300 N

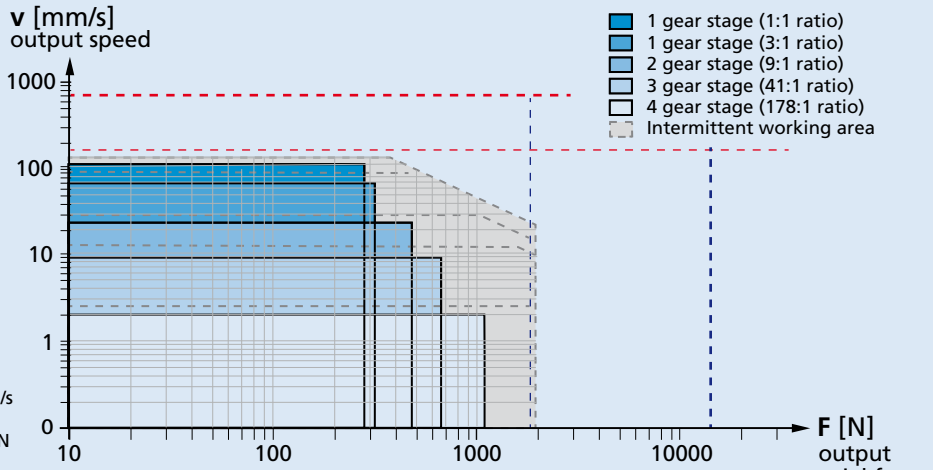

Recommended areas for operation 32L ... PB

For notes on technical data and lifetime performance refer to "Technical Information".

© DR. FRITZ FAULHABER GMBH & CO. KG
Specifications subject to change without notice.

Dimensional drawing

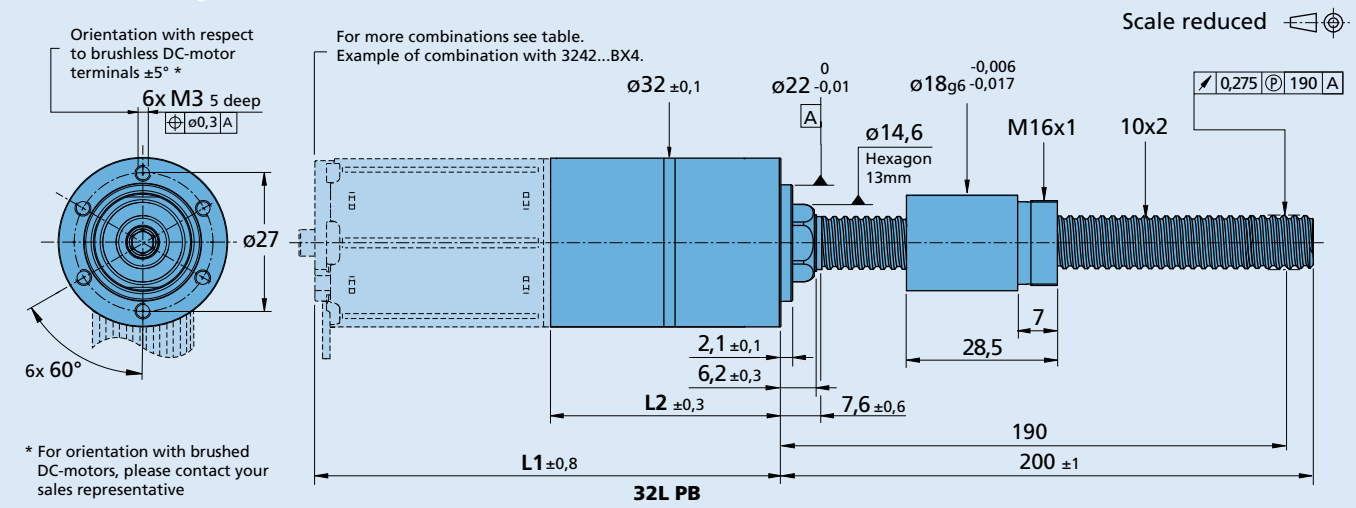

Options

Example product designation: **32L 30:1 KP1 PB 10x2 200 KWS1**

Option	Type	Description
KL1	Gearhead ambient conditions	Low temperature range of -55°C +100°C
KL2	Gearhead ambient conditions	Vacuum down to 10^{-5} Pa @22°C
KL3	Gearhead ambient conditions	Temperature range of -55°C +150°C and vacuum down to 10^{-9} Pa @60°C
KP1	Gearhead protection	IP54
KC1	Cable orientation	Motor cable/wires or terminals oriented at 15° CCW vs gearhead front threads
KC2	Cable orientation	Motor cable/wires or terminals oriented at 30° CCW vs gearhead front threads
KC3	Cable orientation	Motor cable/wires or terminals oriented at 45° CCW vs gearhead front threads
200	Screw	Standard length (200 mm), length from 50 mm up to 450 mm are available with 5 mm steps
KWL1	Screw ambient conditions	Low temperature range of -55°C +100°C
KWL2	Screw ambient conditions	Vacuum down to 10^{-5} Pa @22°C
KWL3	Screw ambient conditions	Temperature range of -55°C +150°C and vacuum down to 10^{-9} Pa @60°C
KWS1	Screw	Bearing tip/journal (Ø 6mm, L=10mm)
KWN7	Nut	Flanged metal nut

Note: Specified values may differ from the standard values depending on the option. Please consult your sales representative for further information.

Product combination

Number of gear stages		1	2	3	4
L2 [mm] = length without motor		40,7	49,1	57,5	65,9
L1 [mm] = length with motor	2642X...CR/CXR	85,6	94,0	102,4	110,8
	2657X...CR/CXR	100,6	109,0	117,4	125,8
	2668X...CR	111,6	120,0	128,4	136,8
	3242X...CR	85,6	94,0	102,4	110,8
	3257X...CR	100,6	109,0	117,4	125,8
	3272X...CR	115,6	124,0	132,4	140,8
	2250X...BX4	95,4	103,8	112,2	120,6
	3242X...BX4	87,8	96,2	104,6	113,0
	3268X...BX4	113,8	122,2	130,6	139,0
	2264X...BP4	107,6	116,0	124,4	132,8
	3274X...BP4	121,7	130,1	138,5	146,9
	3056X...B	99,6	108,0	116,4	124,8
	3564X...B	107,6	116,0	124,4	132,8
	3216X...BXTR	59,6	68,0	76,4	84,8
	3216X...BXTH	60,4	68,8	77,2	85,6
	AM3248...10	85,6	94,0	102,4	110,8

© DR. FRITZ FAULHABER GMBH & CO. KG
Specifications subject to change without notice.

Incremental encoders

Incremental Encoders

PA2-50	Optical
PA2-100	Optical
IE2-400	Magnetic
IE2-1024	Magnetic
IEH2-4096	Magnetic
PE22-120	Optical
HEDS 5500	Optical
HXM3-64	Magnetic
IEM3-1024	Magnetic
IE3-1024	Magnetic
IE3-1024L	Magnetic, Line Driver
IEF3-4096	Magnetic
IEF3-4096L	Magnetic, Line Driver
IEH3-4096	Magnetic
IEH3-4096L	Magnetic, Line Driver
IEP3-4096	Magnetic
IERS3-500	Optical
IERS3-500L	Optical, Line Driver
IER3-10000	Optical
IER3-10000L	Optical, Line Driver
HEDL 5540	Optical, Line Driver

Backwards

Encoders

optical Encoder, digital outputs,
2 channels, 50 lines per revolution

For combination with
DC-Micromotors
Brushless DC-Motors

Series PA2-50

		PA2-50	
Lines per revolution	*N*	50	
Frequency range, up to[1]	*f*	35	kHz
Signal output, square wave		2	Channels
Supply voltage	U_{DD}	2,7 ... 3,3	V
Current consumption, typical[2]	I_{DD}	8,5	mA
Output current, max.	I_{OUT}	8	mA
Pulse width	*P*	180 ± 50	°e
Phase shift, channel A to B	*Φ*	90 ± 45	°e
Logic state width	*S*	90 ± 50	°e
Cycle	*C*	360 ± 36	°e
Signal rise/fall time, max. (C_{LOAD} = 25 pF)	*tr*/*tf*	0,3 / 0,1	µs
Inertia of code disc	*J*	0,02	gcm²
Operating temperature range		-30 ... +85	°C

[1] Velocity (min⁻¹) = *f* (Hz) x 60/*N*
[2] U_{DD} = 3 V: with unloaded outputs

For combination with Motor

Dimensional drawing A	**<L1 [mm]**
0615 ... S - K1655	19,2
Dimensional drawing B	**<L1 [mm]**
0620 ... B - K1719	23,0
Dimensional drawing C	**<L1 [mm]**
0816 ... SR - K2565	24,0

Characteristics

These incremental shaft encoders in combination with the DC-Micromotors and Brushless DC-Servomotors are designed for both indication and control of both shaft velocity and direction of rotation as well as for positioning.

An all-in-one emitter and detector chip transmits and receives LED light reflected off a low inertia reflective disc providing two channels with 90° phase shift.

The supply voltage for the encoder and the Micromotor as well as the output signals are interfaced with a flexible printed circuit (FPC).

Details for the DC-Micromotors and Brushless DC-Servomotors and suitable reduction gearheads are on separate catalog pages.

To view our large range of accessory parts, please refer to the "Accessories" chapter.

© DR. FRITZ FAULHABER GMBH & CO. KG
Specifications subject to change without notice.
www.faulhaber.com

Circuit diagram / Output signals

Output circuit

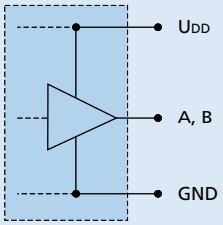

Output signals
with clockwise rotation as seen from the shaft end

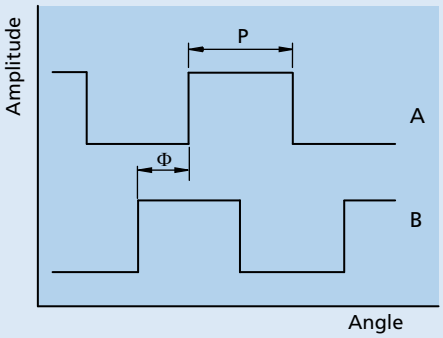

0615 ... S / 0620 ... B
Channel B leads channel A

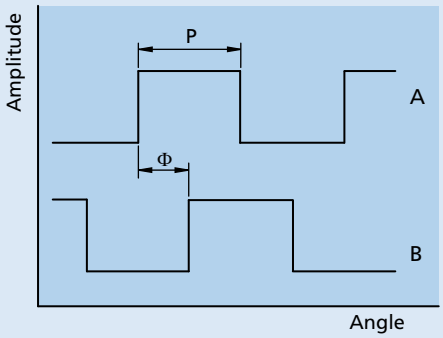

0816 ... SR

Connector information / Variants

Example product designation: **0615N003S-K1655 PA2-50**

Option	Type	Description

Connection Encoder

No.	Function
1	Motor + *
2	UDD
3	Channel A
4	Channel B
5	GND
6	Motor – *

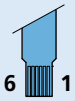

Recommended connector
Molex 52745, grid 0,5 mm, FPC / FFC, 6-conductors

*** Note:**
Brushless motors have separate motor leads.

Dimensional drawing A

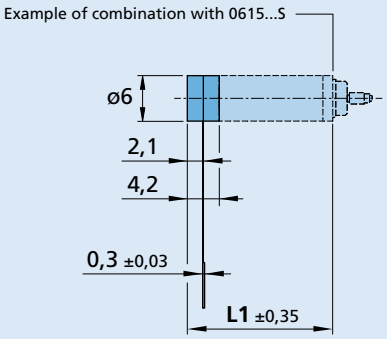

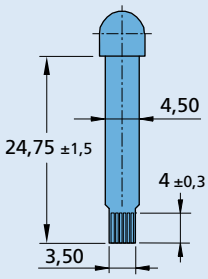

PA2-50

© DR. FRITZ FAULHABER GMBH & CO. KG
Specifications subject to change without notice.
www.faulhaber.com

Dimensional drawing B

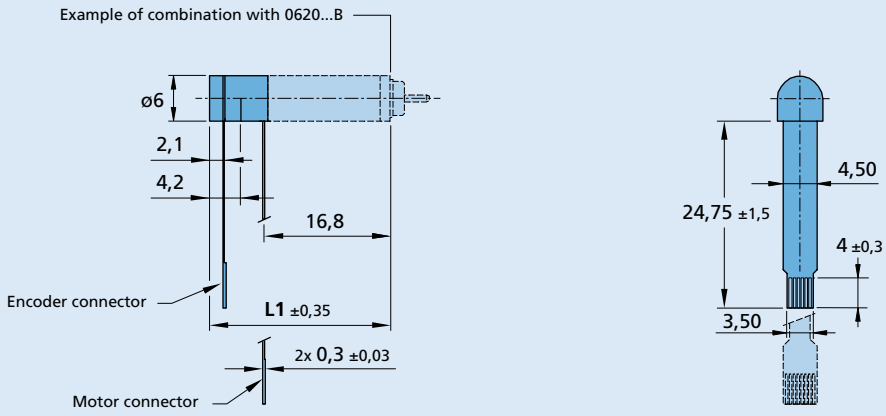

PA2-50

Dimensional drawing C

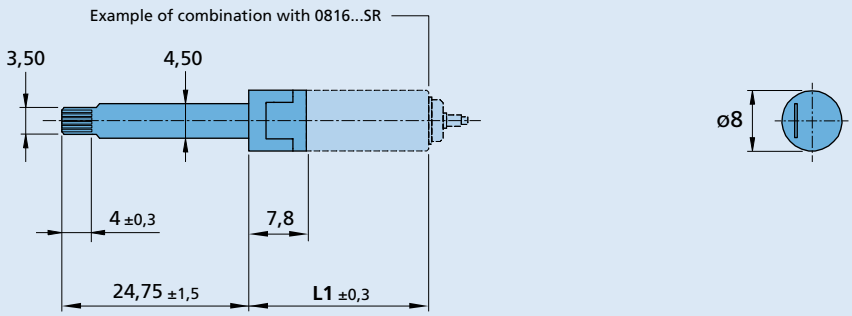

PA2-50

© DR. FRITZ FAULHABER GMBH & CO. KG
Specifications subject to change without notice.
www.faulhaber.com

Encoders

optical Encoder, digital outputs,
2 channels, 100 lines per revolution

For combination with
DC-Micromotors

Series PA2-100

		PA2-100	
Lines per revolution	*N*	100	
Frequency range, up to[1]	*f*	35	kHz
Signal output, square wave		2	Channels
Supply voltage	U_{DD}	2,7 ... 3,3	V
Current consumption, typical[2]	I_{DD}	8	mA
Pulse width	*P*	180 ± 45	°e
Phase shift, channel A to B	*Φ*	90 ± 45	°e
Logic state width	*S*	90 ± 45	°e
Cycle	*C*	360 ± 30	°e
Signal rise/fall time, max. (C_{LOAD} = 50 pF)	*tr*/*tf*	0,1 / 0,1	µs
Inertia of code disc	*J*	0,02	gcm²
Operating temperature range		-25 ... +85	°C

[1] Velocity (min⁻¹) = *f* (Hz) x 60/*N*
[2] U_{DD} = 3 V: with unloaded outputs

For combination with Motor

Dimensional drawing A	**<L1 [mm]**
1016 ... SR - K2565	23,7
1024 ... SR - K2565	31,7

Dimensional drawing B	**<L1 [mm]**
1224 ... SR - K1752	31,1

Characteristics

These incremental shaft encoders in combination with the DC-Micromotors are designed for both indication and control of both shaft velocity and direction of rotation as well as for positioning.

An all-in-one emitter and detector chip transmits and receives LED light reflected off a low inertia reflective disc providing two channels with 90° phase shift.

The supply voltage for the encoder and the Micromotor as well as the output signals are interfaced with a flexible printed circuit (FPC).

Details for the DC-Micromotors and suitable reduction gearheads are on separate catalog pages.

To view our large range of accessory parts, please refer to the "Accessories" chapter.

© DR. FRITZ FAULHABER GMBH & CO. KG
Specifications subject to change without notice.
www.faulhaber.com

Circuit diagram / Output signals

Output circuit

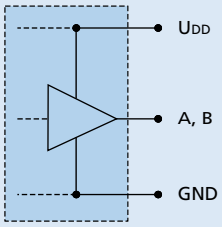

Output signals
with clockwise rotation as seen from the shaft end

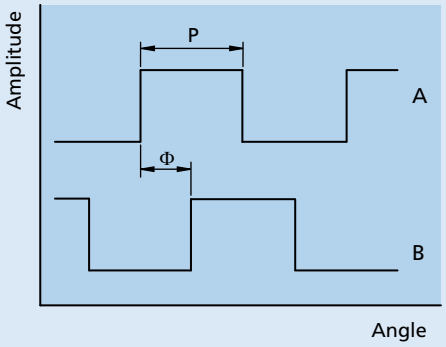

Connector information / Variants

Example product designation: **1016N006SR-K2565 PA2-100**

Option	Type	Description

Connection Encoder

No.	Function
1	Motor +
2	Motor +
3	UDD
4	Channel A
5	Channel B
6	GND
7	Motor –
8	Motor –

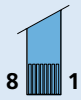

Recommended connector
Molex 52745, grid 0,5 mm, FPC / FFC, 8-conductors

Dimensional drawing A

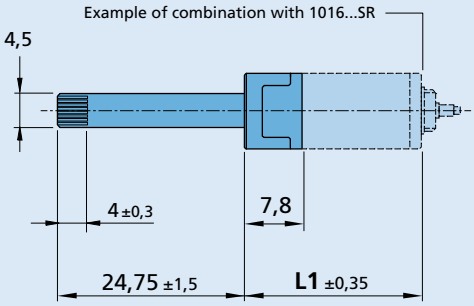

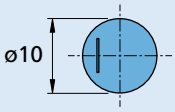

PA2-100

© DR. FRITZ FAULHABER GMBH & CO. KG
Specifications subject to change without notice.
www.faulhaber.com

Dimensional drawing B

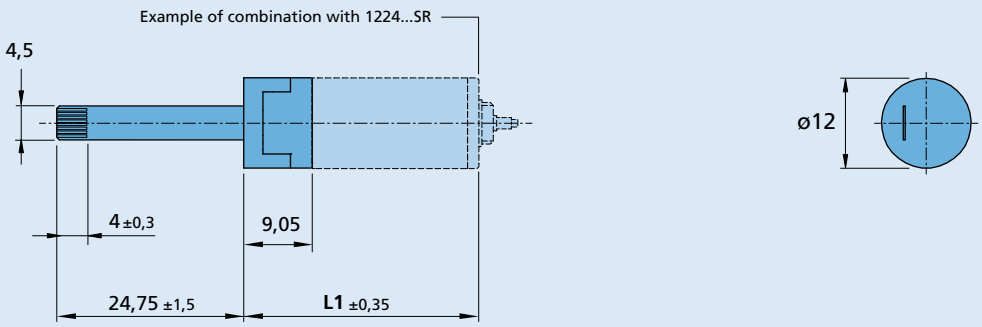

PA2-100

© DR. FRITZ FAULHABER GMBH & CO. KG
Specifications subject to change without notice.
www.faulhaber.com

Encoders

magnetic Encoder, digital outputs,
2 channels, 50 - 400 lines per revolution

For combination with
DC-Micromotors

Series IE2-400

		IE2-50	IE2-100	IE2-200	IE2-400	
Lines per revolution	N	50	100	200	400	
Frequency range, up to[1]	f	20	40	80	160	kHz
Signal output, square wave		2				Channels
Supply voltage	U_{DD}	4,5 ... 5,5				V
Current consumption, typical[2]	I_{DD}	typ. 9,5, max. 13				mA
Output current, max.[3]	I_{OUT}	5				mA
Phase shift, channel A to B	Φ	90 ± 45				°e
Signal rise/fall time, max. (C_{LOAD} = 50 pF)	tr/tf	0,1 / 0,1				µs
Inertia of sensor magnet	J	0,05				gcm²
Operating temperature range		-25 ... +85				°C

[1] Velocity (min^{-1}) = f (Hz) x 60/N
[2] U_{DD} = 5 V: with unloaded outputs
[3] U_{DD} = 5 V: low logic level < 0,5 V, high logic level > 4,5 V: CMOS- and TTL compatible

For combination with Motor

Dimensional drawing A	<L1 [mm]
1319 ... SR	21,9
1331 ... SR	33,9

Characteristics

These incremental shaft encoders in combination with the FAULHABER DC-Micromotors are used for the indication and control of both shaft velocity and direction of rotation as well as for positioning.

The encoder is integrated in the DC-Micromotors SR-Series and extends the overall length by only 1,7 mm!
Hybrid circuits with sensors and a low inertia magnetic disc provide two channels with 90° phase shift.

The supply voltage for the encoder and the DC-Micromotor as well as the two channel output signals are interfaced through a ribbon cable with connector.

Details for the DC-Micromotors and suitable reduction gearheads are on separate catalogue pages.

To view our large range of accessory parts, please refer to the "Accessories" chapter.

© DR. FRITZ FAULHABER GMBH & CO. KG
Specifications subject to change without notice.
www.faulhaber.com

Circuit diagram / Output signals

Output circuit

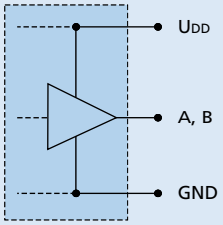

Output signals
with clockwise rotation as seen from the shaft end

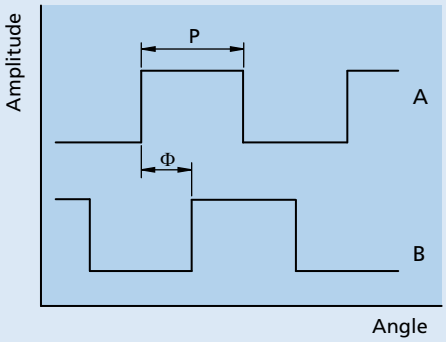

Connector information / Variants

Example product designation: **1331T012SR IE2-400**

Option	Type	Description

Connection Encoder

No.	Function
1	Motor – *
2	Motor + *
3	GND
4	UDD
5	Channel B
6	Channel A

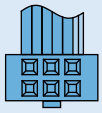

6 4 2
5 3 1

Cable
PVC-ribbon cable, 6-conductors, 0,09 mm²
Connector
EN 60603-13 / DIN-41651, grid 2,54 mm

*** Note:**
The terminal resistance of all motors with precious metal commutation is increased by approx. 0.4 Ω,and the max. allowable motor current in combination is 1A, depending on the motor can also be lower.

Dimensional drawing A

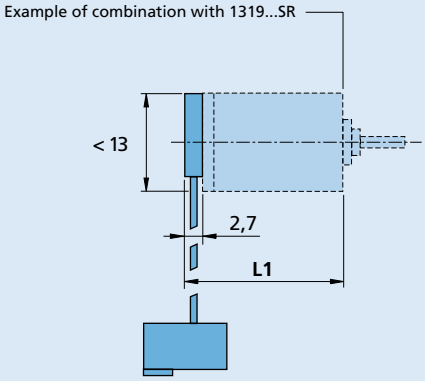

IE2-400

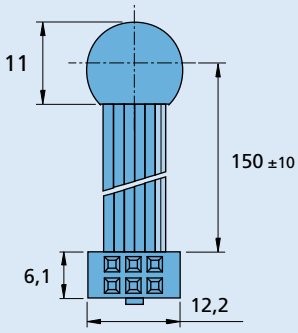

© DR. FRITZ FAULHABER GMBH & CO. KG
Specifications subject to change without notice.
www.faulhaber.com

Encoders

magnetic Encoder, digital outputs,
2 channels, 64 - 1024 lines per revolution

For combination with
DC-Micromotors
Brushless DC-Motors

Series IE2-1024

		IE2-64	IE2-128	IE2-256	IE2-512	IE2-1024	
Lines per revolution	N	64	128	256	512	1 024	
Frequency range, up to[1]	f	20	40	80	160	300	kHz
Signal output, square wave		2					Channels
Supply voltage	U_{DD}	4,5 ... 5,5					V
Current consumption, typical[2]	I_{DD}	typ. 9,5, max. 13					mA
Output current, max.[3]	I_{OUT}	5					mA
Phase shift, channel A to B	Φ	90 ± 45					°e
Signal rise/fall time, max. (C_{LOAD} = 50 pF)	tr/tf	0,1 / 0,1					µs
Inertia of sensor magnet[4]	J	0,09					gcm²
Operating temperature range		-25 ... +85					°C

[1] Velocity (min^{-1}) = f (Hz) x 60/N
[2] U_{DD} = 5 V: with unloaded outputs
[3] U_{DD} = 5 V: low logic level < 0,5 V, high logic level > 4,5 V: CMOS- and TTL compatible
[4] For the brushless DC-Servomotors the inertia of sensor magnet is: J = 0,14 gcm²

For combination with Motor

Dimensional drawing A	<L1 [mm]
1336 ... CXR - 123	47,5

Dimensional drawing B	<L1 [mm]
1516 ... SR	18,2
1524 ... SR	26,2
1717 ... SR	19,4
1724 ... SR	26,4
2224 ... SR	26,6
2232 ... SR	34,6

Dimensional drawing C	<L1 [mm]
1727 ... CXR - 123	38,2
1741 ... CXR - 123	52,2

Dimensional drawing D	<L1 [mm]
1628 ... B - K313	38,8
2036 ... B - K313	46,8
2057 ... B - K313	68,3

Characteristics

These incremental shaft encoders in combination with the FAULHABER DC-Micromotors and Brushless DC-Servomotors are used for the indication and control of both shaft velocity and direction of rotation as well as for positioning.

The encoder is integrated in the DC-Micromotors SR-Series and extends the overall length by only 1,4 mm. Built-on option for DC-Micromotors and Brushless DC-Servomotors.

Hybrid circuits with sensors and a low inertia magnetic disc provide two channels with 90° phase shift.

The supply voltage for the encoder and the DC-Micromotor as well as the two channel output signals are interfaced through a ribbon cable with connector.

Details for the DC-Micromotors and suitable reduction gearheads are on separate catalogue pages.

To view our large range of accessory parts, please refer to the "Accessories" chapter.

© DR. FRITZ FAULHABER GMBH & CO. KG
Specifications subject to change without notice.
www.faulhaber.com

Circuit diagram / Output signals

Output circuit

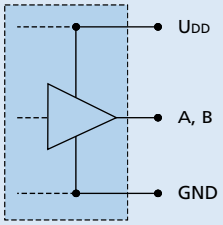

Output signals
with clockwise rotation as seen from the shaft end

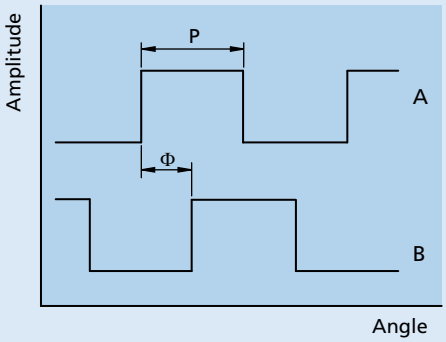

Connector information / Variants

Example product designation: **1336U012CXR-123 IE2-1024**

Option	Type	Description

Connection Encoder

No.	Function
1	Motor – *
2	Motor + *
3	GND
4	UDD
5	Channel B
6	Channel A

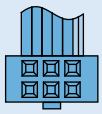

6 4 2
5 3 1

Cable
PVC-ribbon cable, 6-conductors, 0,09 mm²
Connector
EN 60603-13 / DIN-41651, grid 2,54 mm

*** Note:**
The terminal resistance of all motors with precious metal commutation is increased by approx. 0.4 Ω,and the max. allowable motor current in combination is 1A, depending on the motor can also be lower. Brushless DC-Servomotors and DC-Micromotors series CXR have separate motor leads and higher motor current is allowed.

Dimensional drawing A

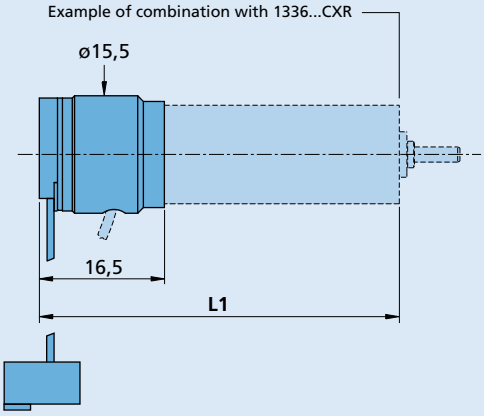

IE2-1024

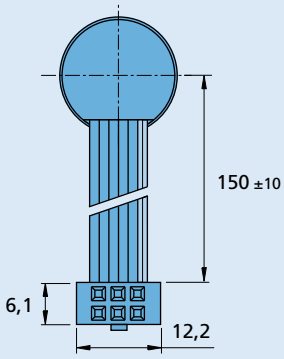

© DR. FRITZ FAULHABER GMBH & CO. KG
Specifications subject to change without notice.
www.faulhaber.com

Dimensional drawing B

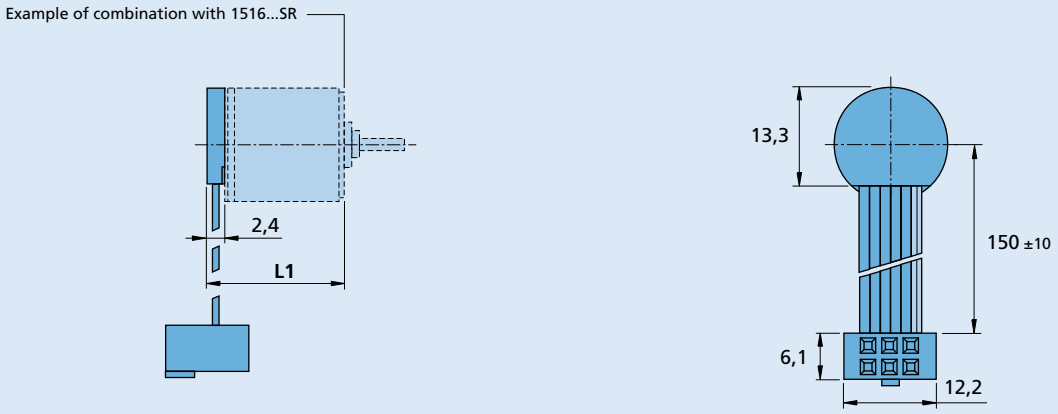

IE2-1024

Dimensional drawing C

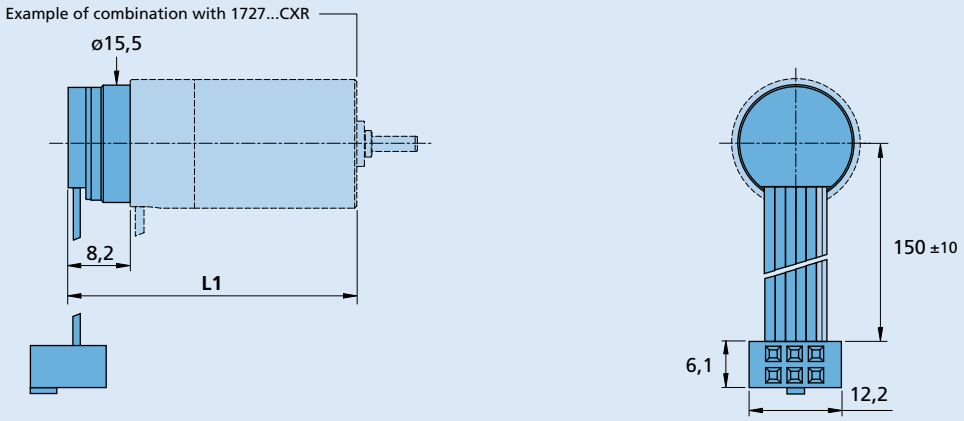

IE2-1024

Dimensional drawing D

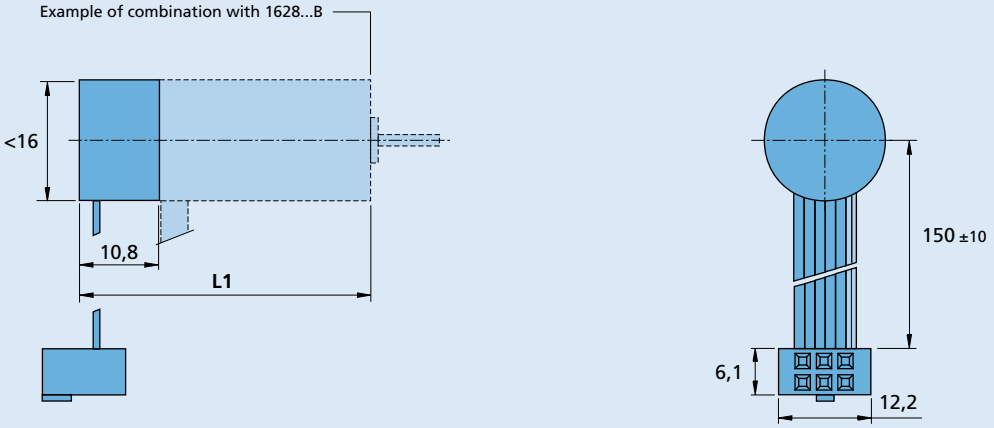

IE2-1024

© DR. FRITZ FAULHABER GMBH & CO. KG
Specifications subject to change without notice.
www.faulhaber.com

Encoders

magnetic Encoder, digital outputs,
2 channels, 16 - 4096 lines per revolution

For combination with
DC-Micromotors

Series IEH2-4096

	IEH2	-16	-32	-64	-128	-256	-512	-1024	-2048	-4096	
Lines per revolution	*N*	16	32	64	128	256	512	1 024	2 048	4 096	
Frequency range, up to[1]	*f*	5	10	20	40	80	160	320	640	875	kHz
Signal output, square wave		2									Channels
Supply voltage	U_{DD}	4,5 ... 5,5									V
Current consumption, typical[2]	I_{DD}	typ. 15, max. 25									mA
Output current, max.[3]	I_{OUT}	2,5									mA
Phase shift, channel A to B[4]	Φ	90 ± 45						90 ± 65	90 ± 75		°e
Signal rise/fall time, max. (C_{LOAD} = 50 pF)	*tr*/*tf*	0,05 / 0,05									µs
Inertia of sensor magnet	*J*	0,11									gcm²
Operating temperature range		-40 ... +100									°C

[1] Velocity (min⁻¹) = *f* (Hz) x 60/*N*
[2] U_{DD} = 5 V: with unloaded outputs
[3] U_{DD} = 5 V: low logic level < 0,4 V, high logic level > 4,6 V: CMOS- and TTL compatible
[4] At 5 000 min⁻¹

For combination with Motor

Dimensional drawing A	**<L1 [mm]**
1336 ... CXR - 123	47,5

Dimensional drawing B	**<L1 [mm]**
1516 ... SR	18,2
1524 ... SR	26,2
1717 ... SR	19,4
1724 ... SR	26,4
2224 ... SR	26,6
2232 ... SR	34,6

Dimensional drawing C	**<L1 [mm]**
1727 ... CXR - 123	38,2
1741 ... CXR - 123	52,2

Characteristics

These incremental shaft encoders in combination with the FAULHABER DC-Micromotors are used for the indication and control of both shaft velocity and direction of rotation as well as for positioning.

The encoder is integrated in the DC-Micromotors SR-Series and extends the overall length by only 1,4 mm.

A segmented magnetic disc provides a magnetic field which is detected and further processed by an angle sensor.
The output signals of both channels consist of a square wave signal with 90° phase shift and up to 4096 impulses per motor revolution.

The encoder is available with different standard resolutions. The supply voltage for the encoder and the DC-Micromotor as well as the two channel output signals are interfaced through a ribbon cable with connector.

Details for the DC-Micromotors and suitable reduction gearheads are on separate catalogue pages.

To view our large range of accessory parts, please refer to the "Accessories" chapter.

© DR. FRITZ FAULHABER GMBH & CO. KG
Specifications subject to change without notice.
www.faulhaber.com

Circuit diagram / Output signals

Output circuit

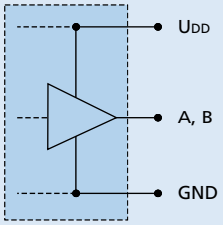

Output signals
with clockwise rotation as seen from the shaft end

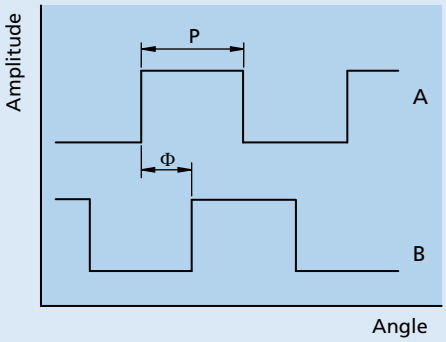

Connector information / Variants

Example product designation: **1516T006SR IEH2-256**

Option	Type	Description

Connection Encoder

No.	Function
1	Motor – *
2	Motor + *
3	GND
4	UDD
5	Channel B
6	Channel A

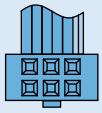

6 4 2
5 3 1

Cable
PVC-ribbon cable, 6-conductors, 0,09 mm²
Connector
EN 60603-13 / DIN-41651, grid 2,54 mm

*** Note:**
DC-Micromotors series CXR have separate motor leads.

Dimensional drawing A

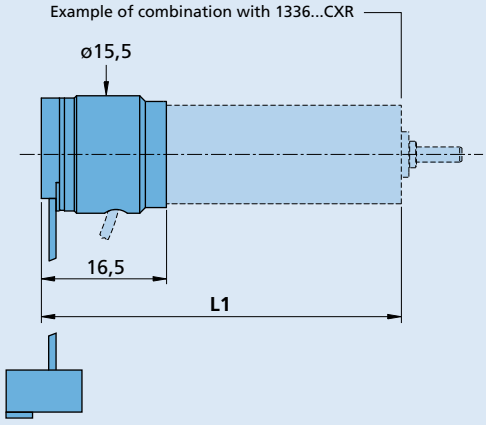

IEH2-4096

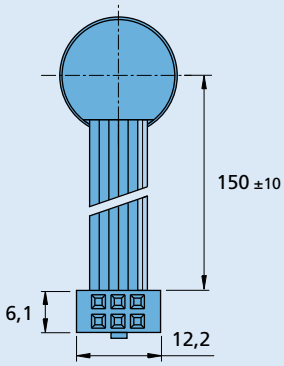

© DR. FRITZ FAULHABER GMBH & CO. KG
Specifications subject to change without notice.
www.faulhaber.com

Dimensional drawing B

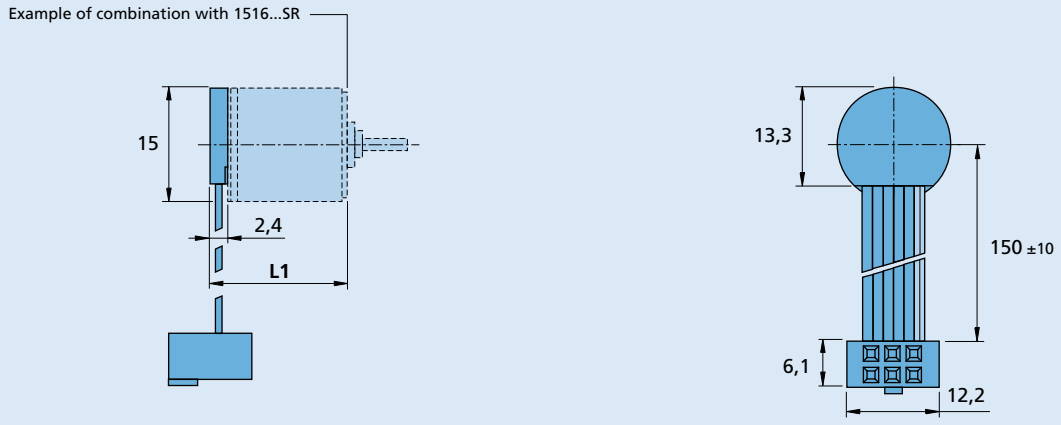

IEH2-4096

Dimensional drawing C

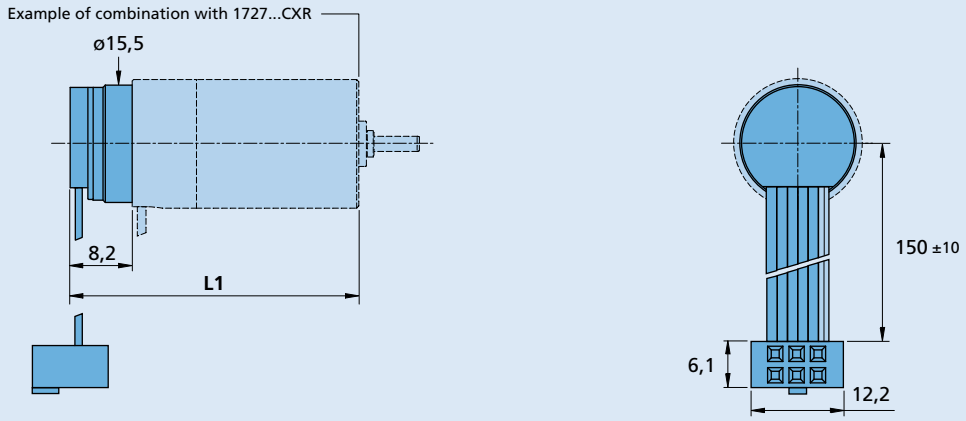

IEH2-4096

© DR. FRITZ FAULHABER GMBH & CO. KG
Specifications subject to change without notice.
www.faulhaber.com

Encoders

optical Encoder, digital outputs,
2 channels, 120 lines per revolution

For combination with
Stepper Motors

Series PE22-120

		PE22-120	
Lines per revolution	*N*	120	
Frequency range, up to[1]	*f*	30	kHz
Signal output, square wave		2	Channels
Supply voltage	U_{DD}	4,5 ... 5,5	V
Current consumption, typical[2]	I_{DD}	20	mA
Pulse width	*P*	180 ± 45	°e
Phase shift, channel A to B	*Φ*	90 ± 45	°e
Logic state width	*S*	90 ± 45	°e
Cycle	*C*	360 ± 30	°e
Signal rise/fall time, max. (C_{LOAD} = pF)	*tr*/*tf*	0,5 / 0,1	µs
Inertia of code disc	*J*	0,24	gcm²
Operating temperature range		-20 ... +85	°C

[1] Velocity (min⁻¹) = *f* (Hz) x 60/*N*
[2] U_{DD} = 5 V: with unloaded outputs

For combination with Motor

Dimensional drawing A	<L1 [mm]
AM2224	38,0
AM2224R3	40,9

Characteristics

These incremental shaft encoders in combination with two phases stepper motors are designed for indication and control of both, shaft velocity and direction of rotation as well as for position verification.

The encoder is placed at the rear output shaft of the stepper motor and extends its overall length by 11 mm.

The supply voltage for the encoder and the stepper motors as well as the two channel output signals are interfaced through a ribbon cable with connector.

Details for the stepper motors and suitable reduction gearheads are on the corresponding data sheets.

To view our large range of accessory parts, please refer to the "Accessories" chapter.

© DR. FRITZ FAULHABER GMBH & CO. KG
Specifications subject to change without notice.
www.faulhaber.com

Circuit diagram / Output signals

Output circuit

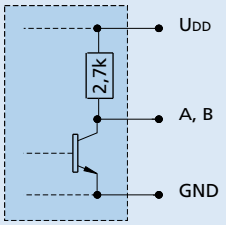

Recommendation:
Please use a latch to capture the outputs.

Output signals
with clockwise rotation as seen from the shaft end

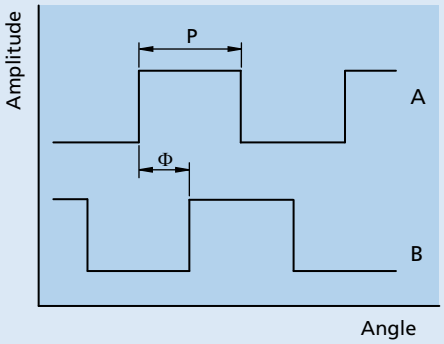

Connector information / Variants

Example product designation: **AM2224SB025016 PE22-120**

Option	Type	Description

Connection Encoder and Motor

No.	Function
1	Motor Phase A +
2	Motor Phase A –
3	Motor Phase B +
4	Motor Phase B –
5	$U_{DD\ ENC}$
6	GND
7	Channel A
8	Channel B
9	N.C
10	N.C.

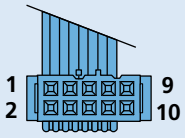

Connector
Serie 71600-010LF, ribbon cable

Dimensional drawing A

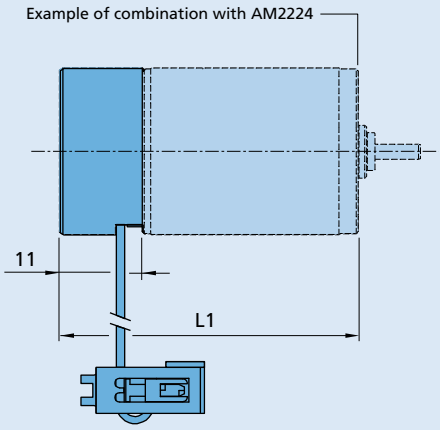

PE22-120

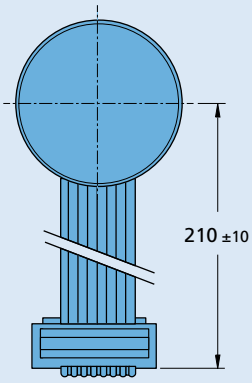

© DR. FRITZ FAULHABER GMBH & CO. KG
Specifications subject to change without notice.
www.faulhaber.com

Encoders

optical Encoder, digital outputs,
2 channels, 100 - 500 lines per revolution

For combination with
Brushless DC-Motors

Series HEDS 5500

		HEDS 5500 C	HEDS 5500 A	
Lines per revolution	*N*	100	500	
Frequency range, up to[1]	*f*	100	100	kHz
Signal output, square wave		2		Channels
Supply voltage	U_{DD}	4,5 ... 5,5		V
Current consumption, typical[2]	I_{DD}	17		mA
Pulse width	*P*	180 ± 45		°e
Phase shift, channel A to B	*Φ*	90 ± 20		°e
Logic state width	*S*	90 ± 45		°e
Cycle	*C*	360 ± 5,5		°e
Signal rise/fall time, max. (C_{LOAD} = pF)	*tr*/*tf*	0,25 / 0,25		µs
Inertia of code disc	*J*	0,6		gcm²
Operating temperature range		-40 ... +100		°C

[1] Velocity (min⁻¹) = *f* (Hz) x 60/*N*
[2] U_{DD} = 5 V: with unloaded outputs

For combination with Motor

Dimensional drawing A	<L1 [mm]
2036 ... B - K312	56,8
2057 ... B - K312	78,3
2444 ... B - K312	64,9
3056 ... B - K312	76,1
3564 ... B - K312	84,1
4490 ... B - K312	116,3
4490 ... BS - K312	116,3

Characteristics

These incremental shaft encoders in combination with the DC-Motors are designed for the indication and control of both shaft velocity and direction of rotation as well as for positioning.

A LED source and lens system transmits collimated light through a low inertia metal disc to give two channels with 90° phase shift.
The single 5 volt supply and the two or three channel digital output signals are interfaced with a 5-pin connector.

Motors with ball bearings are recommended for continuous operation at low and high speeds and for elevated radial shaft load.

Details for the Motors and suitable reduction gearheads are on separate catalogue pages.

To view our large range of accessory parts, please refer to the "Accessories" chapter.

© DR. FRITZ FAULHABER GMBH & CO. KG
Specifications subject to change without notice.
www.faulhaber.com

Circuit diagram / Output signals

Output circuit

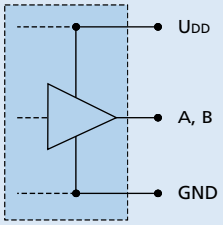

Output signals
with clockwise rotation as seen from the shaft end

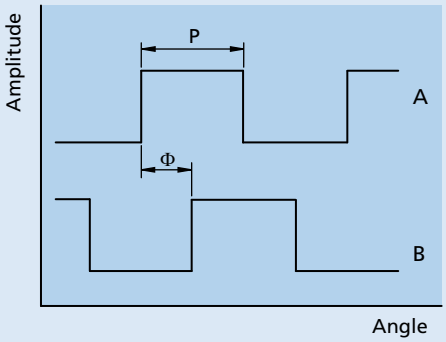

Connection information

Example product designation: **2444S024B-K312 HEDS5500C**

Option	Type	Description

Connection Encoder

No.	Function
1	GND
2	N.C.
3	Channel A
4	UDD
5	Channel B

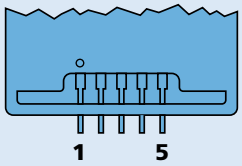

Recommended connector
AMP 103686-4/640442-5, Molex 2695/2759, FCI 65039-032/4825x-000

Dimensional drawing A

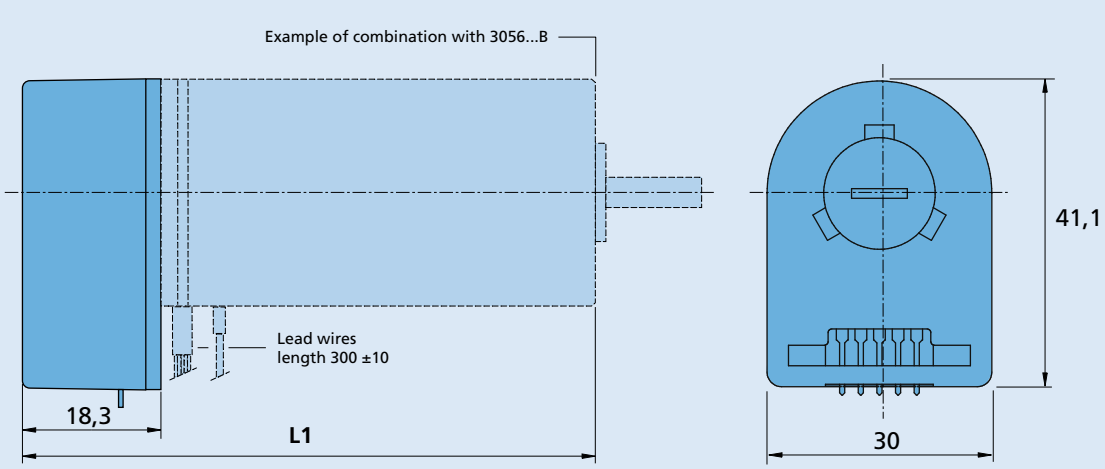

HEDS 5500

© DR. FRITZ FAULHABER GMBH & CO. KG
Specifications subject to change without notice.
www.faulhaber.com

Encoders

magnetic Encoder, digital outputs,
3 channels, 16 - 64 lines per revolution

For combination with
DC-Micromotors
Brushless DC-Motors

Series HXM3-64

		HXM3-64	
Lines per revolution	*N*	64	
Frequency range, up to[1]	*f*	32	kHz
Signal output, square wave		2+1 Index	Channels
Supply voltage	U_{DD}	4,5 ... 5,5	V
Current consumption, typical[2]	I_{DD}	9	mA
Pulse width	*P*	180 ± 45	°e
Phase shift, channel A to B	*Φ*	90 ± 45	°e
Logic state width	*S*	90 ± 45	°e
Cycle	*C*	360 ± 30	°e
Signal rise/fall time, max. (C_{LOAD} = 50 pF)	*tr/tf*	60 / 60	µs
Inertia of sensor magnet[3]	*J*	0,02	gcm²
Operating temperature range		-25 ... +85	°C

[1] Velocity (min^{-1}) = *f* (Hz) x 60/*N*
[2] U_{DD} = 5 V: with unloaded outputs
[3] No additional inertia for series 0620 ... B

For combination with Motor

Dimensional drawing A	<L1 [mm]
0615 ... S - K1707	19,4

Dimensional drawing B	<L1 [mm]
0620 ... B - K1674	21,5

Characteristics

These incremental shaft encoders in combination with the FAULHABER DC-Motors are designed for indication and control of both shaft velocity and direction of rotation as well as for positioning.

Solid state sensors and a low inertia magnetic disc provide two channels with 90° phase shift and one index channel.

The supply voltage for the encoder and the DC-Motor as well as the output signals are interfaced with a flexible printed circuit (FPC) to a 8-pin ZIF connector.

Encoder is programmable by user to 16, 32, and 64 lines per revolution by setting the CFG2 pin to high, open, or ground respectively.
The input power must be cycled off and on to change the settings.

Details for the DC-Motors and suitable reduction gearheads are on separate catalog pages.

To view our large range of accessory parts, please refer to the "Accessories" chapter.

© DR. FRITZ FAULHABER GMBH & CO. KG
Specifications subject to change without notice.
www.faulhaber.com

Circuit diagram / Output signals

Output circuit

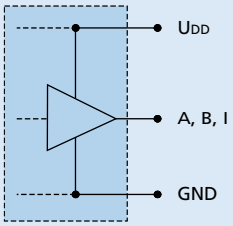

Output signals
with clockwise rotation as seen from the shaft end

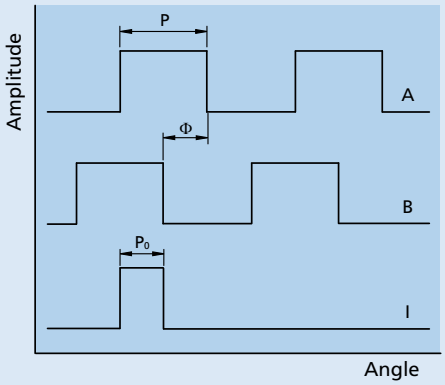

Caution: channel B leads channel A

Connector information / Variants

Example product designation: **0615N003S-K1707 HXM3-64**

Option	Type	Description

Connection Encoder and Motor

No.	Function
1	Motor + *
2	UDD
3	Channel I
4	Channel A
5	Channel B
6	Cfg2
7	GND
8	Motor – *

Flexboard
8 circuit, 0,5 mm pitch

Recommended connector
Top contact style, 8 circuits, 0,5 mm pitch,
e.g.: Molex 52745

*** Note:**
Brushless motors have separate motor leads.

Dimensional drawing A

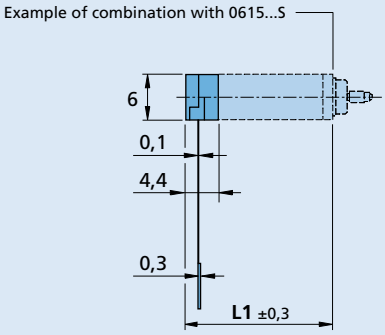

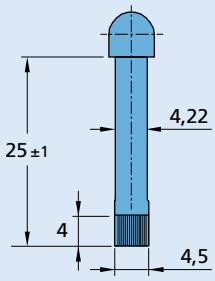

HXM3-64

© DR. FRITZ FAULHABER GMBH & CO. KG
Specifications subject to change without notice.
www.faulhaber.com

Dimensional drawing B

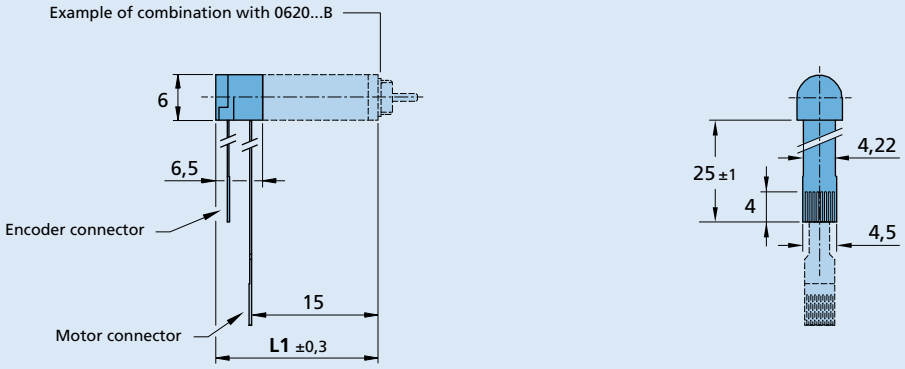

HXM3-64

© DR. FRITZ FAULHABER GMBH & CO. KG
Specifications subject to change without notice.
www.faulhaber.com

Encoders

magnetic Encoder, digital outputs,
3 channels, 32 - 1024 lines per revolution

For combination with
Brushless DC-Motors

Series IEM3-1024

		IEM3-32	IEM3-64	IEM3-128	IEM3-256	IEM3-512	IEM3-1024	
Lines per revolution	N	32	64	128	256	512	1 024	
Frequency range, up to[1]	f	64	128	256	500	500	500	kHz
Signal output, square wave		2+1 Index						Channels
Supply voltage	U_{DD}	4,5 ... 5,5						V
Current consumption, typical[2]	I_{DD}	typ. 16, max. 23						mA
Output current, max.[3]	I_{OUT}	4						mA
Index Pulse width[4]	P_0	90 ± 45			90 ± 75			°e
Phase shift, channel A to B[4]	Φ	90 ± 45			90 ± 75			°e
Signal rise/fall time, max. (C_{LOAD} = 50 pF)	tr/tf	0,1 / 0,1						µs
Inertia of sensor magnet[5]	J	0,007						gcm²
Operating temperature range		-30 ... +100						°C

[1] Velocity (min⁻¹) = f (Hz) x 60/N
[2] U_{DD} = 5 V: with unloaded outputs
[3] U_{DD} = 5 V: low logic level < 0,4 V, high logic level > 4,5 V: CMOS- and TTL compatible
[4] At 5 000 min⁻¹
[5] No additional inertia for series 0824...B and 1028...B

For combination with Motor

Dimensional drawing A	**<L1 [mm]**
0824 ... B	24,1
Dimensional drawing B	**<L1 [mm]**
1028 ... B	28,1
Dimensional drawing C	**<L1 [mm]**
1645 ... BHS	45,0
1660 ... BHS	60,0
1660 ... BHT	60,0

Characteristics

These incremental encoders in combination with the FAULHABER motors are used for the indication and control of both velocity and direction of rotation as well as for positioning.

A permanent magnet on the shaft creates a moving magnetic field which is captured using an angular sensor and further processed. At the encoder outputs, two 90° phase-shifted square wave signals are available with up to 1024 impulses and an index impulse per motor revolution.

The encoder is available in a variety of different resolutions and is suitable for speed control and positioning applications.

In case of 0824...B and 1028...B motors and encoders are connected via a common flexboard.
In case of the brushless DC-Servomotors series BHx Hall signals and encoders are connected via a common flat cable, but the motor phases A,B and C have separate single wires.

To view our large range of accessory parts, please refer to the "Accessories" chapter.

© DR. FRITZ FAULHABER GMBH & CO. KG
Specifications subject to change without notice.
www.faulhaber.com

Circuit diagram / Output signals

Output circuit

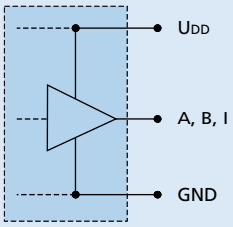

Output signals
with clockwise rotation as seen from the shaft end

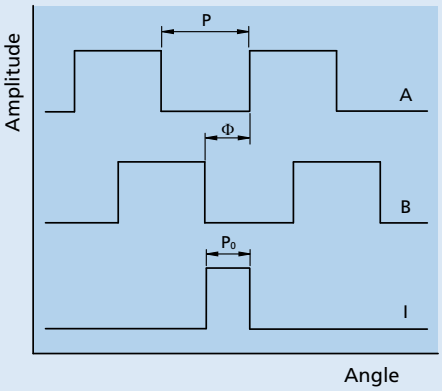

Connector information / Variants

Example product designation: **0824K006B IEM3-1024**

Option	Description
Resolutions	Resolutions from 1 - 127 lines per revolution are available on request.

Connection Encoder and Motor

see drawing A and B

No.	Function
1	Phase C
2	Phase B
3	Phase A
4	GND
5	UDD
6	Hall sensor C
7	Hall sensor B
8	Hall sensor A
9	Channel B
10	Channel A
11	Channel I
12	N.C.

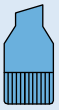

Flexboard
12 circuits, 0,5 mm pitch

Recommended connector
Top contact style, 12 circuits, 0,5 mm pitch, e.g.: Molex: 52745-1297

see drawing C

No.	Function
1	GND
2	UDD
3	Hall sensor C
4	Hall sensor B
5	Hall sensor A
6	Channel B
7	Channel A
8	Channel I

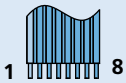

Cable
PVC-ribbon cable
8-AWG 28, 1,27 mm

Caution: incorrect lead connection will damage the motor electronics!

Dimensional drawing A

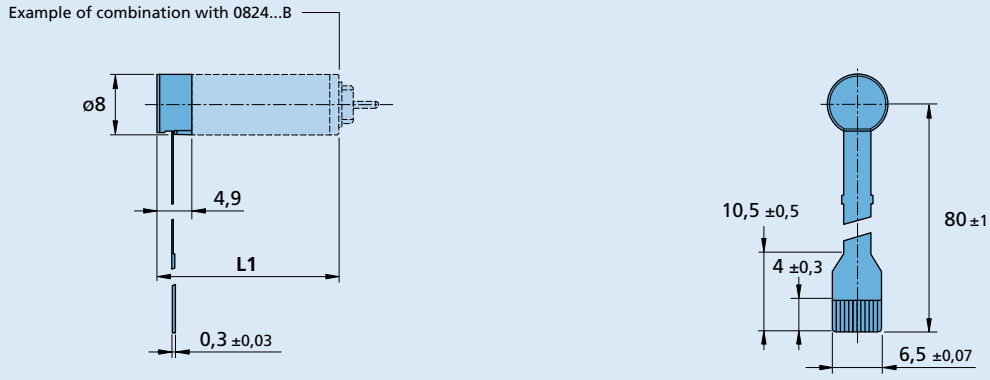

IEM3-1024

© DR. FRITZ FAULHABER GMBH & CO. KG
Specifications subject to change without notice.
www.faulhaber.com

Dimensional drawing B

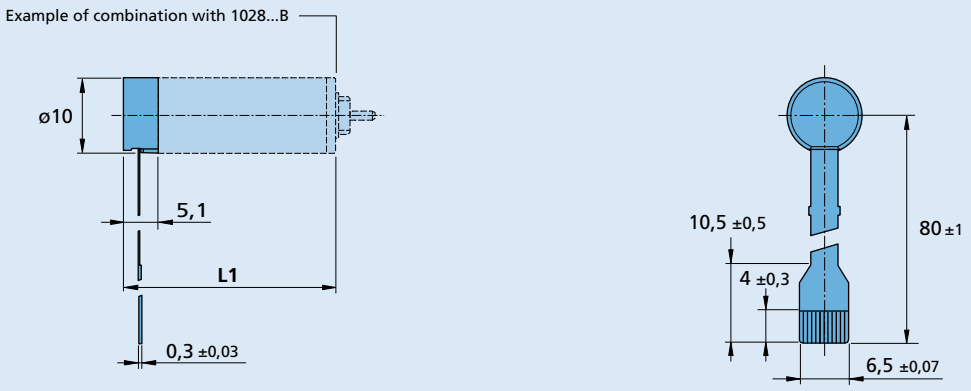

IEM3-1024

Dimensional drawing C

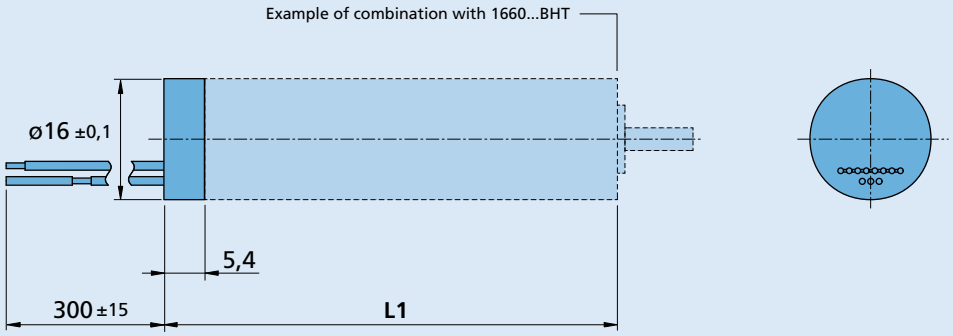

IEM3-1024

© DR. FRITZ FAULHABER GMBH & CO. KG
Specifications subject to change without notice.
www.faulhaber.com

Encoders

magnetic Encoder, digital outputs,
3 channels, 1 - 1024 lines per revolution

For combination with
Brushless DC-Motors
DC-Micromotors
Stepper Motors

Series IE3-1024

		IE3-32	IE3-64	IE3-128	IE3-256	IE3-512	IE3-1024	
Lines per revolution	*N*	32	64	128	256	512	1 024	
Frequency range, up to[1]	*f*	15	30	60	120	240	430	kHz
Signal output, square wave		2+1 Index						Channels
Supply voltage[2]	U_{DD}	4,5 ... 5,5						V
Current consumption, typical[3]	I_{DD}	typ. 20, max. 30						mA
Output current, max.[4]	I_{OUT}	4						mA
Index Pulse width[5]	P_0	90 ± 45						°e
Phase shift, channel A to B[5]	Φ	90 ± 45						°e
Signal rise/fall time, max. (C_{LOAD} = 50 pF)	*tr*/*tf*	0,1 / 0,1						µs
Inertia of sensor magnet	*J*	0,08						gcm²
Operating temperature range		-40 ... +100						°C
Accuracy, typ.		0,5						°m
Repeatability, typ.		0,1						°m
Hysteresis		0,17						°m
Edge spacing, min.		421						ns
Mass, typ.		13,5						g

[1] Velocity (min^{-1}) = *f* (Hz) x 60/*N*
[2] 3,0 ... 3,6 V optional available on request
[3] U_{DD} = 5 V: with unloaded outputs
[4] U_{DD} = 5 V: low logic level < 0,4 V, high logic level > 4,5 V: CMOS- and TTL compatible
[5] At 5 000 min^{-1}

For combination with Motor

Dimensional drawing A	<L1 [mm]
2214 ... BXT H	26,8
3216 ... BXT H	28,7
4221 ... BXT H	34,0

Dimensional drawing B	<L1 [mm]
2237 ... CXR	52,5
2264 ... BP4	79,1
3274 ... BP4	90,8

Dimensional drawing C	<L1 [mm]
2342 ... CR	60,5
2642 ... CXR	60,5
2642 ... CR	60,5
2657 ... CXR	75,5
2657 ... CR	75,5
2668 ... CR	86,5
3242 ... CR	60,5
3257 ... CR	75,5
3272 ... CR	90,5

Dimensional drawing D	<L1 [mm]
2444 ... B - K1838	55,3
3056 ... B - K1838	67,3
3564 ... B - K1838	75,3
4490 ... B - K1838	100,3
4490 ... BS - K1838	100,3

Dimensional drawing E	<L1 [mm]
2232 ... BX4	50,2
2250 ... BX4	68,2

Dimensional drawing F	<L1 [mm]
3242 ... BX4	60,0
3268 ... BX4	86,0

Dimensional drawing G	<L1 [mm]
3863 ... CR - 2016	82,6
3890 ... CR - 2016	108,6

Dimensional drawing H	<L1 [mm]
AM3248	56,4

Dimensional drawing I	<L1 [mm]
DM40100R	38,9
DM52100N	45,9
DM52100R	45,9

Characteristics

These incremental encoders with 3 output channels, in combination with the FAULHABER Motors, are used for the indication and control of both shaft velocity and direction of rotation as well as for positioning.

A permanent magnet on the shaft creates a moving magnetic field which is captured using an angular sensor and further processed. At the encoder outputs, two 90° phase-shifted square wave signals are available with up to 1024 impulses and an index impulse per motor revolution.

The encoder is available in a variety of different resolutions.

The encoder is connected with a ribbon cable.

To view our large range of accessory parts, please refer to the "Accessories" chapter.

© DR. FRITZ FAULHABER GMBH & CO. KG
Specifications subject to change without notice.
www.faulhaber.com

Circuit diagram / Output signals

Output circuit

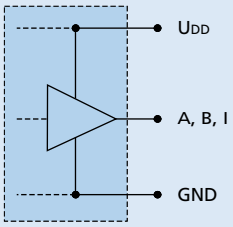

Output signals
with clockwise rotation as seen from the shaft end

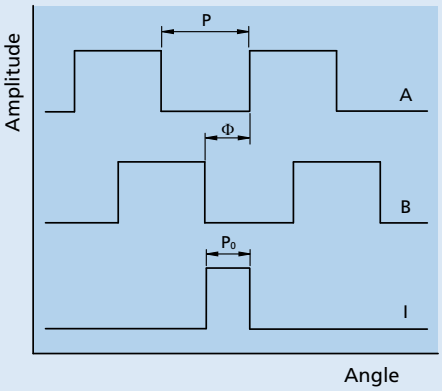

Connector information / Variants

Example product designation: **2444S024B-K1838 IE3-1024**

Option	Type	Description
3807	Connector 6 1	for combination with DC-Motors series CR, CXR and with Brushless DC-Motor series B(S), BP4 and BXT H. Connector variants AWG 28 / PVC ribbon cable with connector MOLEX Picoblade 51021-0600, recommended mating connector 53047-0610.
3592	Connector 6 1	for combination with Brushless DC-Motors series BX4. Connector variants AWG 28 / PVC ribbon cable with connector MOLEX Picoblade 51021-0600, recommended mating connector 53047-0610. Inclusive motor connector 3830
	Resolutions	Resolutions from 1 - 1024 lines per revolution are available by request.

Connection Encoder

No.	Function
1	N.C.
2	Channel I
3	GND
4	UDD
5	Channel B
6	Channel A

Standard cable
PVC-ribbon cable, 6-AWG 28, 1,27 mm

Caution:
Incorrect lead connection will damage the motor electronics!
In combination with the BX4 brushless DC-servomotors with digital Hall sensors, the sensor supply connections of encoder and motor are connected to each other.

Dimensional drawing A

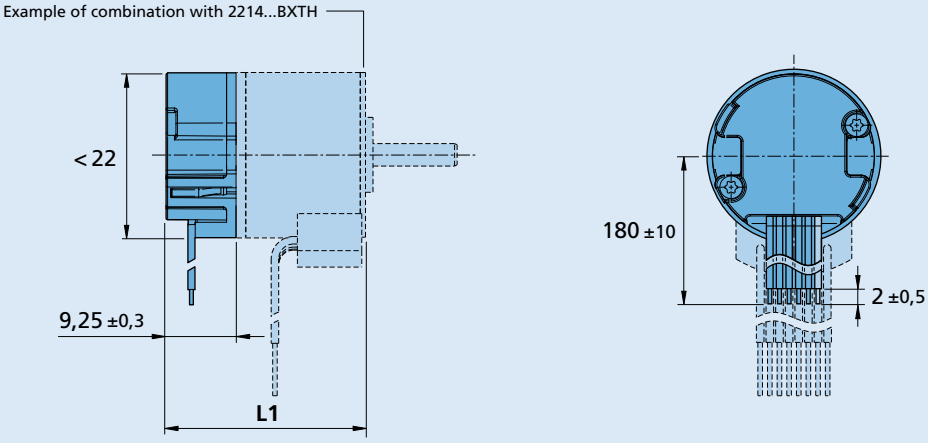

IE3-1024

© DR. FRITZ FAULHABER GMBH & CO. KG
Specifications subject to change without notice.
www.faulhaber.com

Dimensional drawing B

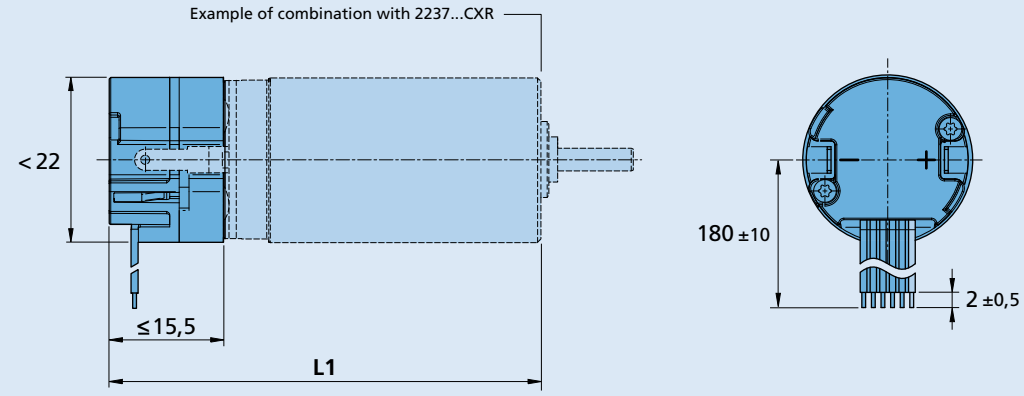

IE3-1024

Dimensional drawing C

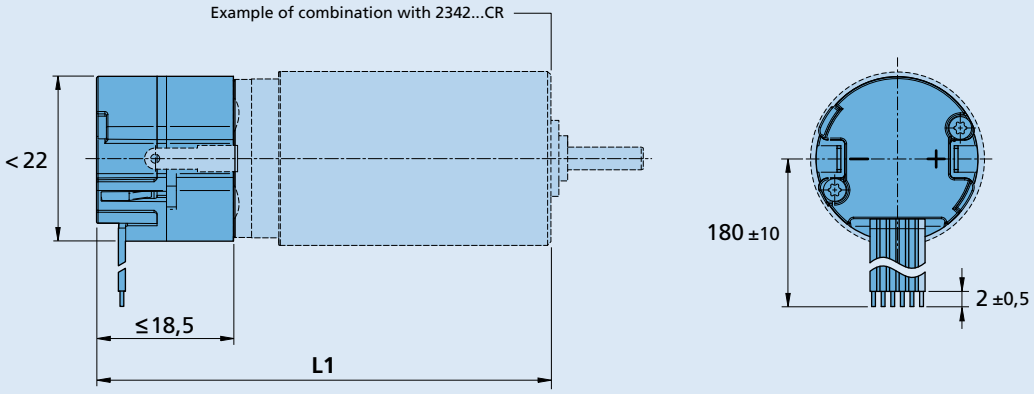

IE3-1024

Dimensional drawing D

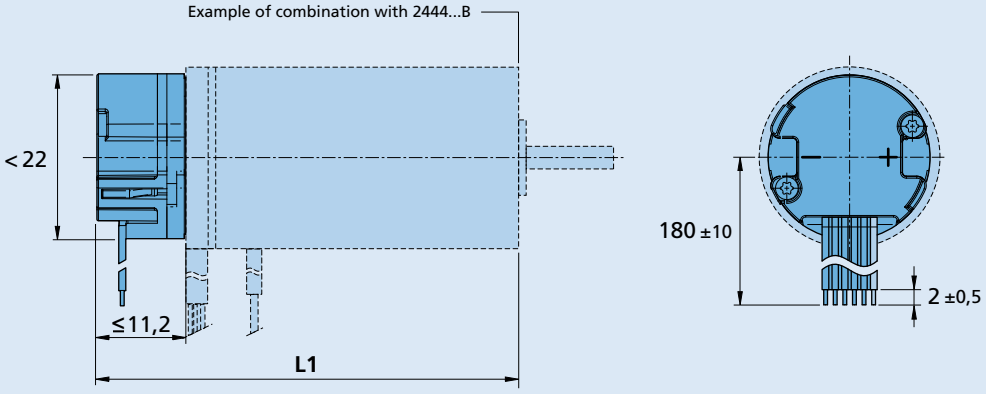

IE3-1024

© DR. FRITZ FAULHABER GMBH & CO. KG
Specifications subject to change without notice.
www.faulhaber.com

Dimensional drawing E

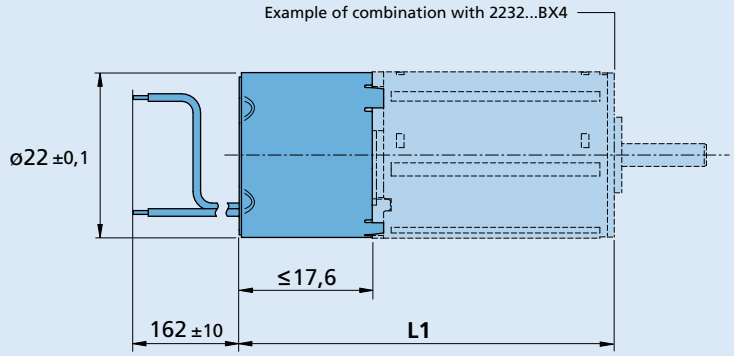

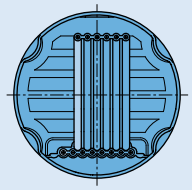

IE3-1024

Dimensional drawing F

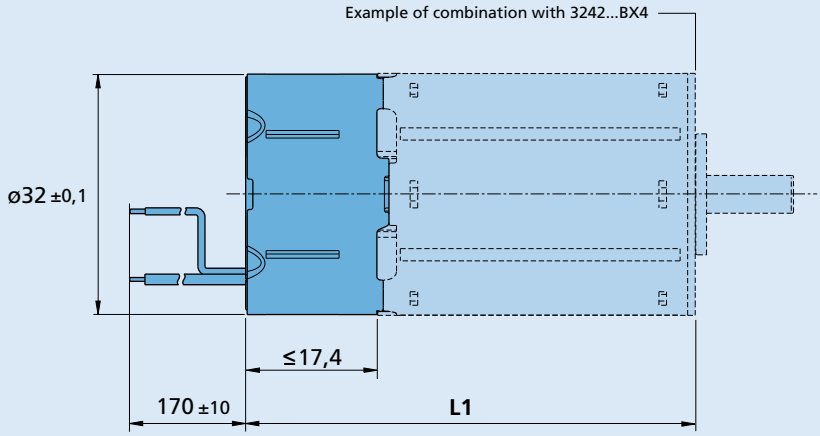

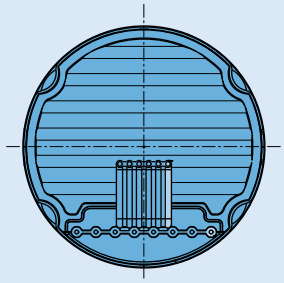

IE3-1024

Dimensional drawing G

Scale reduced

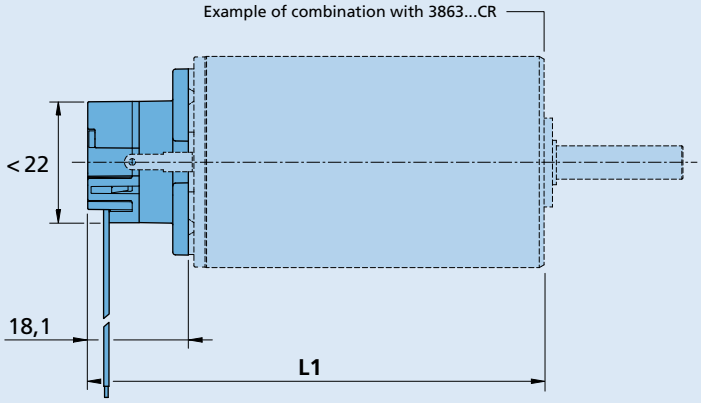

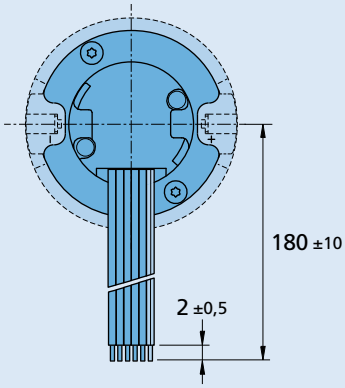

IE3-1024

© DR. FRITZ FAULHABER GMBH & CO. KG
Specifications subject to change without notice.
www.faulhaber.com

Dimensional drawing H

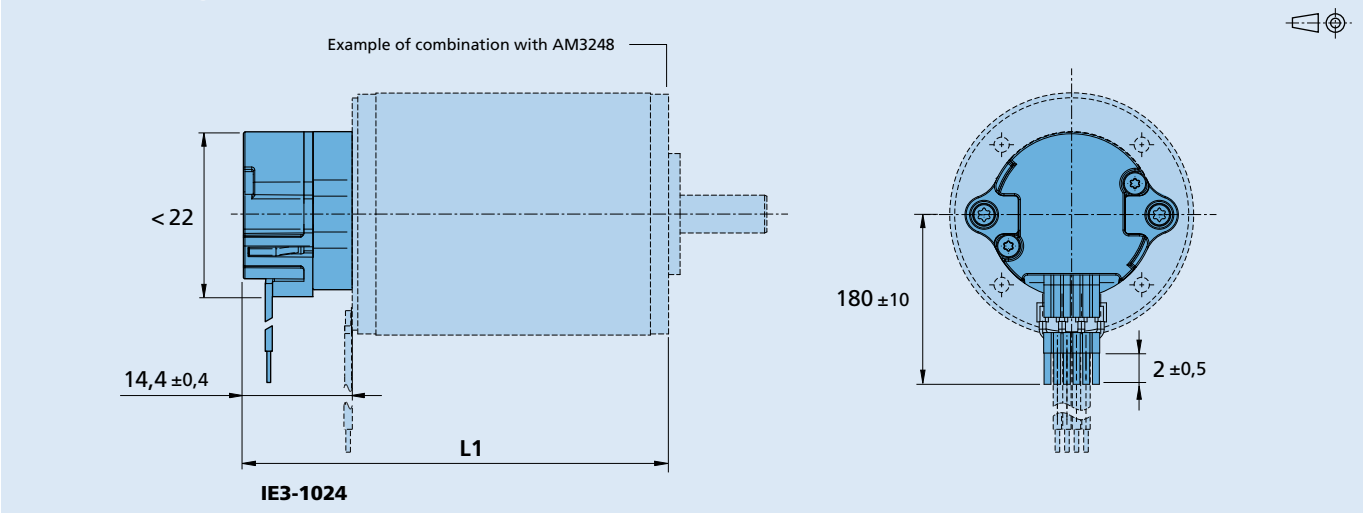

Dimensional drawing I

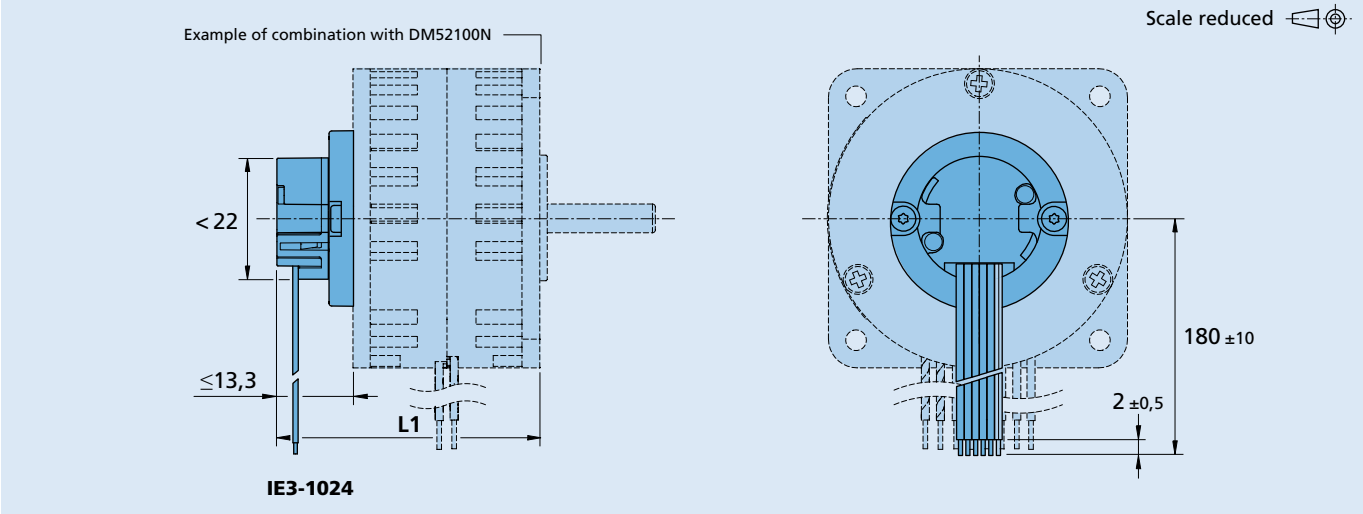

© DR. FRITZ FAULHABER GMBH & CO. KG
Specifications subject to change without notice.
www.faulhaber.com

Encoders

magnetic Encoder, digital outputs, 3 channels,
1 - 1024 lines per revolution, Line Driver

For combination with
Brushless DC-Motors
DC-Micromotors

Series IE3-1024 L

		IE3-32 L	IE3-64 L	IE3-128 L	IE3-256 L	IE3-512 L	IE3-1024 L	
Lines per revolution	*N*	32	64	128	256	512	1 024	
Frequency range, up to[1]	*f*	15	30	60	120	240	430	kHz
Signal output, square wave		2+1 Index and complementary outputs						Channels
Supply voltage	U_{DD}	4,5 ... 5,5						V
Current consumption, typical[2]	I_{DD}	typ. 20, max. 30						mA
Index Pulse width[3]	P_0	90 ± 45						°e
Phase shift, channel A to B[3]	Φ	90 ± 45						°e
Inertia of sensor magnet	*J*	0,08						gcm²
Operating temperature range		-40 ... +100						°C
Accuracy, typ.		0,5						°m
Repeatability, typ.		0,1						°m
Hysteresis		0,17						°m
Edge spacing, min.		421						ns
Mass, typ.		13,5						g

[1] Velocity (min⁻¹) = *f* (Hz) x 60/*N*
[2] U_{DD} = 5 V: with unloaded outputs
[3] At 5 000 min⁻¹

Note: The output signals are TIA-422 compatible.
Examples of Line Driver Receivers: ST26C32AB (STM), AM26C32 (TI).

For combination with Motor

Dimensional drawing A	<L1 [mm]
2214 ... BXT H	26,8
3216 ... BXT H	28,7
4221 ... BXT H	34,0

Dimensional drawing B	<L1 [mm]
2237 ... CXR	52,5
2264 ... BP4	79,1
3274 ... BP4	90,8

Dimensional drawing C	<L1 [mm]
2342 ... CR	60,5
2642 ... CXR	60,5
2642 ... CR	60,5
2657 ... CXR	75,5
2657 ... CR	75,5
2668 ... CR	86,5
3242 ... CR	60,5
3257 ... CR	75,5
3272 ... CR	90,5

Dimensional drawing D	<L1 [mm]
2444 ... B - K1838	55,3
3056 ... B - K1838	67,3
3564 ... B - K1838	75,3
4490 ... B - K1838	100,3
4490 ... BS - K1838	100,3

Dimensional drawing E	<L1 [mm]
2232 ... BX4	50,2
2250 ... BX4	68,2

Dimensional drawing F	<L1 [mm]
3242 ... BX4	60,0
3268 ... BX4	86,0

Dimensional drawing G	<L1 [mm]
3863 ... CR - 2016	82,6
3890 ... CR - 2016	108,6

Characteristics

These incremental encoders with 3 output channels, in combination with the FAULHABER Motors, are used for the indication and control of both shaft velocity and direction of rotation as well as for positioning.

A permanent magnet on the shaft creates a moving magnetic field which is captured using an angular sensor and further processed. At the encoder outputs, two 90° phase-shifted square wave signals are available with up to 1 024 impulses and an index impulse per motor revolution.

The Line Driver version has differential signal outputs (TIA-422). Differential signals reduce ambient interference and are suitable for applications with high ambient interference.

The Line Driver amplifies the encoder signal which means that long cables can be used without signal degradation.
Differential signal outputs must be decoded by the appropriate receiver module. In addition, a suitable line termination resistance (100 ohm) is possibly useful.

The encoder is available in a variety of different resolutions.
The encoder is connected with a ribbon cable.

To view our large range of accessory parts, please refer to the "Accessories" chapter.

© DR. FRITZ FAULHABER GMBH & CO. KG
Specifications subject to change without notice.
www.faulhaber.com

Circuit diagram / Output signals

Output circuit

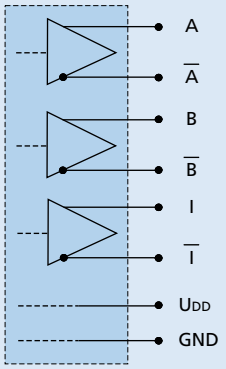

Output signals
with clockwise rotation as seen from the shaft end

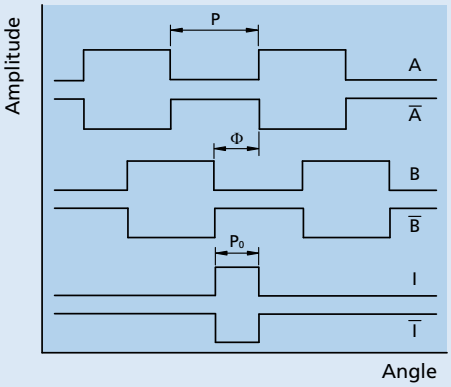

Connector information / Variants

Example product designation: **2444S024B-K1838 IE3-1024L**

Option	Type	Description
3806	Connector 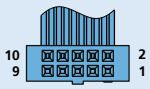	for combination with DC-Motors series CR, CXR and with Brushless DC-Motor series B(S), BP4 and BXT H. Connector variants AWG 28 / PVC ribbon cable with connector EN 60603-13 / DIN-41651.
3589	Connector 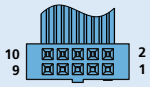	for combination with Brushless DC-Motors series BX4. Connector variants AWG 28 / PVC ribbon cable with connector EN 60603-13 / DIN-41651. Inclusive motor connector 3830
	Resolutions	Resolutions from 1 - 1024 lines per revolution are available by request.

Connection Encoder

No.	Function
1	N.C.
2	UDD
3	GND
4	N.C.
5	Channel $\overline{A}$
6	Channel A
7	Channel $\overline{B}$
8	Channel B
9	Channel $\overline{I}$
10	Channel I

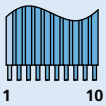

Standard cable
PVC-ribbon cable, 10-AWG 28, 1,27 mm

Caution:
Incorrect lead connection will damage the motor electronics!
In combination with the BX4 brushless DC-servomotors with digital Hall sensors, the sensor supply connections of encoder and motor are connected to each other.

Dimensional drawing A

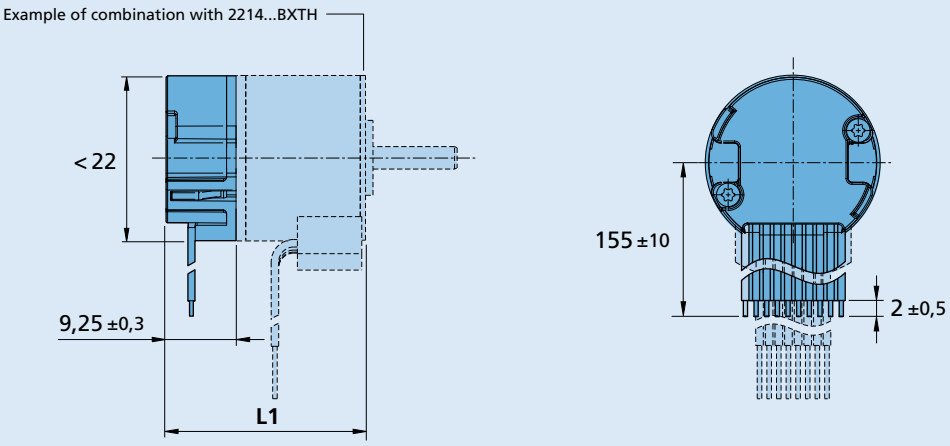

IE3-1024 L

© DR. FRITZ FAULHABER GMBH & CO. KG
Specifications subject to change without notice.
www.faulhaber.com

Dimensional drawing B

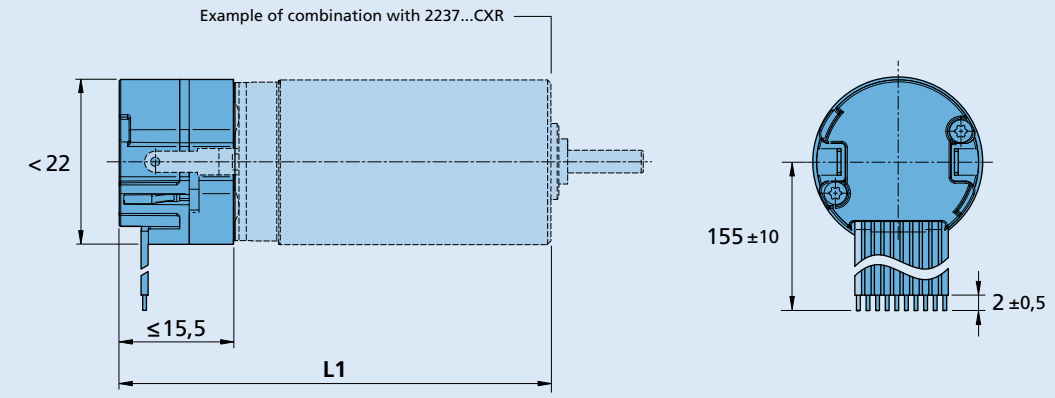

IE3-1024 L

Dimensional drawing C

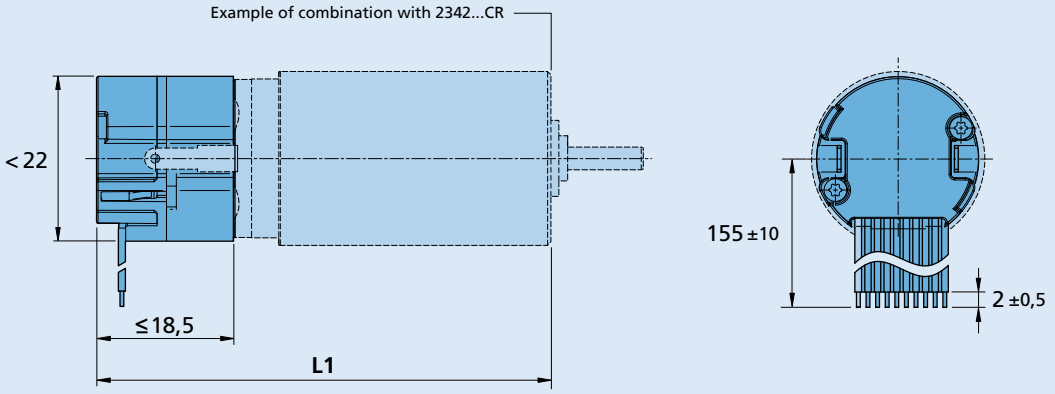

IE3-1024 L

Dimensional drawing D

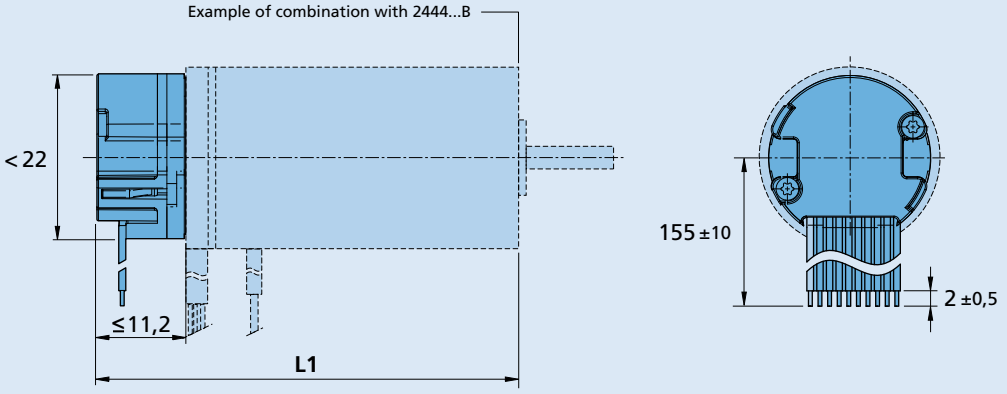

IE3-1024 L

© DR. FRITZ FAULHABER GMBH & CO. KG
Specifications subject to change without notice.
www.faulhaber.com

Dimensional drawing E

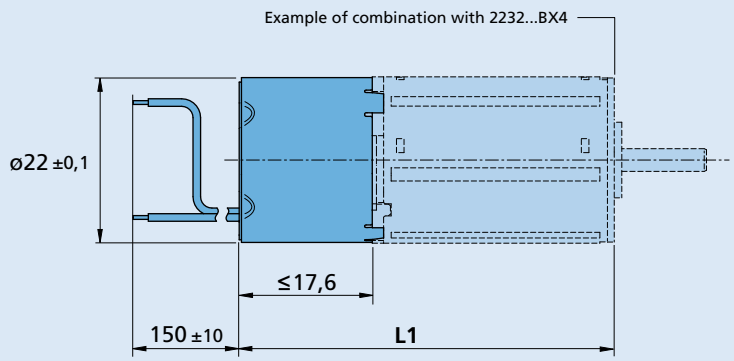

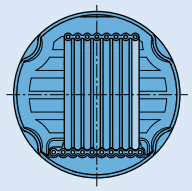

IE3-1024 L

Dimensional drawing F

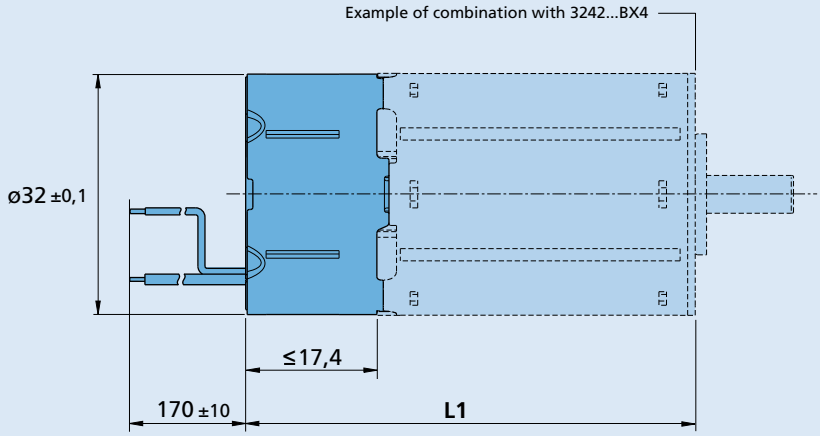

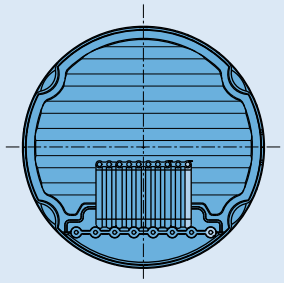

IE3-1024 L

Dimensional drawing G

Scale reduced

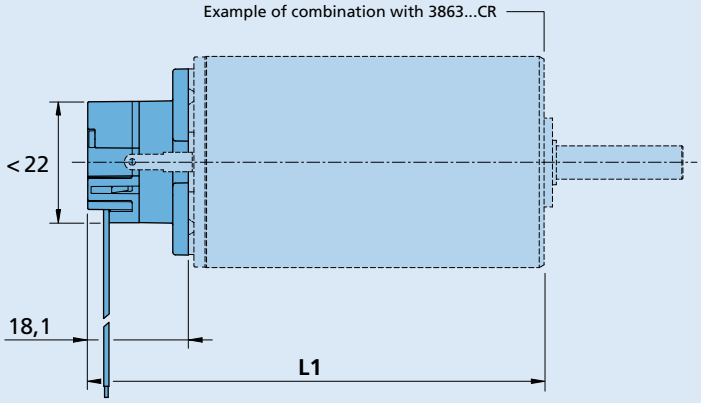

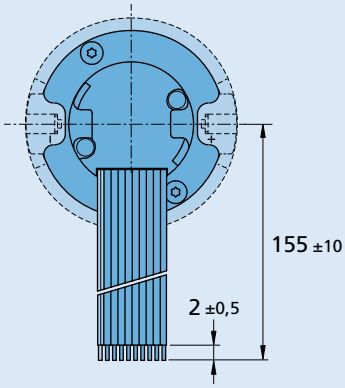

IE3-1024 L

© DR. FRITZ FAULHABER GMBH & CO. KG
Specifications subject to change without notice.
www.faulhaber.com

Encoders

magnetic Encoder, digital outputs,
3 channels, 16 - 4096 lines per revolution

For combination with
Brushless DC-Motors

Series IEF3-4096

	IEF3	-16	-32	-64	-128	-256	-512	-1024	-2048	-4096	
Lines per revolution	*N*	16	32	64	128	256	512	1 024	2 048	4 096	
Frequency range, up to[1]	*f*	5	10	20	40	80	160	320	640	875	kHz
Signal output, square wave		2+1 Index									Channels
Supply voltage	U_{DD}	4,5 ... 5,5									V
Current consumption, typical[2]	I_{DD}	typ. 25, max. 40									mA
Output current, max.[3]	I_{OUT}	2,5									mA
Index Pulse width[4]	P_0	90 ± 45						90 ± 65	90 ± 75		°e
Phase shift, channel A to B	Φ	90 ± 45						90 ± 65	90 ± 75		°e
Signal rise/fall time, max. (C_{LOAD} = 50 pF)	*tr/tf*	0,05 / 0,05									µs
Inertia of sensor magnet	*J*	1,57									gcm²
Operating temperature range		-40 ... +100									°C
Accuracy, typ.		0,5									°m
Repeatability, typ.		0,08									°m
Hysteresis		0,02									°m
Edge spacing, min.		225									ns
Mass, typ.		15,4									g

[1] Velocity (min^{-1}) = *f* (Hz) x 60/*N*
[2] U_{DD} = 5 V: with unloaded outputs
[3] U_{DD} = 5 V: low logic level < 0,4 V, high logic level > 4,5 V: CMOS- and TTL compatible
[4] At 5 000 min^{-1}

For combination with Motor

Dimensional drawing A	**<L1 [mm]**
2214 ... BXT H	21,3
Dimensional drawing B	**<L1 [mm]**
3216 ... BXT H	23,3
Dimensional drawing C	**<L1 [mm]**
4221 ... BXT H	28,3

Characteristics

These incremental encoders with 3 output channels, in combination with the FAULHABER Brushless DC-Motors, are used for the indication and control of both shaft velocity and direction of rotation as well as for positioning.

The encoder is integrated in the Brushless DC-Motors BXT H-Series and extends the overall length by only 6,2 mm.

A segmented magnetic disc provides a magnetic field which is detected and further processed by an angle sensor.

At the encoder outputs, two 90° phase-shifted square wave signals are available with up to 4096 impulses and an index impulse per motor revolution.
The encoder is available with different standard resolutions.

The supply voltage for the encoder and the output signals are interfaced through a ribbon cable, optional with connector.

Details for the Brushless DC-Motors and suitable reduction gearheads are on separate catalogue pages.

To view our large range of accessory parts, please refer to the "Accessories" chapter.

© DR. FRITZ FAULHABER GMBH & CO. KG
Specifications subject to change without notice.
www.faulhaber.com

Circuit diagram / Output signals

Output circuit

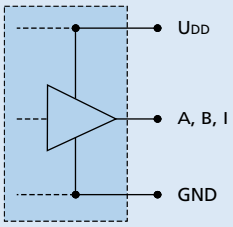

Output signals
with clockwise rotation as seen from the shaft end

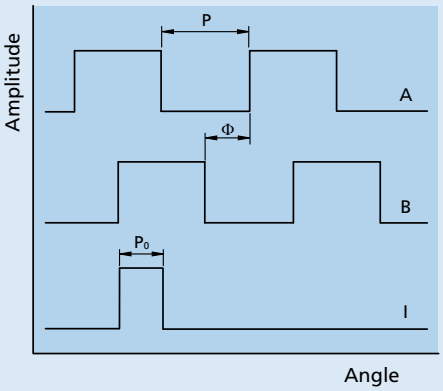

Connector information / Variants

Example product designation: **2214S012BXTH IEF3-4096**

Option	Type	Description
3807	Connector 6 1	for combination with Brushless DC-Flat Motors series BXT H. Connector variants AWG 28 / PVC ribbon cable with connector MOLEX Picoblade 51021-0600, recommended mating connector 53047-0610.
3592	Connector 6 1	for combination with Brushless DC-Flat Motors series BXT H. Connector variants AWG 28 / PVC ribbon cable with connector MOLEX Picoblade 51021-0600, recommended mating connector 53047-0610. Inclusive motor connector 3830

Connection Encoder

No.	Function
1	N.C.
2	Channel I
3	GND
4	UDD
5	Channel B
6	Channel A

Standard cable
PVC-ribbon cable, 6-AWG 28, 1,27 mm

Caution:
Incorrect lead connection will damage the motor electronics!

Dimensional drawing A

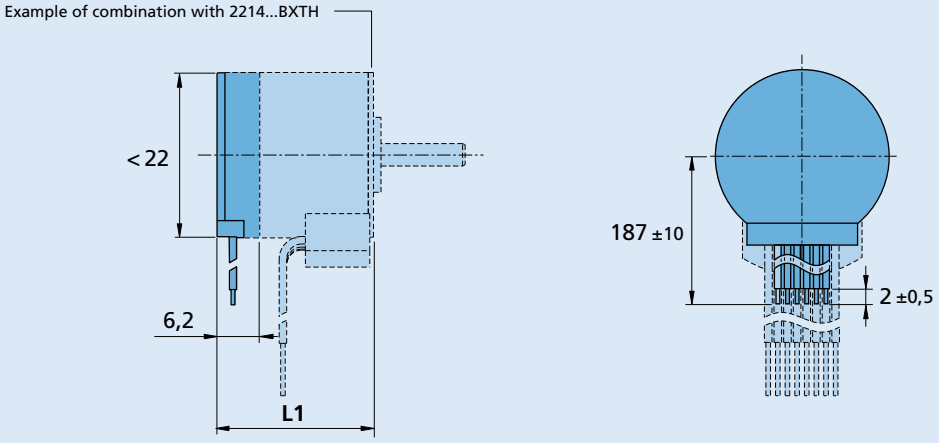

IEF3-4096

For notes on technical data and lifetime performance refer to "Technical Information".
Edition 2021 Dec. 03

Backwards

© DR. FRITZ FAULHABER GMBH & CO. KG
Specifications subject to change without notice.
www.faulhaber.com

Dimensional drawing B

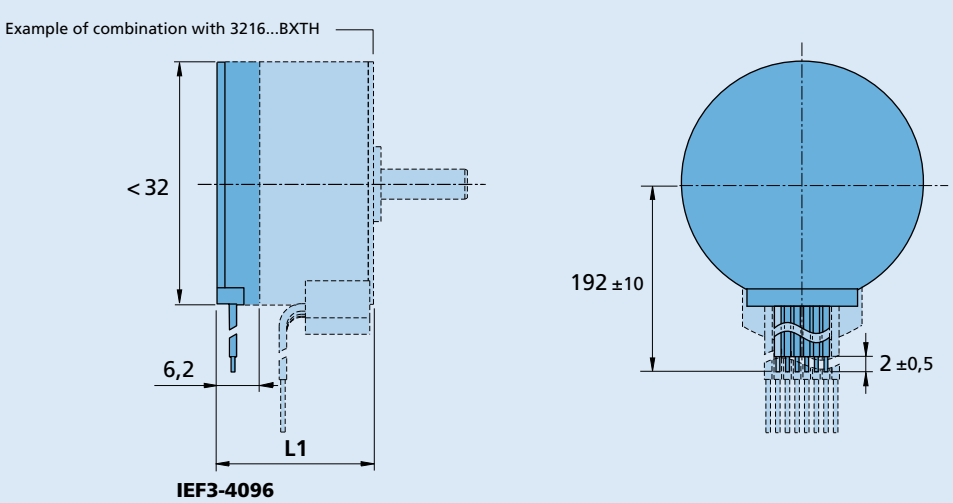

Dimensional drawing C

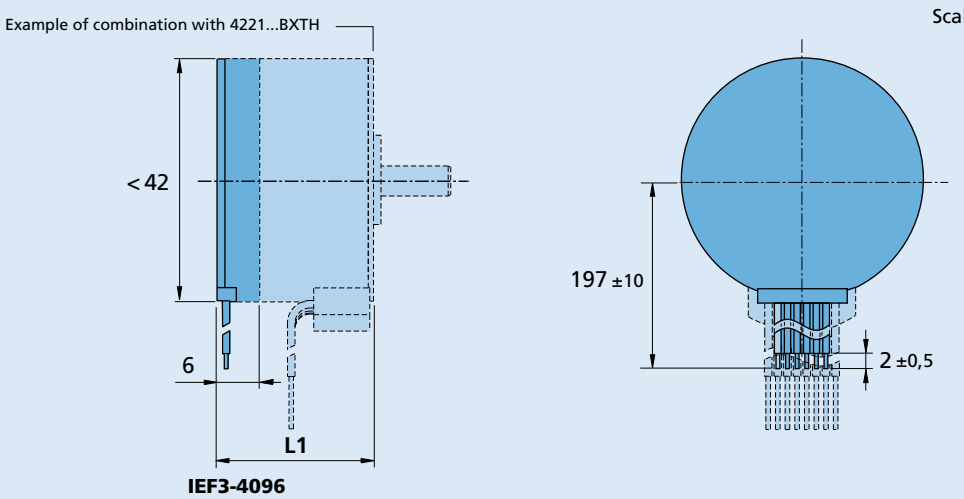

© DR. FRITZ FAULHABER GMBH & CO. KG
Specifications subject to change without notice.
www.faulhaber.com

Encoders

magnetic Encoder, digital outputs, 3 channels,
16 - 4096 lines per revolution, Line Driver

For combination with
Brushless DC-Motors

Series IEF3-4096 L

	IEF3	-16 L	-32 L	-64 L	-128 L	-256 L	-512 L	-1024 L	-2048 L	-4096 L	
Lines per revolution	*N*	16	32	64	128	256	512	1 024	2 048	4 096	
Frequency range, up to[1]	*f*	5	10	20	40	80	160	320	640	875	kHz
Signal output, square wave		2+1 Index and complementary outputs									Channels
Supply voltage	U_{DD}	4,5 ... 5,5									V
Current consumption, typical[2]	I_{DD}	typ. 25, max. 40									mA
Index Pulse width[3]	P_0	90 ± 45						90 ± 65	90 ± 75		°e
Phase shift, channel A to B	Φ	90 ± 45						90 ± 65	90 ± 75		°e
Inertia of sensor magnet	*J*	1,57									gcm²
Operating temperature range		-40 ... +100									°C
Accuracy, typ.		0,5									°m
Repeatability, typ.		0,08									°m
Hysteresis		0,02									°m
Edge spacing, min.		225									ns
Mass, typ.		16,8									g

[1] Velocity (min^{-1}) = *f* (Hz) x 60/*N*
[2] U_{DD} = 5 V: with unloaded outputs
[3] At 5 000 min^{-1}

Note: The output signals are TIA-422 compatible.
Examples of Line Driver Receivers: ST26C32AB (STM), AM26C32 (TI).

For combination with Motor

Dimensional drawing A	<L1 [mm]
2214 ... BXT H	21,3

Dimensional drawing B	<L1 [mm]
3216 ... BXT H	23,3

Dimensional drawing C	<L1 [mm]
4221 ... BXT H	28,3

Characteristics

These incremental encoders with 3 output channels, in combination with the FAULHABER Brushless DC-Motors, are used for the indication and control of both shaft velocity and direction of rotation as well as for positioning.

The encoder is integrated in the Brushless DC-Motors BXT H-Series and extends the overall length by only 6,2 mm.

A segmented magnetic disc provides a magnetic field which is detected and further processed by an angle sensor.

At the encoder outputs, two 90° phase-shifted square wave signals are available with up to 4096 impulses and an index impulse per motor revolution.

The Line Driver version has differential signal outputs (TIA-422). Differential signals reduce ambient interference and are suitable for applications with high ambient interference.

The Line Driver amplifies the encoder signal which means that long cables can be used without signal degradation.
Differential signal outputs must be decoded by the appropriate receiver module. In addition, a suitable line termination resistance (100 ohm) is possibly useful.

The supply voltage for the encoder and the output signals are interfaced through a ribbon cable, optional with connector.

Details for the Brushless DC-Motors and suitable reduction gearheads are on separate catalogue pages.

To view our large range of accessory parts, please refer to the "Accessories" chapter.

© DR. FRITZ FAULHABER GMBH & CO. KG
Specifications subject to change without notice.
www.faulhaber.com

Circuit diagram / Output signals

Output circuit

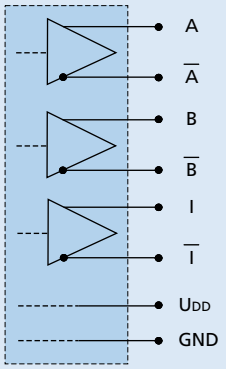

Output signals
with clockwise rotation as seen from the shaft end

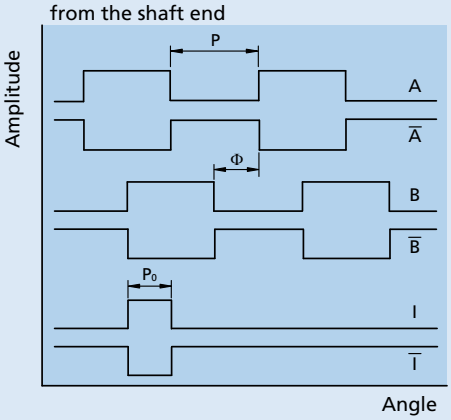

Connector information / Variants

Example product designation: **2214S012BXTH IEF3-4096L**

Option	Type	Description
3806	Connector 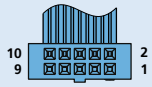	for combination with Brushless DC-Flat Motors series BXT H. Connector variants AWG 28 / PVC ribbon cable with connector EN 60603-13 / DIN-41651.
3589	Connector 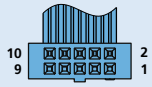	for combination with Brushless DC-Flat Motors series BXT H. Connector variants AWG 28 / PVC ribbon cable with connector EN 60603-13 / DIN-41651. Inclusive motor connector 3830

Connection Encoder

No.	Function
1	N.C.
2	UDD
3	GND
4	N.C.
5	Channel $\overline{A}$
6	Channel A
7	Channel $\overline{B}$
8	Channel B
9	Channel $\overline{I}$
10	Channel I

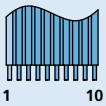

Standard cable
PVC-ribbon cable, 10-AWG 28, 1,27 mm

Caution:
Incorrect lead connection will damage the motor electronics!

Dimensional drawing A

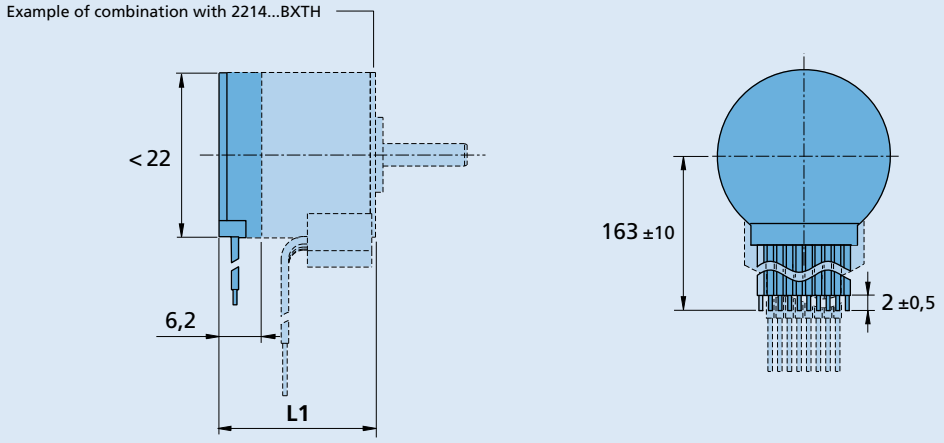

IEF3-4096L

For notes on technical data and lifetime performance refer to "Technical Information".
Edition 2022 May 16

Backwards

© DR. FRITZ FAULHABER GMBH & CO. KG
Specifications subject to change without notice.
www.faulhaber.com

Dimensional drawing B

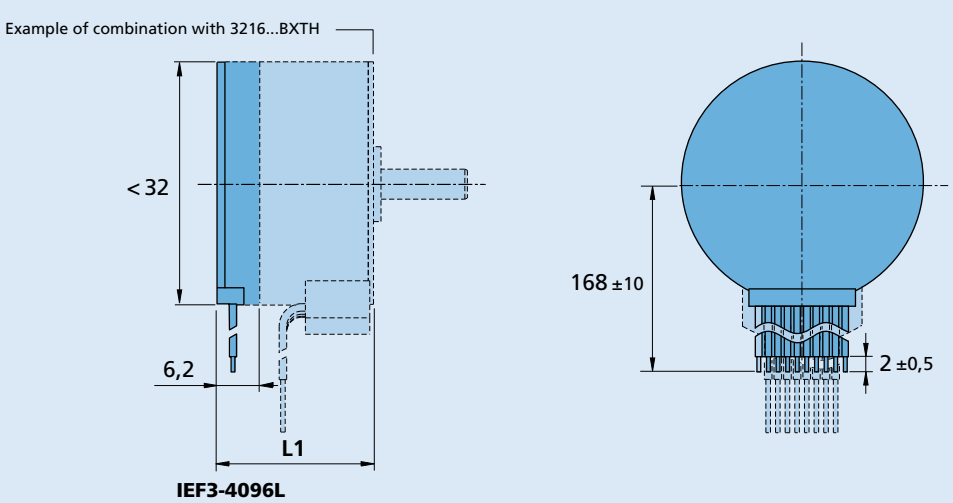

Dimensional drawing C

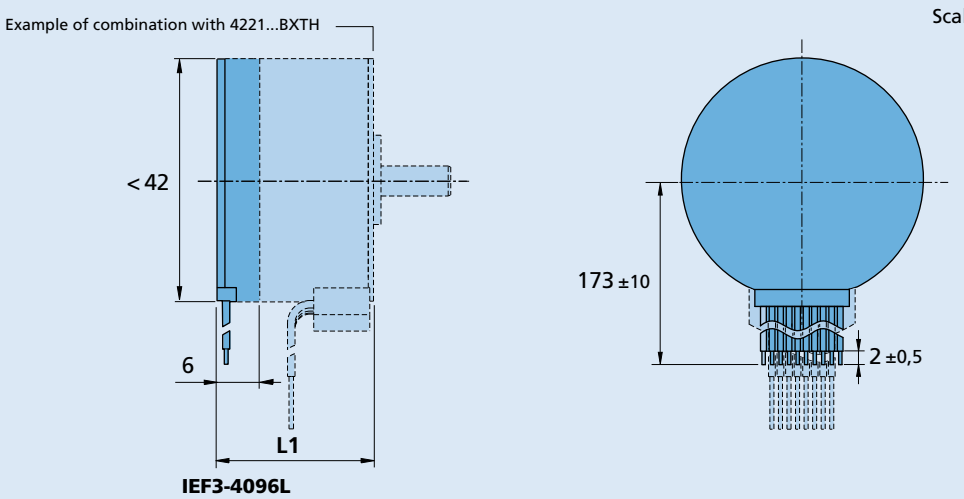

© DR. FRITZ FAULHABER GMBH & CO. KG
Specifications subject to change without notice.
www.faulhaber.com

Encoders

magnetic Encoder, digital outputs,
3 channels, 256 - 4096 lines per revolution

For combination with
DC-Micromotors

Series IEH3-4096

		IEH3-256	IEH3-512	IEH3-1024	IEH3-2048	IEH3-4096	
Lines per revolution	*N*	256	512	1 024	2 048	4 096	
Frequency range, up to[1]	*f*	80	160	320	640	875	kHz
Signal output, square wave		2+1 Index					Channels
Supply voltage	U_{DD}	4,5 ... 5,5					V
Current consumption, typical[2]	I_{DD}	typ. 25, max. 40					mA
Output current, max.[3]	I_{OUT}	2,5					mA
Index Pulse width[4]	P_0	90 ± 45		90 ± 65	90 ± 75		°e
Phase shift, channel A to B[4]	Φ	90 ± 45		90 ± 65	90 ± 75		°e
Signal rise/fall time, max. (C_{LOAD} = 50 pF)	*tr/tf*	0,05 / 0,05					µs
Inertia of sensor magnet	*J*	0,11					gcm²
Operating temperature range		-40 ... +100					°C

[1] Velocity (min⁻¹) = *f* (Hz) x 60/*N*
[2] U_{DD} = 5 V: with unloaded outputs
[3] U_{DD} = 5 V: low logic level < 0,4 V, high logic level > 4,6 V: CMOS- and TTL compatible
[4] At 5 000 min⁻¹

For combination with Motor

Dimensional drawing A	<L1 [mm]
1336 ... CXR - 123	47,5

Dimensional drawing B	<L1 [mm]
1516 ... SR	18,2
1524 ... SR	26,2
1717 ... SR	19,4
1724 ... SR	26,4
2224 ... SR	26,6
2232 ... SR	34,6

Dimensional drawing C	<L1 [mm]
1727 ... CXR - 123	38,2
1741 ... CXR - 123	52,2

Characteristics

These incremental encoders with 3 output channels, in combination with the FAULHABER Motors, are used for the indication and control of both shaft velocity and direction of rotation as well as for positioning.

The encoder is integrated in the DC-Micromotors SR-Series and extends the overall length by only 1,4 mm.

A segmented magnetic disc provides a magnetic field which is detected and further processed by an angle sensor.

The output signals of both channels consist of a square wave signal with 90° phase shift and up to 4096 impulses and an index impulse per motor revolution.
The encoder is available with different standard resolutions.

The supply voltage for the encoder and the DC-Micromotor as well as the two channel output signals are interfaced through a ribbon cable with connector.

Details for the DC-Micromotors and suitable reduction gearheads are on separate catalogue pages.

To view our large range of accessory parts, please refer to the "Accessories" chapter.

© DR. FRITZ FAULHABER GMBH & CO. KG
Specifications subject to change without notice.
www.faulhaber.com

Circuit diagram / Output signals

Output circuit

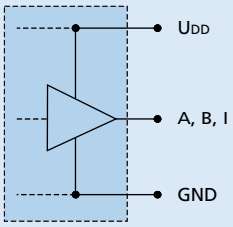

Output signals
with clockwise rotation as seen from the shaft end

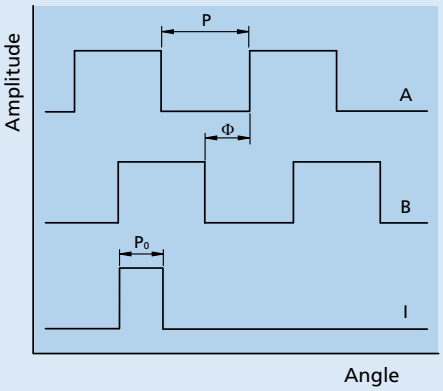

Connector information / Variants

Example product designation: **1516T006SR IEH3-4096**

Option	Type	Description

Connection Encoder and Motor

No.	Function
1	N.C.
2	Motor – *
3	Motor + *
4	GND
5	UDD
6	Channel B
7	Channel A
8	Channel I

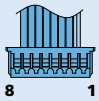

Cable
PVC-ribbon cable, 8-AWG 28, 0,09 mm²

Recommended connector
Molex PicoBlade, grid 1,25 mm

* **Note:** DC-Micromotors series CXR have separate motor leads.

Dimensional drawing A

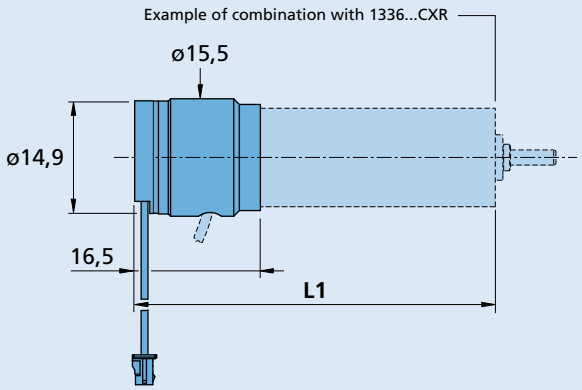

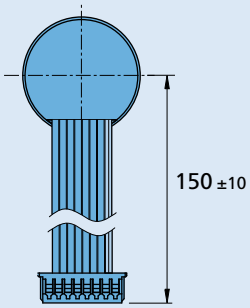

IEH3-4096

© DR. FRITZ FAULHABER GMBH & CO. KG
Specifications subject to change without notice.
www.faulhaber.com

Dimensional drawing B

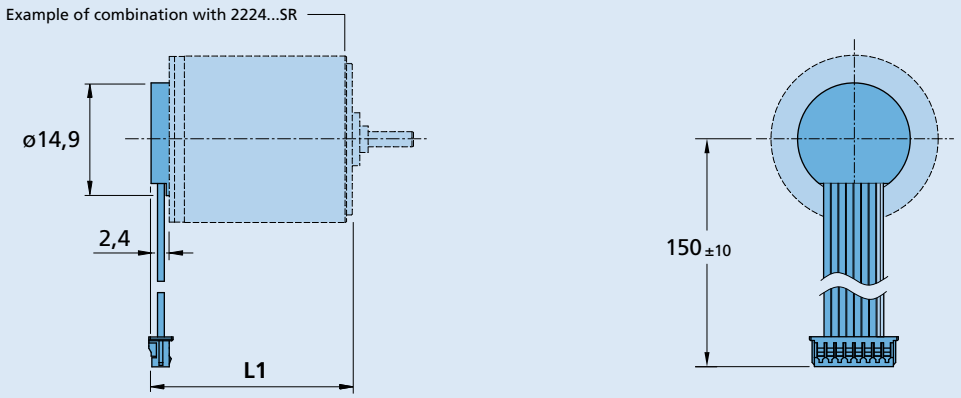

IEH3-4096

Dimensional drawing C

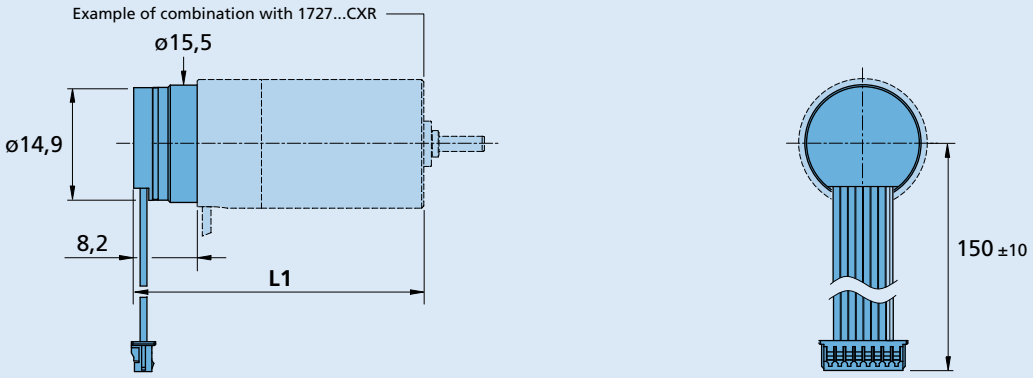

IEH3-4096

© DR. FRITZ FAULHABER GMBH & CO. KG
Specifications subject to change without notice.
www.faulhaber.com

Encoders

magnetic Encoder, digital outputs, 3 channels,
256 - 4096 lines per revolution, Line Driver

For combination with
DC-Micromotors

Series IEH3-4096L

		IEH3-256L	IEH3-512L	IEH3-1024L	IEH3-2048L	IEH3-4096L	
Lines per revolution	*N*	256	512	1 024	2 048	4 096	
Frequency range, up to[1]	*f*	80	160	320	640	875	kHz
Signal output, square wave		2+1 Index and complementary outputs					Channels
Supply voltage	U_{DD}	4,5 ... 5,5					V
Current consumption, typical[2]	I_{DD}	typ. 25, max. 43					mA
Index Pulse width[3]	P_0	90 ± 45		90 ± 65	90 ± 75		°e
Phase shift, channel A to B[3]	Φ	90 ± 45		90 ± 65	90 ± 75		°e
Inertia of sensor magnet	*J*	0,11					gcm²
Operating temperature range		-40 ... +100					°C
Accuracy, typ.		0,8					°m
Repeatability, typ.		0,07					°m
Hysteresis		0,35					°m
Edge spacing, min.		225					ns
Mass, typ.		5					g

[1] Velocity (min^{-1}) = *f* (Hz) x 60/*N*
[2] U_{DD} = 5 V: with unloaded outputs
[3] At 5 000 min^{-1}

Note: The output signals are TIA-422 compatible.
Examples of Line Driver Receivers: ST26C32AB (STM), AM26C32 (TI).

For combination with Motor

Dimensional drawing A	**<L1 [mm]**
1336 ... CXR - 123	47,5

Dimensional drawing B	**<L1 [mm]**
1516 ... SR	18,2
1524 ... SR	26,2
1717 ... SR	19,4
1724 ... SR	26,4
2224 ... SR	26,6
2232 ... SR	34,6

Dimensional drawing C	**<L1 [mm]**
1727 ... CXR - 123	38,2
1741 ... CXR - 123	52,2

Characteristics

These incremental encoders with 3 output channels, in combination with the FAULHABER Motors, are used for the indication and control of both shaft velocity and direction of rotation as well as for positioning.

The encoder is integrated in the DC-Micromotors SR-Series and extends the overall length by only 1,4 mm with 3 output channels and Line Driver.

A segmented magnetic disc provides a magnetic field which is detected and further processed by an angle sensor.
The output signals of both channels consist of a square wave signal with 90° phase shift and up to 4096 impulses and an index impulse per motor revolution.

The Line Driver amplifies the encoder signal which means that long cables can be used without signal degradation.
Differential signal outputs must be decoded by the appropriate receiver module. In addition, a suitable line termination resistance (100 ohm) is possibly useful.

The supply voltage for the encoder and the DC-Micromotor as well as the two channel output signals are interfaced through a ribbon cable with connector.

Details for the DC-Micromotors and suitable reduction gearheads are on separate catalogue pages.

To view our large range of accessory parts, please refer to the "Accessories" chapter.

© DR. FRITZ FAULHABER GMBH & CO. KG
Specifications subject to change without notice.
www.faulhaber.com

Circuit diagram / Output signals

Output circuit

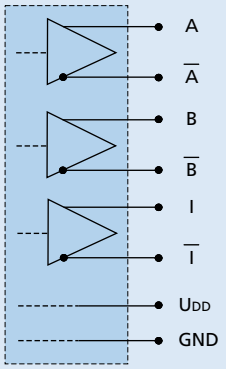

Output signals
with clockwise rotation as seen from the shaft end

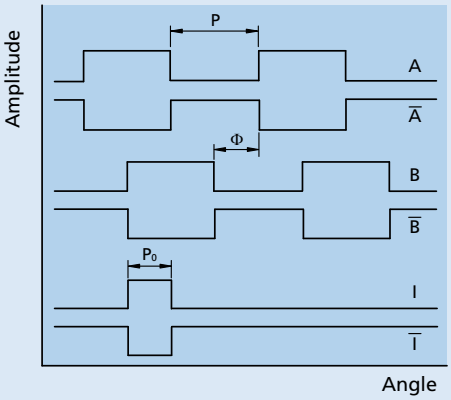

Connector information / Variants

Example product designation: **1516T006SR IEH3-4096L**

Option	Type	Description

Connection Encoder and Motor

No.	Function
1	Motor - *
2	UDD
3	GND
4	Motor + *
5	Channel $\overline{A}$
6	Channel A
7	Channel $\overline{B}$
8	Channel B
9	Channel $\overline{I}$
10	Channel I

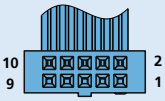

Cable
PVC-ribbon cable, 10-AWG 28, 0,09 mm²

Recommended connector
EN 60603-13 / DIN-41651

* **Note:** DC-Micromotors series CXR have separate motor leads.

Dimensional drawing A

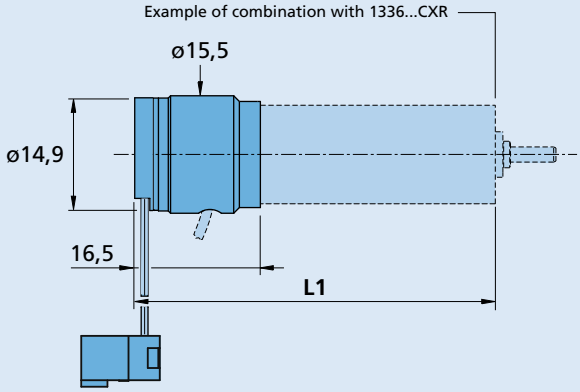

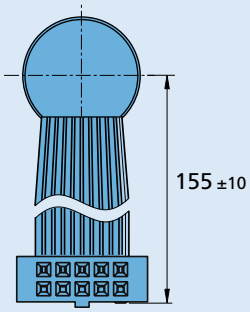

IEH3-4096L

© DR. FRITZ FAULHABER GMBH & CO. KG
Specifications subject to change without notice.
www.faulhaber.com

Dimensional drawing B

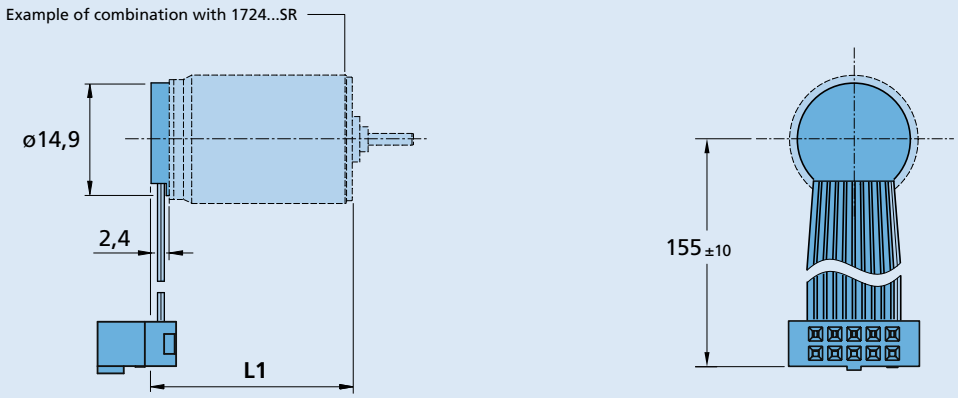

IEH3-4096L

Dimensional drawing C

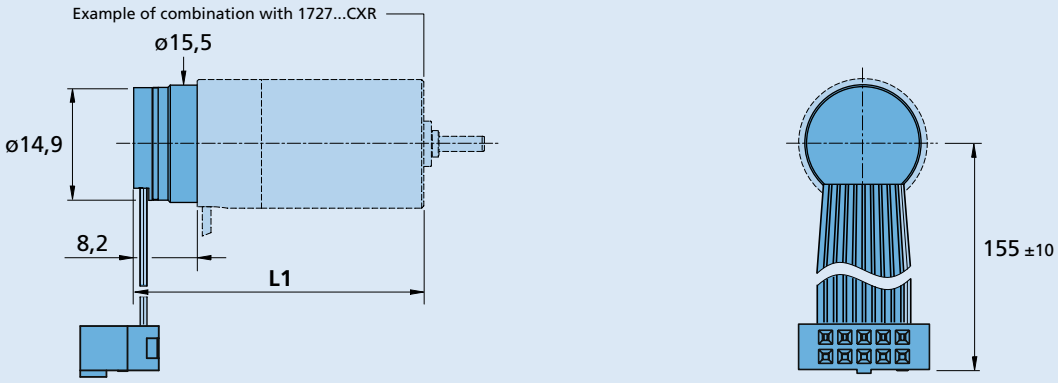

IEH3-4096L

© DR. FRITZ FAULHABER GMBH & CO. KG
Specifications subject to change without notice.
www.faulhaber.com

NEW

FAULHABER

Encoders

magnetic Encoder, digital outputs,
3 channels, 16 - 4096 lines per revolution

For combination with
DC-Micromotors
Stepper Motors

Series IEP3-4096

	IEP3	-16	-32	-64	-128	-256	-512	-1024	-2048	-4096	
Lines per revolution[1]	*N*	16	32	64	128	256	512	1 024	2 048	4 096	
Frequency range, up to[1]	*f*	5	10	17	35	70	140	275	550	1 000	kHz
Signal output, square wave		2+1 Index									Channels
Supply voltage[2]	U_{DD}	3,0 ... 3,6 / 4,5 ... 5,5									V
Current consumption, typical[3]	I_{DD}	typ. 25, max. 34									mA
Output current, max.[4]	I_{OUT}	4									mA
Index Pulse width[5]	P_0	90 ± 25							90 ± 45		°e
Phase shift, channel A to B[5]	Φ	90 ± 25							90 ± 45		°e
Signal rise/fall time, max. (C_{LOAD} = 50 pF)	*tr*/*tf*	0,1 / 0,1									µs
Inertia of sensor magnet	*J*	0,01									gcm²
Operating temperature range		-40 ... +100									°C
Accuracy, typ.		0,3									°m
Repeatability, typ.		0,05									°m
Hysteresis		0,08							0,04		°m
Edge spacing, min.		125									ns
Mass, typ.		2,3									g

[1] Velocity (min⁻¹) = *f* (Hz) x 60/*N*
[2] Encoder supports both voltage ranges 3,0 ... 3,6 V and 4,5 ... 5,5 V
[3] U_{DD} = 3,3 or 5 V: with unloaded outputs
[4] U_{DD} = 3,3 / 5 V: low logic level < 0,4 / 0,4 V, high logic level > 2,8 / 4,5 V: CMOS compatible
[5] At 5 000 min⁻¹

For combination with Motor

Dimensional drawing A	<L1 [mm]
0816 ... SR - K4180	25,3
1016 ... SR - K4180	25,3
1024 ... SR - K4180	33,3

Dimensional drawing B	<L1 [mm]
AM0820	24,0
AM1020	26,1

Dimensional drawing C	<L1 [mm]
AM1524	27,3

Characteristics

These incremental encoders with 3 output channels, in combination with the FAULHABER Motors, are used for the indication and control of both shaft velocity and direction of rotation as well as for positioning.

A permanent magnet on the shaft creates a moving magnetic field which is captured using an angular sensor and further processed.

At the encoder outputs, two 90° phase-shifted square wave signals are available with up to 4.096 impulses as standard and up to 10.000 impulses per request and an index impulse per motor revolution.

The encoder has a high accuracy and a high repeatability for positioning applications.

The encoder is connected with a ribbon cable. To view our large range of accessory parts, please refer to the “Accessories” chapter.

© DR. FRITZ FAULHABER GMBH & CO. KG
Specifications subject to change without notice.
www.faulhaber.com

Circuit diagram / Output signals

Output circuit

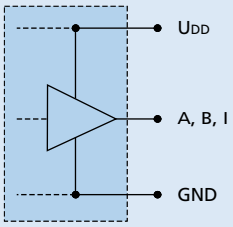

Output signals
with clockwise rotation as seen from the shaft end

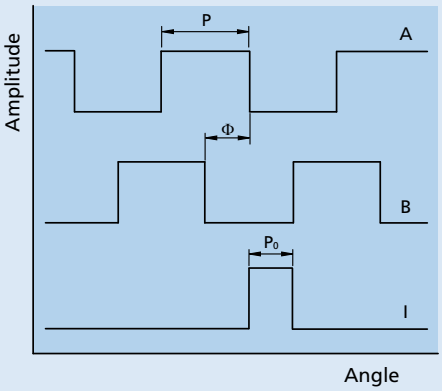

Connector information / Variants

Example product designation: **0816K012SR K4180 IEP3-4096 K4453**

Option	Type	Description
K4453	Ribbon cable PVC	For combination with DC-Motors series SR, encoder ribbon cable PVC and motor single leads PVC, length 50 mm
K4454	Ribbon cable PVC	For combination with DC-Motors series SR, encoder ribbon cable PVC and motor single leads PVC, length 100 mm
K4455	Ribbon cable FEP	For combination with DC-Motors series SR, encoder ribbon cable FEP and motor single leads PTFE, length 150 mm
K4456	Connector 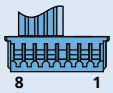	For combination with DC-Motors series SR, connector variant with MOLEX Picoblade 51021-0800, recommended mating connector 51047-0800
K4483	Temperature range	For combination with DC-Motors series SR, up to 125°C, with encoder ribbon cable FEP and motor single leads PTFE, length 150 mm
	Resolutions	Resolutions from 1 - 10 000 lines per revolution are available by request.

Connection Encoder

Standard

No.	Function
1	GND
2	UDD
3	Channel B
4	Channel A
5	Channel I

Option K4456

No.	Function
1	N.C.
2	N.C.
3	N.C.
4	GND
5	UDD
6	Channel B
7	Channel A
8	Channel I

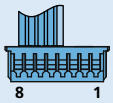

Standard cable
PVC-ribbon cable, 5-AWG 28, 1 mm

Caution:
Incorrect lead connection will damage the electronics!

Dimensional drawing A

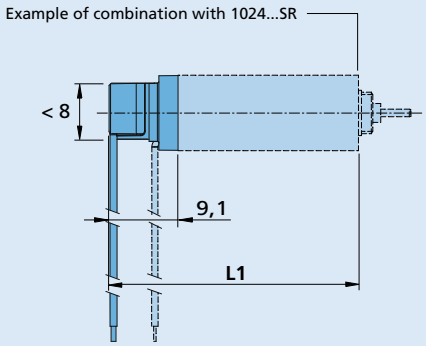

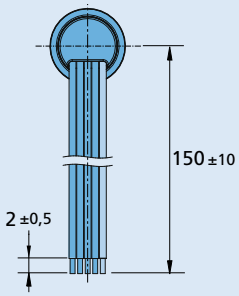

IEP3-4096

© DR. FRITZ FAULHABER GMBH & CO. KG
Specifications subject to change without notice.
www.faulhaber.com

Dimensional drawing B

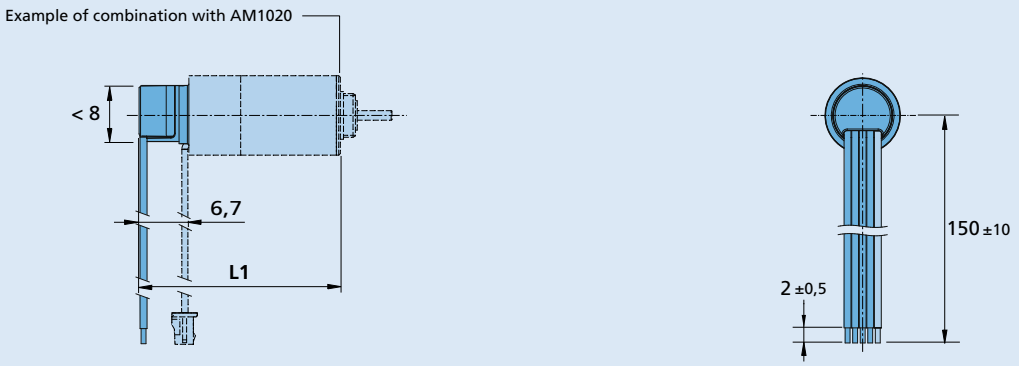

IEP3-4096

Dimensional drawing C

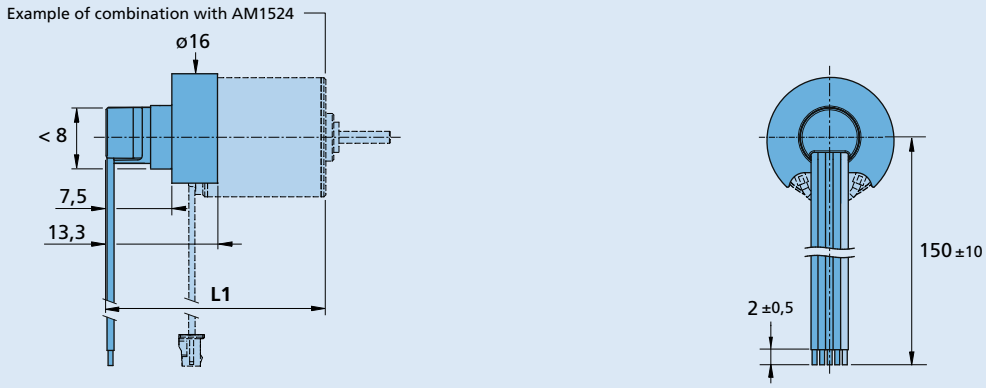

IEP3-4096

© DR. FRITZ FAULHABER GMBH & CO. KG
Specifications subject to change without notice.
www.faulhaber.com

Encoders

optical Encoder, digital outputs,
3 channels, 250 - 500 lines per revolution

For combination with
Brushless DC-Motors
DC-Micromotors

Series IERS3-500

		IERS3-250	IERS3-500	
Lines per revolution	N	250	500	
Frequency range, up to[1]	f	55	110	kHz
Signal output, square wave		2+1 Index		Channels
Supply voltage	U_{DD}	4,5 ... 5,5		V
Current consumption, typical[2]	I_{DD}	typ. 17, max. 25		mA
Output current, max.[3]	I_{OUT}	4		mA
Index Pulse width	P_0	90 ± 15		°e
Phase shift, channel A to B	Φ	90 ± 20		°e
Signal rise/fall time, max. (C_{LOAD} = 50 pF)	tr/tf	0,1 / 0,1		µs
Inertia of code disc	J	0,14		gcm²
Operating temperature range		-20 ... +85		°C
Accuracy, typ.		0,3		°m
Repeatability, typ.		0,05		°m
Hysteresis		0,05		°m
Edge spacing, min.		600		ns
Mass, typ.		8		g

[1] Velocity (min^{-1}) = f (Hz) x 60/N
[2] U_{DD} = 5 V: with unloaded outputs
[3] U_{DD} = 5 V: low logic level < 0,4 V, high logic level > 2,4 V: TTL compatible

For combination with Motor

Dimensional drawing A	<L1 [mm]	Dimensional drawing D	<L1 [mm]
2214 ... BXT H	26,8	3863 ... CR - 2016	82,6
3216 ... BXT H	28,7	3890 ... CR - 2016	108,6
4221 ... BXT H	34,0		
Dimensional drawing B	**<L1 [mm]**		
2237 ... CXR	52,5		
2264 ... BP4	79,1		
3274 ... BP4	90,8		
Dimensional drawing C	**<L1 [mm]**		
2342 ... CR	60,5		
2642 ... CXR	60,5		
2642 ... CR	60,5		
2657 ... CXR	75,5		
2657 ... CR	75,5		
2668 ... CR	86,5		
3242 ... CR	60,5		
3257 ... CR	75,5		
3272 ... CR	90,5		

Characteristics

These incremental encoders with 3 output channels, in combination with the FAULHABER Motors, are used for the indication and control of both shaft velocity and direction of rotation as well as for positioning.

With a reflective code disc two square wave signals with 90° phase shift with up to 500 lines per revolution and one index impulse per motor revolution are generated.

The optical measurement principle allows high accuracy and repeatability for positioning applications.

The encoder is connected via a ribbon cable. The pins are compatible to the FAULHABER Encoder IE3.

To view our large range of accessory parts, please refer to the "Accessories" chapter.

© DR. FRITZ FAULHABER GMBH & CO. KG
Specifications subject to change without notice.
www.faulhaber.com

Circuit diagram / Output signals

Output circuit

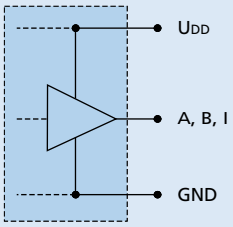

Output signals
with clockwise rotation as seen from the shaft end

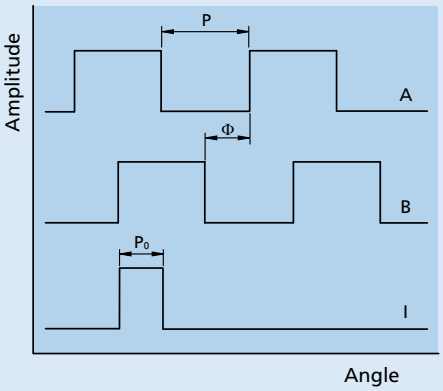

Connector information / Variants

Example product designation: **3863H024CR IERS3-250 3807**

Option	Type	Description
3807	Connector	for combination with DC-Motors series CR, CXR and with Brushless DC-Motor series BP4 and BXT H. Connector variants AWG 28 / PVC ribbon cable with connector MOLEX Picoblade 51021-0600, recommended mating connector 53047-0610.

Connection Encoder

No.	Function
1	N.C.
2	Channel I
3	GND
4	UDD
5	Channel B
6	Channel A

Standard cable
PVC-ribbon cable, 6-AWG 28, 1,27 mm

Caution:
Incorrect lead connection will damage the motor electronics!

Dimensional drawing A

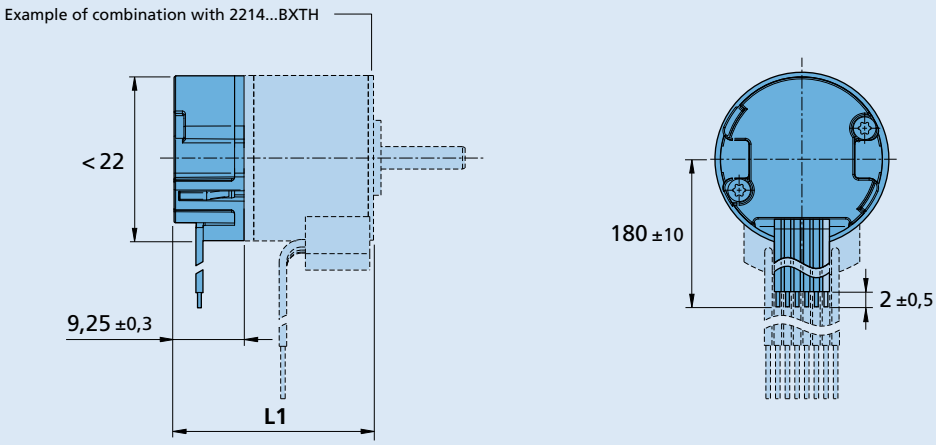

IERS3-500

© DR. FRITZ FAULHABER GMBH & CO. KG
Specifications subject to change without notice.
www.faulhaber.com

Dimensional drawing B

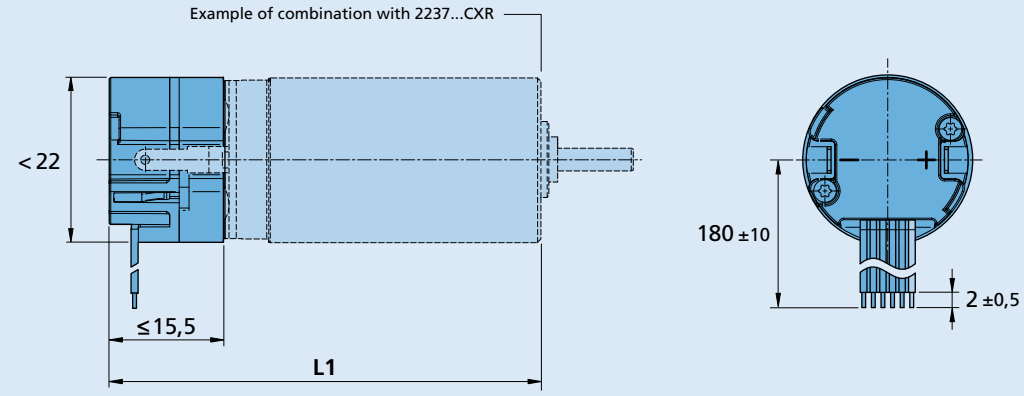

IERS3-500

Dimensional drawing C

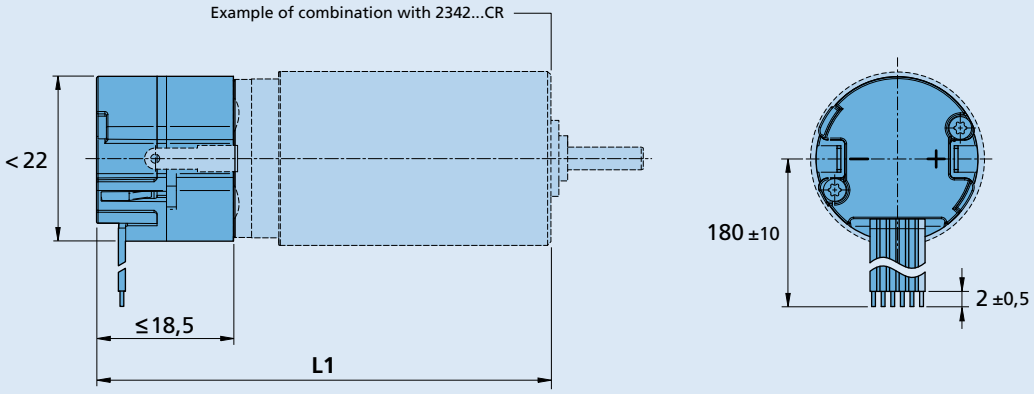

IERS3-500

Dimensional drawing D

Scale reduced

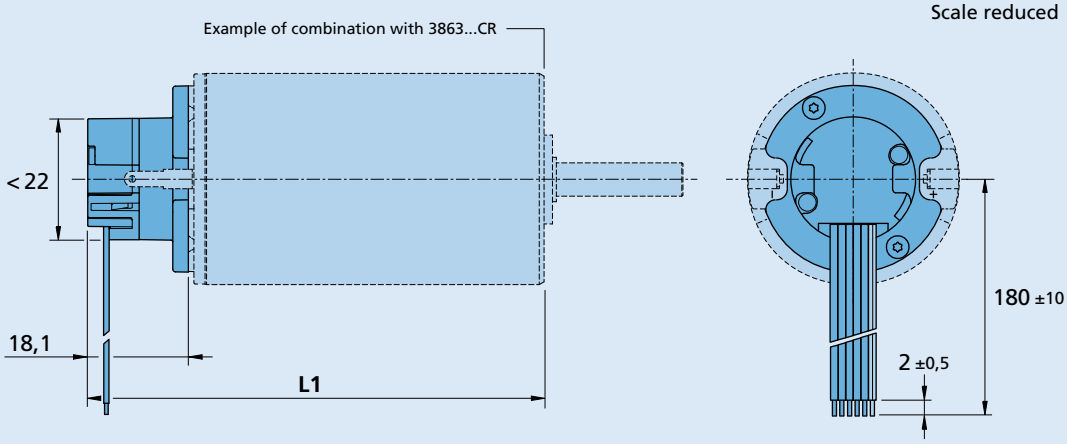

IERS3-500

© DR. FRITZ FAULHABER GMBH & CO. KG
Specifications subject to change without notice.
www.faulhaber.com

Encoders

optical Encoder, digital outputs, 3 channels,
250 - 500 lines per revolution, Line Driver

For combination with
Brushless DC-Motors
DC-Micromotors

Series IERS3-500 L

		IERS3-250 L	IERS3-500 L	
Lines per revolution	*N*	250	500	
Frequency range, up to[1]	*f*	55	110	kHz
Signal output, square wave		2+1 Index and complementary outputs		Channels
Supply voltage	U_{DD}	4,5 ... 5,5		V
Current consumption, typical[2]	I_{DD}	typ. 17, max. 25		mA
Index Pulse width	P_0	90 ± 15		°e
Phase shift, channel A to B	Φ	90 ± 20		°e
Inertia of code disc	*J*	0,14		gcm²
Operating temperature range		-20 ... +85		°C
Accuracy, typ.		0,3		°m
Repeatability, typ.		0,05		°m
Hysteresis		0,05		°m
Edge spacing, min.		600		ns
Mass, typ.		8		g

[1] Velocity (min⁻¹) = *f* (Hz) x 60/*N*
[2] U_{DD} = 5 V: with unloaded outputs

Note: The output signals are TIA-422 compatible.
Examples of Line Driver Receivers: ST26C32AB (STM), AM26C32 (TI).

For combination with Motor

Dimensional drawing A	<L1 [mm]	Dimensional drawing D	<L1 [mm]
2214 ... BXT H	26,8	3863 ... CR - 2016	82,6
3216 ... BXT H	28,7	3890 ... CR - 2016	108,6
4221 ... BXT H	34,0		

Dimensional drawing B	<L1 [mm]
2237 ... CXR	52,5
2264 ... BP4	79,1
3274 ... BP4	90,8

Dimensional drawing C	<L1 [mm]
2342 ... CR	60,5
2642 ... CXR	60,5
2642 ... CR	60,5
2657 ... CXR	75,5
2657 ... CR	75,5
2668 ... CR	86,5
3242 ... CR	60,5
3257 ... CR	75,5
3272 ... CR	90,5

Characteristics

These incremental encoders with 3 output channels, in combination with the FAULHABER Motors, are used for the indication and control of both shaft velocity and direction of rotation as well as for positioning.

With a reflective code disc two square wave signals with 90° phase shift with up to 500 lines per revolution and one index impulse per motor revolution are generated.
The optical measurement principle allows high accuracy and repeatability for positioning applications.

The Line Driver version has differential signal outputs (TIA-422). Differential signals reduce ambient interference and are suitable for applications with high ambient interference.

The Line Driver amplifies the encoder signal which means that long cables can be used without signal degradation.
Differential signal outputs must be decoded by the appropriate receiver module. In addition, a suitable line termination resistance (100 ohm) is possibly useful.

The encoder is connected via a ribbon cable. The pins are compatible to the FAULHABER Encoder IE3 L.

To view our large range of accessory parts, please refer to the "Accessories" chapter.

© DR. FRITZ FAULHABER GMBH & CO. KG
Specifications subject to change without notice.
www.faulhaber.com

Circuit diagram / Output signals

Output circuit

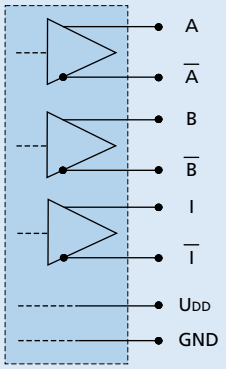

Output signals
with clockwise rotation as seen from the shaft end

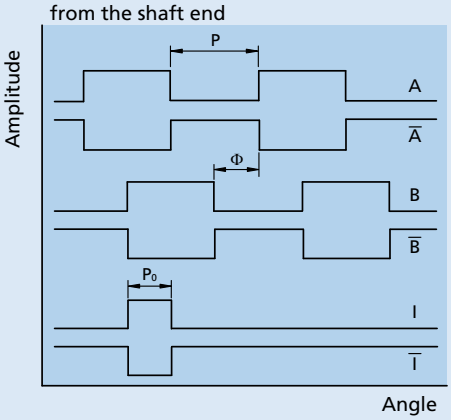

Connector information / Variants

Example product designation: **3863H024CR IERS3-250L 3806**

Option	Type	Description
3806	Connector 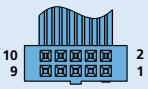	for combination with DC-Motors series CR, CXR and with Brushless DC-Motor series BP4 and BXT H. Connector variants AWG 28 / PVC ribbon cable with connector EN 60603-13 / DIN-41651.

Connection Encoder

No.	Function
1	N.C.
2	UDD
3	GND
4	N.C.
5	Channel $\overline{A}$
6	Channel A
7	Channel $\overline{B}$
8	Channel B
9	Channel $\overline{I}$
10	Channel I

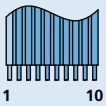

Standard cable
PVC-ribbon cable, 10-AWG 28, 1,27 mm

Caution:
Incorrect lead connection will damage the motor electronics!

Dimensional drawing A

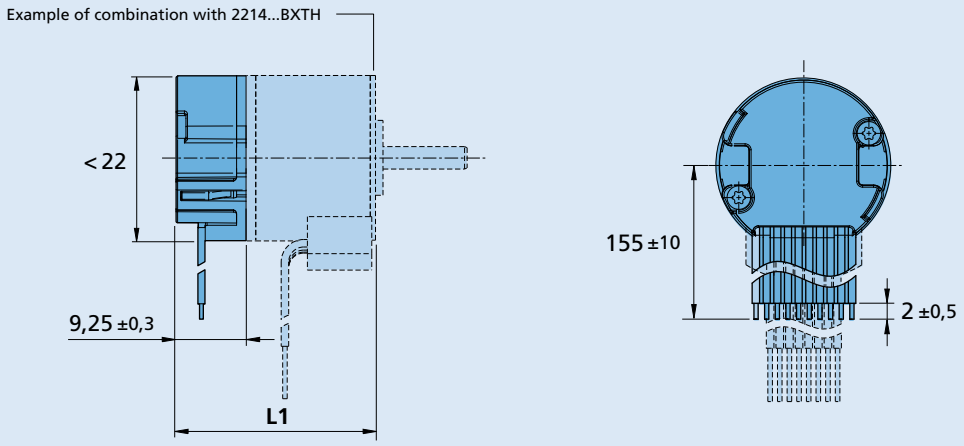

IERS3-500L

© DR. FRITZ FAULHABER GMBH & CO. KG
Specifications subject to change without notice.
www.faulhaber.com

Dimensional drawing B

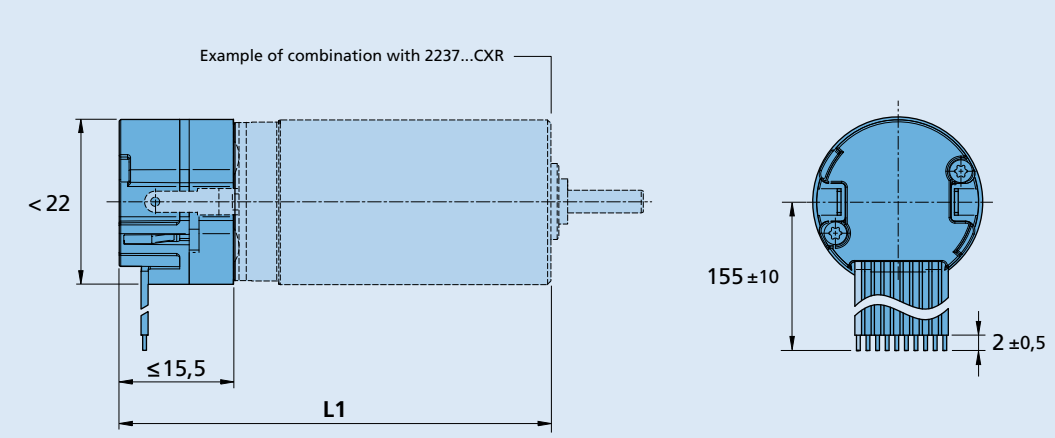

IERS3-500 L

Dimensional drawing C

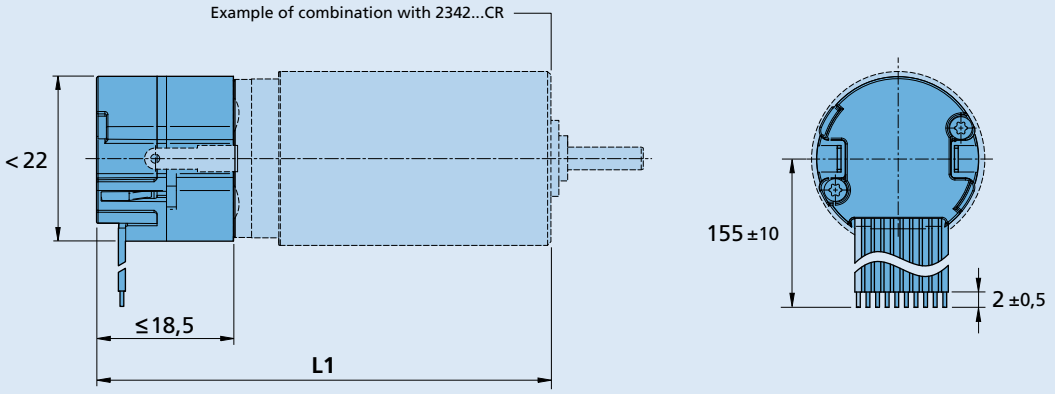

IERS3-500 L

Dimensional drawing D

Scale reduced

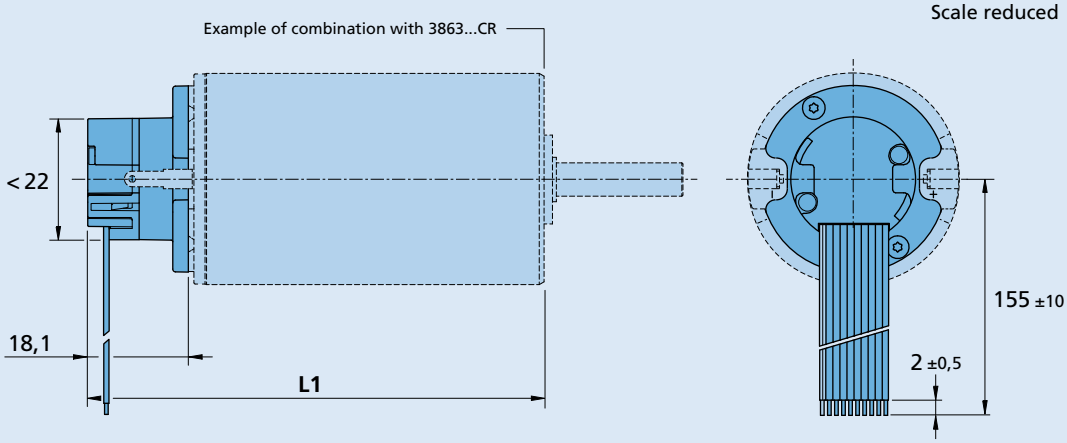

IERS3-500 L

© DR. FRITZ FAULHABER GMBH & CO. KG
Specifications subject to change without notice.
www.faulhaber.com

Encoders

optical Encoder, digital outputs,
3 channels, 1000 - 10000 lines per revolution

For combination with
DC-Micromotors
Brushless DC-Motors

Series IER3-10000

	IER3	-1000	-2000	-4000	-1024	-2048	-4096	-1700	-3400	-6800	-2500	-5000	-10000	
Lines per revolution	*N*	1000	2000	4000	1024	2048	4096	1700	3400	6800	2500	5000	10000	
Frequency range, up to [1]	*f*	250	500	1000	250	500	1000	250	500	1000	250	500	1000	kHz
Signal output, square wave		2+1 Index												Channels
Supply voltage	U_{DD}	4,5 … 5,5												V
Current consumption [2]	I_{DD}	typ. 27, max. 50												mA
Output current, max. [3]	I_{OUT}	4												mA
Index Pulse width	P_0	90 ± 15												°e
Phase shift, channel A to B	Φ	90 ± 20												°e
Signal rise/fall time (C_{LOAD} = 50 pF), typ.	*tr/tf*	< 0,1 / < 0,1												µs
Inertia of code disc, typ.	*J*	0,14												gcm^2
Operating temperature range [4]		– 20 ... + 85												°C
Accuracy, typ.		0,3			0,3			0,2			0,1			°m
Repeatability, typ.		0,05												°m
Hysteresis		< 0,05												°m
Edge spacing, min.		125												ns
Mass, typ.		13,5												g

[1] Velocity (min^{-1}) = *f* (Hz) x 60/*N*
[2] U_{DD} = 5 V: with unloaded outputs
[3] U_{DD} = 5 V: low logic level < 0,4 V, high logic level > 2,4 V: TTL compatible
[4] Operating temperature range - 40 ...+ 85 °C available on request

Product combination	IER3	-1000 -2000 -4000	-1024 -2048 -4096	-1700 -3400 -6800	-2500 -5000 -10000	
Series		**Motor, <L1** [mm]	**Motor, <L1** [mm]	**Motor, <L1** [mm]	**Motor, <L1** [mm]	**Drawing**
2214 ... BXT H		26,8	26,8	–	–	A
3216 ... BXT H		28,7	28,7	–	–	A
4221 ... BXT H		34,0	34,0	–	–	A
2264 ... BP4		79,1	79,1	–	–	B
3274 ... BP4		90,8	90,8	–	–	B
2237 ... CXR		52,5	52,5	–	–	B
2642 ... CXR		60,5	60,5	–	–	C
2657 ... CXR		75,5	75,5	–	–	C
2342 ... CR		60,5	60,5	–	–	C
2642 ... CR		60,5	60,5	–	–	C
2657 ... CR		75,5	75,5	–	–	C
2668 ... CR		86,5	86,5	–	–	C
3242 ... CR		60,5	60,5	–	–	C
3257 ... CR		75,5	75,5	–	–	C
3272 ... CR		90,5	90,5	–	–	C
3863 ... CR - 2016		82,6	82,6	–	–	D
3890 ... CR - 2016		108,6	108,6	–	–	D
2232 ... BX4		50,2	50,2	50,2	–	E
2250 ... BX4		68,2	68,2	68,2	–	E
3242 ... BX4		60,0	60,0	60,0	60,0	F
3268 ... BX4		86,0	86,0	86,0	86,0	F

Note: Please note that the available pulse numbers depend on the attachment system and therefore not all motors are available with all pulse numbers. The available pulse numbers for each motor are listed under the Combinatorics section.

Characteristics

These incremental encoders with 3 output channels, in combination with the FAULHABER Motors, are used for the indication and control of both shaft velocity and direction of rotation as well as for positioning.

With a reflective code disc two square wave signals with 90° phase shift and one index impulse per motor revolution are generated.

The optical measurement principle allows high accuracy and repeatability for positioning applications. The high resolution encoder provides up to 4096 lines per revolution. In combination with the brushless DC-Servomotors BX4 with diameter 22 mm up to 6800 lines per revolution are available.

In combination with the brushless DC-Servomotors BX4 with diameter 32 mm up to 10000 lines per revolution are available.

The encoder is connected via a ribbon cable. The pins are compatible to the FAULHABER Encoder IE3.

To view our large range of accessory parts, please refer to the "Accessories" chapter.

© DR. FRITZ FAULHABER GMBH & CO. KG
Specifications subject to change without notice.
www.faulhaber.com

Circuit diagram / Output signals

Output circuit

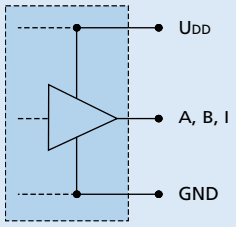

Output signals
with clockwise rotation as seen from the shaft end

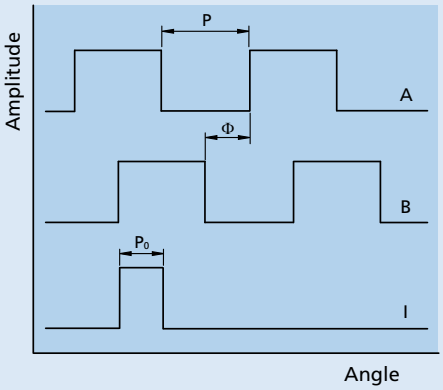

Connector information / Variants

Example product designation: **2232S024BX4 IER3-6800 3592**

Option	Type	Description
3807	Connector 6 1	for combination with DC-Motors series CR, CXR and with Brushless DC-Motor series BP4 and BXT H. Connector variants AWG 28 / PVC ribbon cable with connector MOLEX Picoblade 51021-0600, recommended mating connector 53047-0610.
3592	Connector 6 1	for combination with Brushless DC-Motors series BX4. Connector variants AWG 28 / PVC ribbon cable with connector MOLEX Picoblade 51021-0600, recommended mating connector 53047-0610. Inclusive motor connector 3830

Connection Encoder

No.	Function
1	N.C.
2	Channel I
3	GND
4	UDD
5	Channel B
6	Channel A

Standard cable
PVC-ribbon cable, 6-AWG 28, 1,27 mm

Caution:
Incorrect lead connection will damage the motor electronics!

Dimensional drawing A

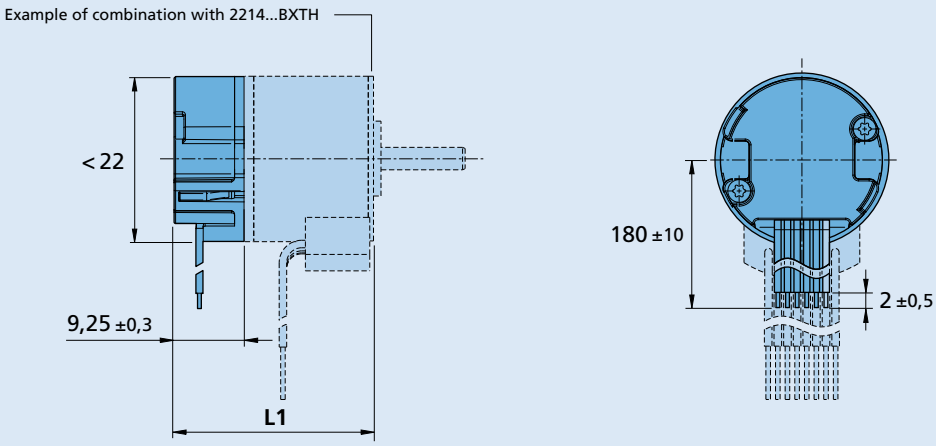

IER3-1000...4096

© DR. FRITZ FAULHABER GMBH & CO. KG
Specifications subject to change without notice.
www.faulhaber.com

Dimensional drawing B

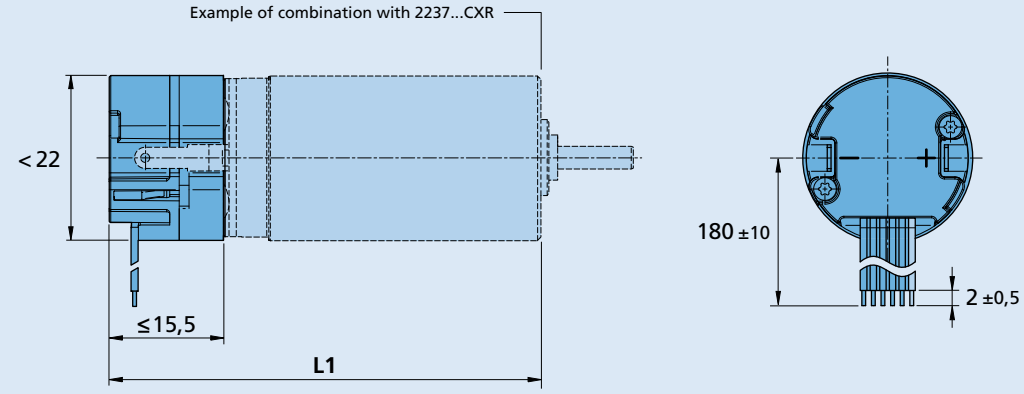

IER3-1000...4096

Dimensional drawing C

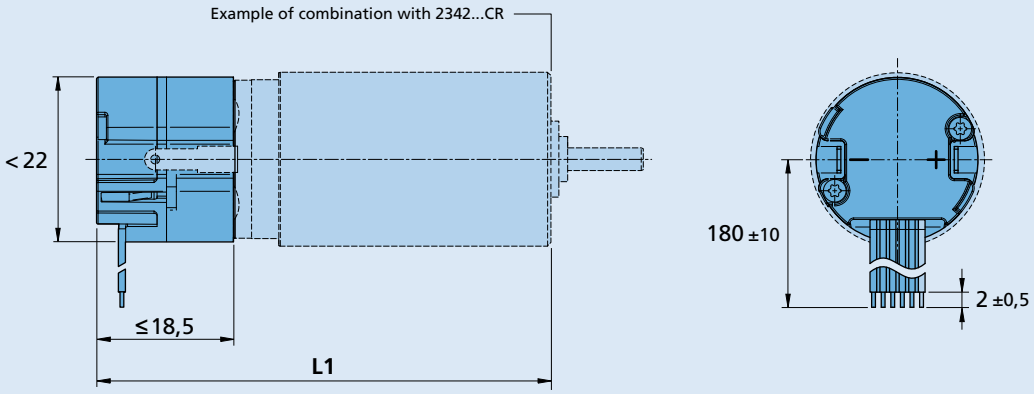

IER3-1000...4096

Dimensional drawing D

Scale reduced

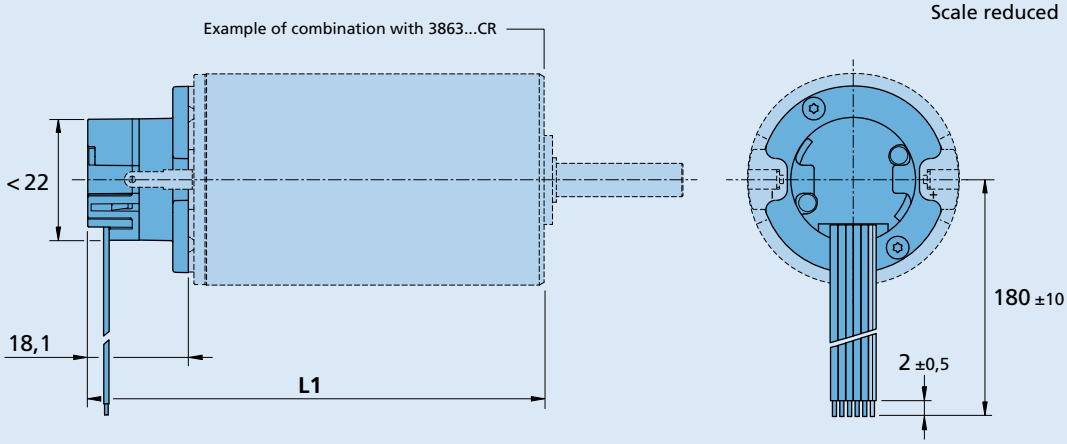

IER3-1000...4096

© DR. FRITZ FAULHABER GMBH & CO. KG
Specifications subject to change without notice.
www.faulhaber.com

Dimensional drawing E

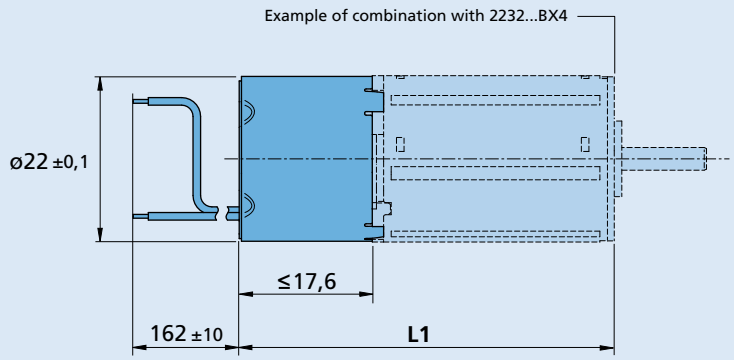

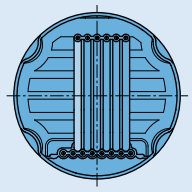

IER3-1000...6800

Dimensional drawing F

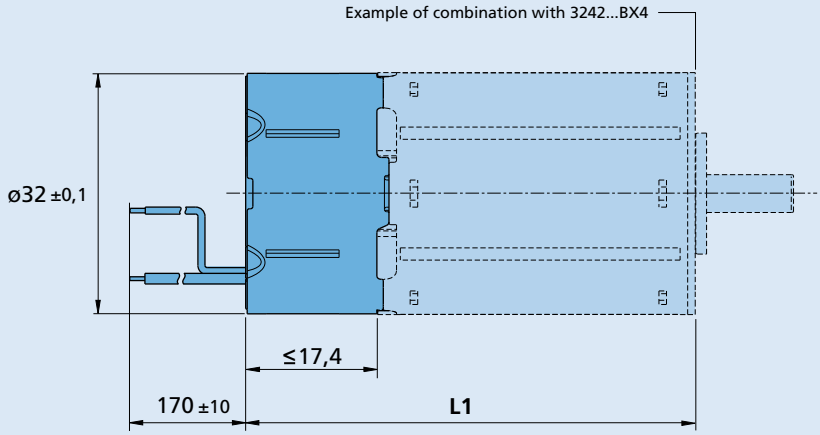

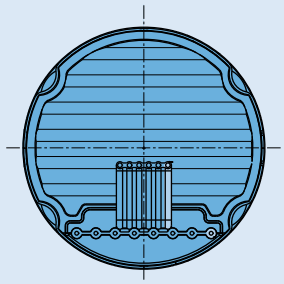

IER3-1000...10000

© DR. FRITZ FAULHABER GMBH & CO. KG
Specifications subject to change without notice.
www.faulhaber.com

Encoders

optical Encoder, digital outputs, 3 channels,
1000 - 10000 lines per revolution, Line Driver

For combination with
DC-Micromotors
Brushless DC-Motors

Series IER3-10000 L

	IER3	-1000	-2000	-4000	-1024	-2048	-4096	-1700	-3400	-6800	-2500	-5000	-10000	L
Lines per revolution	*N*	1000	2000	4000	1024	2048	4096	1700	3400	6800	2500	5000	10000	
Frequency range, up to [1]	*f*	250	500	1000	250	500	1000	250	500	1000	250	500	1000	kHz
Signal output, square wave		2+1 Index and complementary outputs												Channels
Supply voltage	U_{DD}	4,5 … 5,5												V
Current consumption [2]	I_{DD}	typ. 27, max. 50												mA
Index Pulse width	P_0	90 ± 15												°e
Phase shift, channel A to B	Φ	90 ± 20												°e
Inertia of code disc, typ.	*J*	0,14												gcm^2
Operating temperature range [3]		– 20 ... + 85												°C
Accuracy, typ.		0,3			0,3			0,2			0,1			°m
Repeatability, typ.		0,05												°m
Hysteresis		< 0,05												°m
Edge spacing, min.		125												ns
Mass, typ.		13,5												g

[1] Velocity (min^{-1}) = *f* (Hz) x 60/*N*
[2] U_{DD} = 5 V: with unloaded outputs
[3] Operating temperature range - 40 ...+ 85 °C available on request

Note: The output signals are TIA-422 compatible. Examples of Line Driver Receivers: ST26C32AB (STM), AM26C32 (TI).

Product combination	IER3	-1000 -2000 -4000	-1024 -2048 -4096	-1700 -3400 -6800	-2500 -5000 -10000	L
Series		**Motor, <L1** [mm]	**Motor, <L1** [mm]	**Motor, <L1** [mm]	**Motor, <L1** [mm]	**Drawing**
2214 ... BXT H		26,8	26,8	–	–	A
3216 ... BXT H		28,7	28,7	–	–	A
4221 ... BXT H		34,0	34,0	–	–	A
2264 ... BP4		79,1	79,1	–	–	B
3274 ... BP4		90,8	90,8	–	–	B
2237 ... CXR		52,5	52,5	–	–	B
2642 ... CXR		60,5	60,5	–	–	C
2657 ... CXR		75,5	75,5	–	–	C
2342 ... CR		60,5	60,5	–	–	C
2642 ... CR		60,5	60,5	–	–	C
2657 ... CR		75,5	75,5	–	–	C
2668 ... CR		86,5	86,5	–	–	C
3242 ... CR		60,5	60,5	–	–	C
3257 ... CR		75,5	75,5	–	–	C
3272 ... CR		90,5	90,5	–	–	C
3863 ... CR - 2016		82,6	82,6	–	–	D
3890 ... CR - 2016		108,6	108,6	–	–	D
2232 ... BX4		50,2	50,2	50,2	–	E
2250 ... BX4		68,2	68,2	68,2	–	E
3242 ... BX4		60,0	60,0	60,0	60,0	F
3268 ... BX4		86,0	86,0	86,0	86,0	F

Note: Please note that the available pulse numbers depend on the attachment system and therefore not all motors are available with all pulse numbers. The available pulse numbers for each motor are listed under the Combinatorics section.

Characteristics

These incremental encoders with 3 output channels, in combination with the FAULHABER Motors, are used for the indication and control of both shaft velocity and direction of rotation as well as for positioning.

With a reflective code disc two square wave signals with 90° phase shift and one index impulse per motor revolution are generated.

The optical measurement principle allows high accuracy and repeatability for positioning applications. The high resolution encoder provides up to 4096 lines per revolution. In combination with the brushless DC-Servomotors BX4 with diameter 22 mm up to 6800 lines per revolution are available.
In combination with the brushless DC-Servomotors BX4 with diameter 32 mm up to 10000 lines per revolution are available.

The Line Driver version has differential signal outputs (TIA-422). Differential signals reduce ambient interference and are suitable for applications with high ambient interference.

The Line Driver amplifies the encoder signal which means that long cables can be used without signal degradation.
Differential signal outputs must be decoded by the appropriate receiver module. In addition, a suitable line termination resistance (100 ohm) is possibly useful.

The encoder is connected via a ribbon cable. The pins are compatible to the FAULHABER Encoder IE3 L.

To view our large range of accessory parts, please refer to the "Accessories" chapter.

© DR. FRITZ FAULHABER GMBH & CO. KG
Specifications subject to change without notice.
www.faulhaber.com

Circuit diagram / Output signals

Output circuit

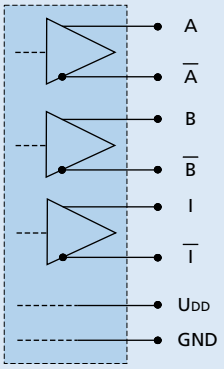

Output signals
with clockwise rotation as seen from the shaft end

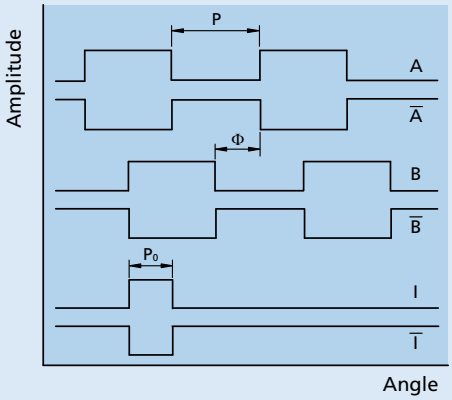

Connector information / Variants

Example product designation: **2232S024BX4 IER3-6800L 3589**

Option	Type	Description
3806	Connector 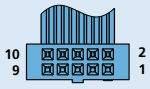	for combination with DC-Motors series CR, CXR and with Brushless DC-Motor series BP4 and BXT H. Connector variants AWG 28 / PVC ribbon cable with connector EN 60603-13 / DIN-41651.
3589	Connector 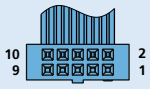	for combination with Brushless DC-Motors series BX4. Connector variants AWG 28 / PVC ribbon cable with connector EN 60603-13 / DIN-41651. Inclusive motor connector 3830

Connection Encoder

No.	Function
1	N.C.
2	UDD
3	GND
4	N.C.
5	Channel $\overline{A}$
6	Channel A
7	Channel $\overline{B}$
8	Channel B
9	Channel $\overline{I}$
10	Channel I

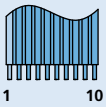

Standard cable
PVC-ribbon cable, 10-AWG 28, 1,27 mm

Caution:
Incorrect lead connection will damage the motor electronics!

Dimensional drawing A

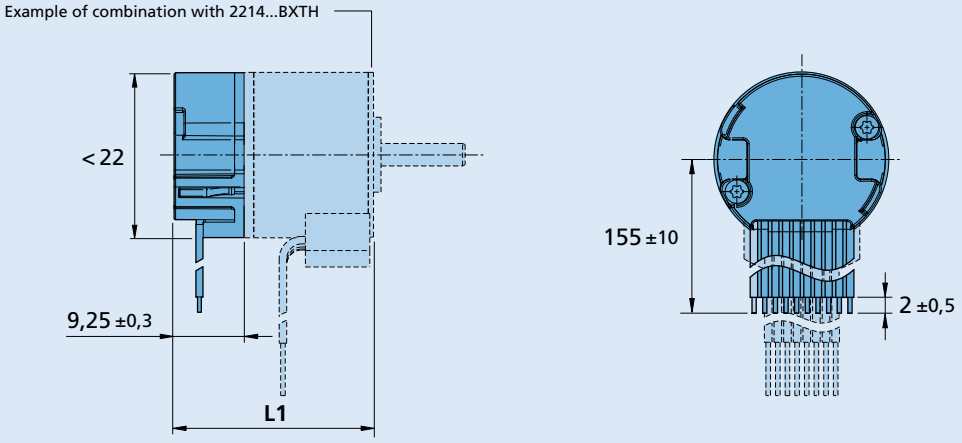

IER3-1000...4096 L

© DR. FRITZ FAULHABER GMBH & CO. KG
Specifications subject to change without notice.
www.faulhaber.com

Dimensional drawing B

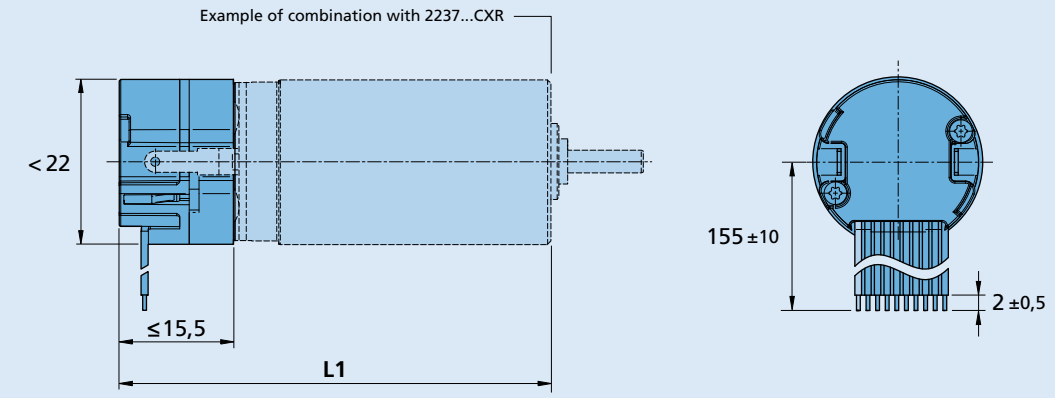

IER3-1000...4096 L

Dimensional drawing C

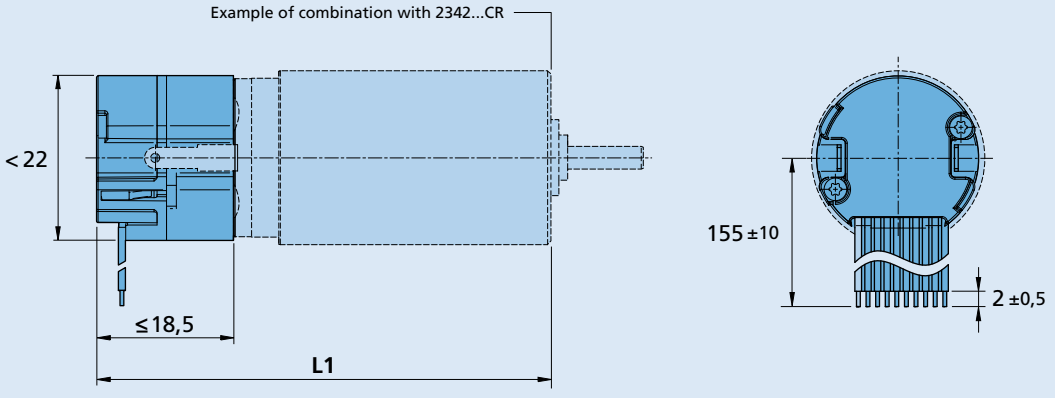

IER3-1000...4096 L

Dimensional drawing D

Scale reduced

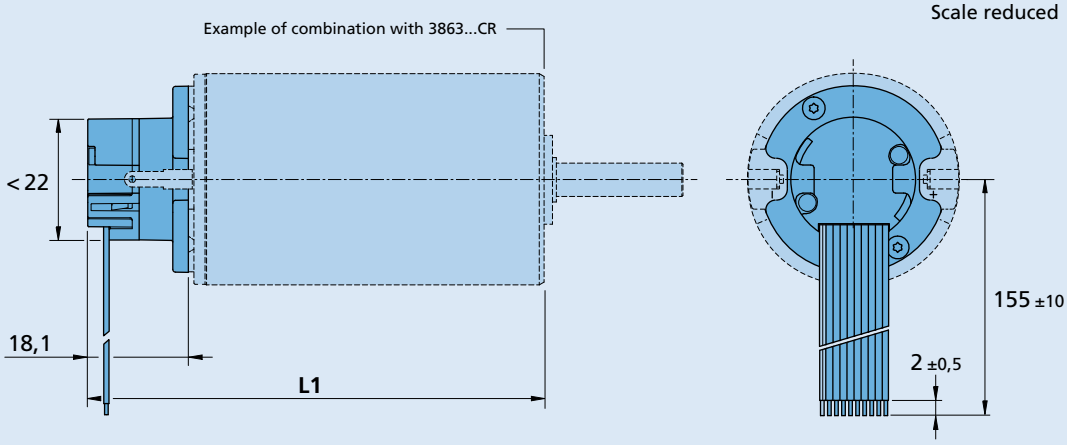

IER3-1000...4096 L

© DR. FRITZ FAULHABER GMBH & CO. KG
Specifications subject to change without notice.
www.faulhaber.com

Dimensional drawing E

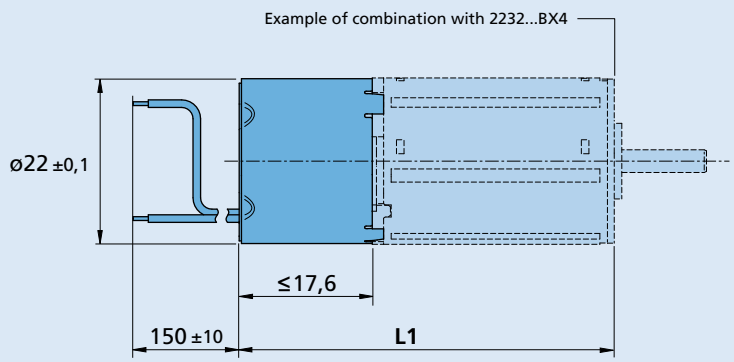

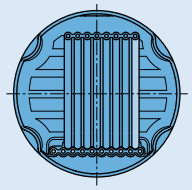

IER3-1000...6800 L

Dimensional drawing F

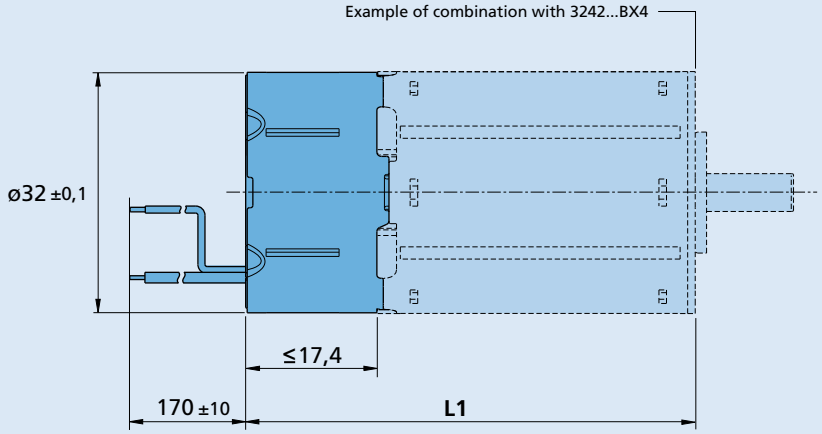

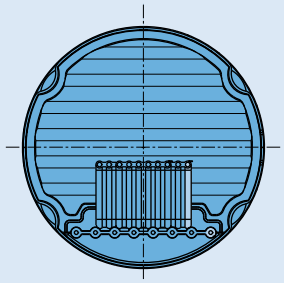

IER3-1000...10000 L

© DR. FRITZ FAULHABER GMBH & CO. KG
Specifications subject to change without notice.
www.faulhaber.com

Encoders

optical Encoder, digital outputs,
3 channels, 500 lines per revolution, Line Driver

For combination with
Brushless DC-Motors

Series HEDL 5540

		HEDL 5540 A	
Lines per revolution	*N*	500	
Frequency range, up to[1]	*f*	100	kHz
Signal output, square wave		2+1 Index and complementary outputs	Channels
Supply voltage	U_{DD}	4,5 ... 5,5	V
Current consumption, typical[2]	I_{DD}	57	mA
Pulse width	*P*	180 ± 35	°e
Index Pulse width	P_0	90 ± 35	°e
Phase shift, channel A to B	*Φ*	90 ± 15	°e
Logic state width	*S*	90 ± 35	°e
Cycle	*C*	360 ± 5,5	°e
Signal rise/fall time, max. (C_{LOAD} = pF)	*tr/tf*	0,25 / 0,25	µs
Inertia of code disc	*J*	0,6	gcm²
Operating temperature range		-40 ... +100	°C

[1] Velocity (min⁻¹) = *f* (Hz) x 60/*N*
[2] U_{DD} = 5 V: with unloaded outputs

For combination with Motor

Dimensional drawing A	<L1 [mm]
2036 ... B - K312	56,8
2057 ... B - K312	78,3
2444 ... B - K312	64,9
3056 ... B - K312	76,1
3564 ... B - K312	84,1
4490 ... B - K312	116,3
4490 ... BS - K312	116,3

Characteristics

These incremental shaft encoders in combination with the DC-Motors are designed for the indication and control of both shaft velocity and direction of rotation as well as for positioning.

A LED source and lens system transmits collimated light through a low inertia metal disc to give two channels with 90° phase shift. The index pulse is synchronized with the channel $\overline{B}$. Each encoder channel provides complementary output signals. The single 5 volt supply and the digital output signals are interfaced with a connector.

The Line Driver offers enhanced performance when the encoder is used in noisy environments, or when it is required to drive long distances.

Motor with ball bearings are recommended for continuous operation at low and high speeds and for elevated radial shaft load.

Details for the motors and suitable reduction gearheads are on separate catalogue pages.

To view our large range of accessory parts, please refer to the "Accessories" chapter.

© DR. FRITZ FAULHABER GMBH & CO. KG
Specifications subject to change without notice.
www.faulhaber.com

Circuit diagram / Output signals

Output circuit

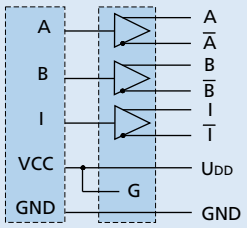

Recommendation:
Suggested Line Receivers:
AM26LS32, SN75175, MC3486

Output signals
with clockwise rotation as seen from the shaft end

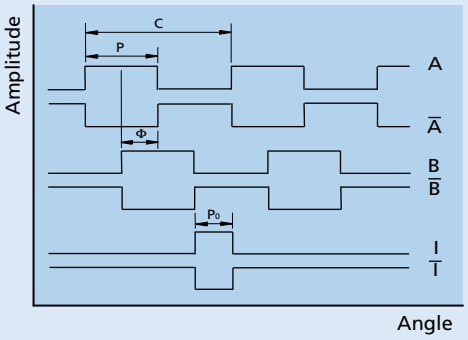

Connector information / Variants

Example product designation: **2444S024B-K312 HEDL5540A**

Option	Type	Description

Connection Encoder

No.	Function
1	N.C.
2	UDD (+5V)
3	GND
4	N.C.
5	Channel $\overline{A}$
6	Channel A
7	Channel $\overline{B}$
8	Channel B
9	Channel $\overline{I}$
10	Channel I

Cable
PVC-ribbon cable, 10-AWG 28, 0,09 mm²

Recommended connector
EN 60603-13 / DIN-41651, grid 2,54 mm

Dimensional drawing A

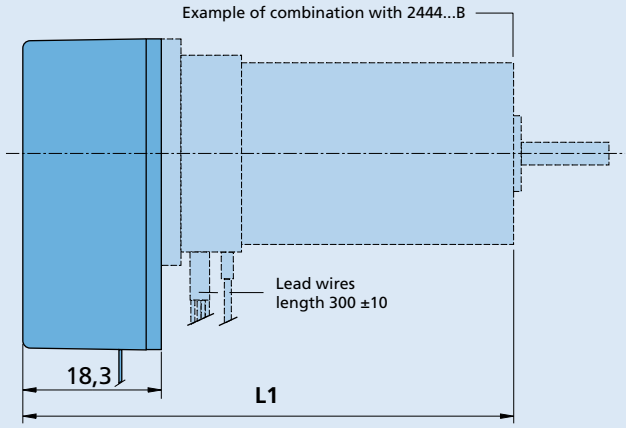

HEDL 5540

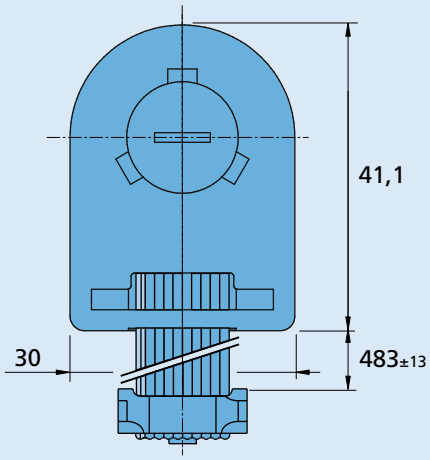

© DR. FRITZ FAULHABER GMBH & CO. KG
Specifications subject to change without notice.
www.faulhaber.com

Absolute encoders

Absolute encoders

AESM-4096	magnetic
AES-4096L	magnetic, Line Driver
AEMT-12/16L	magnetic multi-turn, SSI Interface, Line Driver

Backwards

Encoders

magnetic single-turn absolute Encoder,
SSI Interface with BISS-C Protocol,
4096 steps per revolution

For combination with
Brushless DC-Motors

Series AESM-4096

		AESM-4096	
Steps per revolution		4 096	
Single-turn resolution		12 Bit	
Signal output		SSI Interface with BISS-C Protocol	
Supply voltage	U_{DD}	4,5 ... 5,5	V
Current consumption, typical[1]	I_{DD}	typ. 16, max. 23	mA
Output current, max. (DATA)[2]		4	mA
Clock Frequency, max. (CLK)		2	MHz
Input low level (CLK)		0 ... 0,8	V
Input high level (CLK)		2 ... U_{DD}	V
Setup time after power on, max.	t_{setup}	4	ms
Timeout	$t_{timeout}$	16	µs
Inertia of sensor magnet	J	0,007	gcm²
Operating temperature range		-30 ... +100	°C

[1] U_{DD} = 5 V: with unloaded outputs
[2] U_{DD} = 5 V: low logic level < 0,4 V, high logic level > 4,6 V: CMOS- and TTL compatible

For combination with Motor

Dimensional drawing A	<L1 [mm]
0824 ... B	24,1

Dimensional drawing B	<L1 [mm]
1028 ... B	28,1

Characteristics

The absolute encoder in combination with the FAULHABER motors is ideal for commutation, speed and position control. It can also be used to create a sinusoidal commutation signal.

In the AESM version, absolute position information is provided with a resolution of up to 4096 steps per revolution at the signal outputs and communicated via a SSI Interface with BISS-C Protocol.

Absolute means, that each shaft position is assigned to an unique angular value within one revolution. This value is already available directly after power-on. The advantages are a reduced torque ripple, a higher efficiency, and reduced electrical noise generation.

Motor and encoder are connected via a common flexboard.

To view our large range of accessory parts, please refer to the "Accessories" chapter.

© DR. FRITZ FAULHABER GMBH & CO. KG
Specifications subject to change without notice.
www.faulhaber.com

Circuit diagram / Output signals

Output circuit

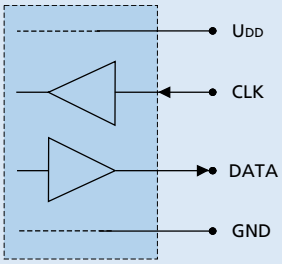

Interface Protocol BISS-C

Angle position values are ascending for clockwise rotation.
Clockwise rotation as seen from the shaft end.

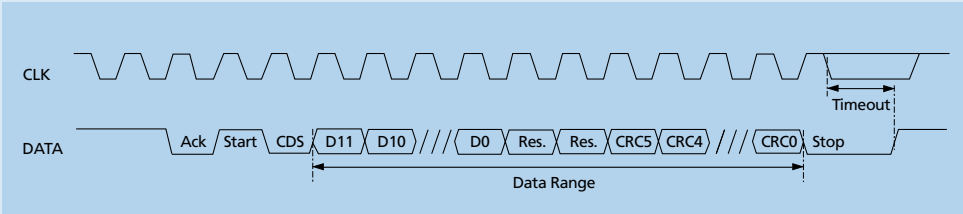

Connector information / Variants

Example product designation: **0824K006B AESM-4096**

Option	Type	Description

Connection Encoder and Motor

No.	Function
1	Phase C
2	Phase B
3	Phase A
4	GND
5	UDD
6	CLK
7	N.C.
8	DATA

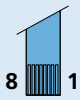

Flexboard
8 circuit, 0,5 mm pitch

Recommended connector
Top contact style, 8 circuits, 0,5 mm pitch,
e.g.: Molex 52745-0897

Caution: incorrect lead connection will damage the motor electronics!

Dimensional drawing A

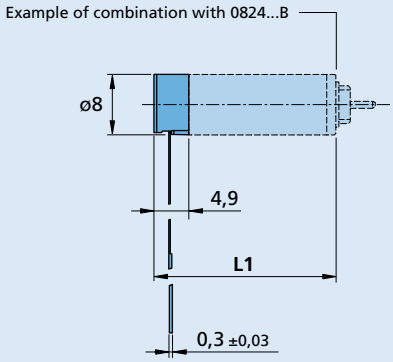

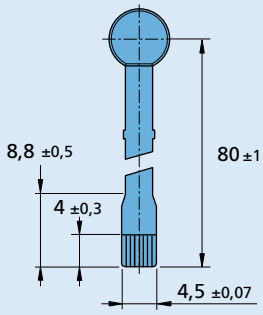

AESM-4096

© DR. FRITZ FAULHABER GMBH & CO. KG
Specifications subject to change without notice.
www.faulhaber.com

Dimensional drawing B

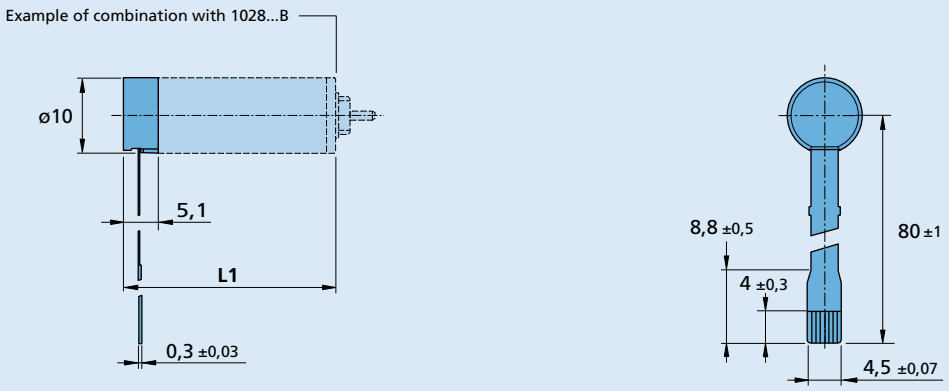

AESM-4096

© DR. FRITZ FAULHABER GMBH & CO. KG
Specifications subject to change without notice.
www.faulhaber.com

Encoders

magnetic single-turn absolute Encoder,
SSI Interface with BISS-C Protocol,
4096 steps per revolution, Line Driver

For combination with
Brushless DC-Motors

Series AES-4096 L

		AES-4096 L	
Steps per revolution		4 096	
Single-turn resolution		12 Bit	
Signal output		SSI Interface with BISS-C Protocol	
Supply voltage	U_{DD}	4,5 ... 5,5	V
Current consumption, typical[1]	I_{DD}	typ. 22, max. 32	mA
Clock Frequency, max. (CLK and $\overline{CLK}$)		2	MHz
Input low level (CLK and $\overline{CLK}$)		0 ... 0,8	V
Input high level (CLK and $\overline{CLK}$)		2 ... 5	V
Setup time after power on, max.	t_{setup}	4	ms
Timeout, typ.	$t_{timeout}$	20	µs
Inertia of sensor magnet	J	0,08	gcm²
Operating temperature range		-40 ... +100	°C
Hysteresis		0	°m
Mass, typ.		13,5	g

[1] U_{DD} = 5 V: with unloaded outputs

Note: The output signals are TIA-422 compatible.
Examples of Line Driver Receivers: iC-HF, SN65LBC179, SN75179B

For combination with Motor

Dimensional drawing A	**<L1 [mm]**
2444 ... B - K3051	55,3
3056 ... B - K3051	67,3
3564 ... B - K3051	75,3
4490 ... B - K3051	100,3
4490 ... BS - K3051	100,3
Dimensional drawing B	**<L1 [mm]**
2232 ... BX4	50,2
2250 ... BX4	68,2
Dimensional drawing C	**<L1 [mm]**
3242 ... BX4	60,0
3268 ... BX4	86,0
Dimensional drawing D	**<L1 [mm]**
2264 ... BP4 - 6356	79,1
3274 ... BP4 - 6356	90,8

Characteristics

The absolute encoder with Line Driver in combination with the FAULHABER brushless DC-Servomotors is ideal for commutation, speed and position control. It can also be used to create a sinusoidal commutation signal.

In the AES-4096 L, absolute position information is provided with a resolution of up to 4096 steps per revolution at the signal outputs and communicated via a SSI Interface with BISS-C Protocol. Absolute means, that each shaft position is assigned to an unique angular value within one revolution. This value is already available directly after power-on.

Additional advantages are a higher efficiency of the motor and a reduced torque ripple.

The AES-4096 L has differential signal outputs (TIA-422). Differential signals reduce ambient interference and are suitable for applications with high ambient interference.
The Line Driver amplifies the encoder signal which means that long cables can be used without signal degradation.

Differential signal outputs must be decoded by the appropriate receiver module. In the encoder a 120 ohm line termination resistor is integrated between the CLK and $\overline{CLK}$ inputs. A corresponding resistor is recommended for the DATA and $\overline{DATA}$ output signals on the controller. Special number 6419 is recommended for operation with FAULHABER Motion Controllers of generation V3.0. With this variant, the resistor for the DATA and $\overline{DATA}$ output signals is already integrated in the controller.

The supply voltage as well as the output signals for the encoder are interfaced through a ribbon cable, optionally with connector.

For the brushless DC servomotors series BX4, the motor and encoder are connected via two ribbon cables.
In the series B and BP4 the motors are connected via single wires and the encoders via ribbon cable.
Details for the brushless DC-servomotors and suitable reduction gearheads are on separate catalogue pages.

To view our large range of accessory parts, please refer to the "Accessories" chapter.

© DR. FRITZ FAULHABER GMBH & CO. KG
Specifications subject to change without notice.
www.faulhaber.com

Circuit diagram / Output signals

Output circuit

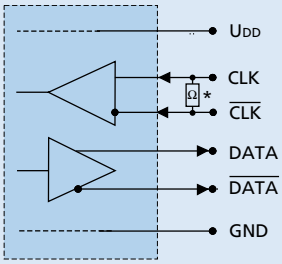

Interface Protocol BISS-C

Angle position values are ascending for clockwise rotation.
Clockwise rotation as seen from the shaft end.

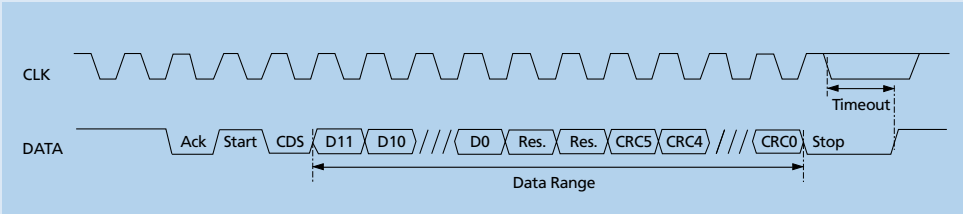

*Terminating resistor 120 Ω

Note: $\overline{\text{Data}}$ and $\overline{\text{Clock}}$ run inverted to the displayed signals Data and Clock.

Connector information / Variants

Example product designation: **3242G024BX4 AES-4096 L**

Option	Type	Description
5418	Connector 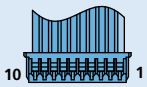	for combination with Brushless DC-Motor series B(S) and BP4. Connector variants AWG 28 / PVC ribbon cable with connector Molex Picoblade, 51021-1000, recommended mating connector Picoblade 53047-1010.
5419	Connector 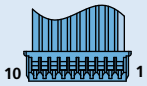	for combination with Brushless DC-Motors series BX4. Connector variants AWG 28 / PVC ribbon cable with connector Molex Picoblade, 51021-1000, recommended mating connector Picoblade 53047-1010. Inclusive motor connector 3830

Connection Encoder

No.	Function
1	N.C.
2	UDD
3	GND
4	N.C.
5	Reserved
6	Reserved
7	$\overline{\text{DATA}}$
8	DATA
9	$\overline{\text{CLK}}$
10	CLK

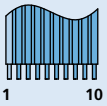

Standard cable
PVC-ribbon cable, 10-AWG 28, 1,27 mm.

Note:
Motors with AES-4096 L are commutated via the encoder and, by default, do not have any Hall sensors.

Caution:
incorrect lead connection will damage the motor electronics!

Dimensional drawing A

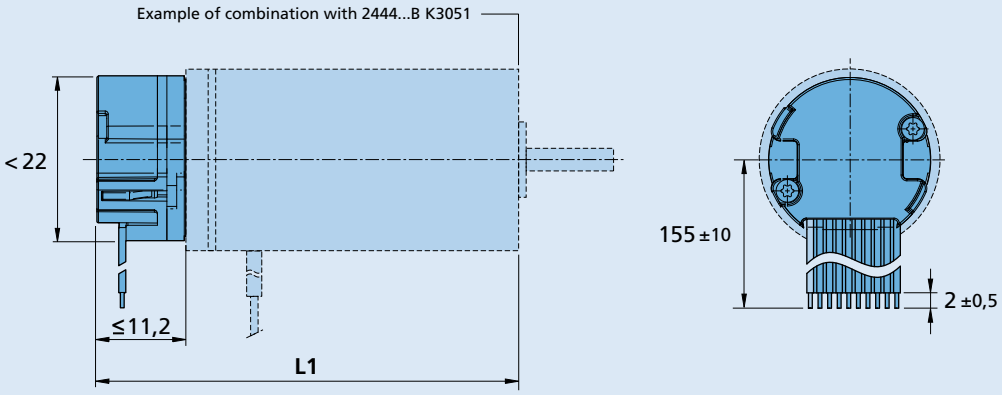

AES-4096 L

© DR. FRITZ FAULHABER GMBH & CO. KG
Specifications subject to change without notice.
www.faulhaber.com

Dimensional drawing B

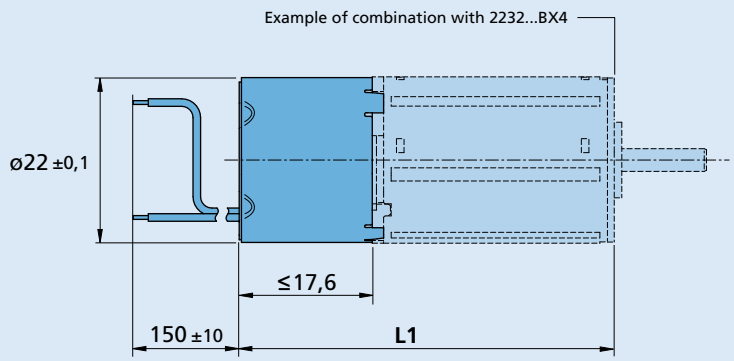

AES-4096 L

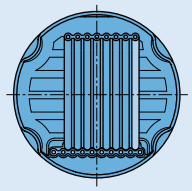

Dimensional drawing C

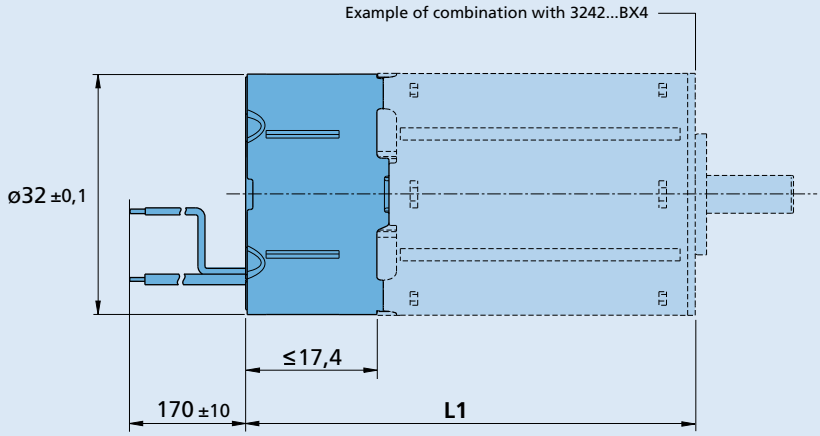

AES-4096 L

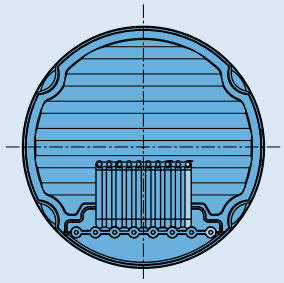

Dimensional drawing D

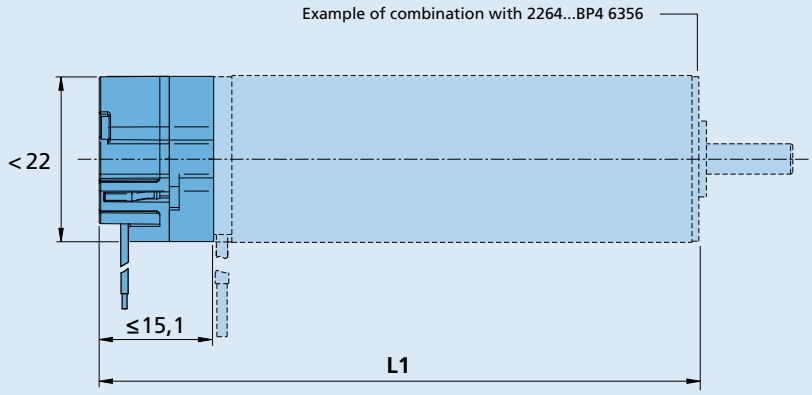

AES-4096 L

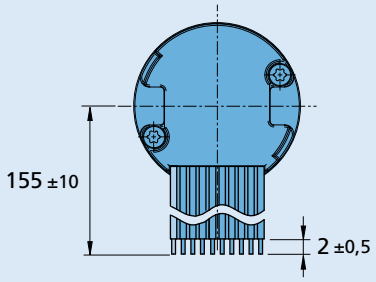

© DR. FRITZ FAULHABER GMBH & CO. KG
Specifications subject to change without notice.
www.faulhaber.com

Encoders

magnetic multi-turn absolute Encoder,
SSI Interface with BISS-C Protocol,
4096 steps per revolution, Line Driver

For combination with
Brushless DC-Motors

Series AEMT-12/16 L

		AEMT-12/16 L	
Steps per revolution		4 096	
Single-turn resolution		12 Bit	
Multi-turn resolution		16 Bit	
Signal output		SSI Interface with BISS-C Protocol	
Supply voltage	U_{DD}	4,5 ... 5,5	V
Current consumption, typical[1]	I_{DD}	typ. 25, max. 35	mA
Battery voltage[2]		3 ... 5,5	V
Clock Frequency, max. (CLK and $\overline{CLK}$)		2	MHz
Input low level (CLK and $\overline{CLK}$)		0 ... 0,8	V
Input high level (CLK and $\overline{CLK}$)		2 ... 5	V
Setup time after power on, max.	t_{setup}	20	ms
Timeout, typ.	$t_{timeout}$	20	µs
Inertia of sensor magnet	J	0,08	gcm²
Operating temperature range		-40 ... +100	°C
Hysteresis		0,17	°m
Mass, typ.		13,5	g

[1] U_{DD} = 5 V: with unloaded outputs
[2] Battery adapter available as accessory (article no. 6501.00368)

Note: The output signals are TIA-422 compatible.
Examples of Line Driver Receivers: iC-HF, SN65LBC179, SN75179B

For combination with Motor

Dimensional drawing A	**<L1 [mm]**
2444 ... B - K3051	55,3
3056 ... B - K3051	67,3
3564 ... B - K3051	75,3
4490 ... B - K3051	100,3
4490 ... BS - K3051	100,3
Dimensional drawing B	**<L1 [mm]**
2232 ... BX4	50,2
2250 ... BX4	68,2
Dimensional drawing C	**<L1 [mm]**
3242 ... BX4	60,0
3268 ... BX4	86,0
Dimensional drawing D	**<L1 [mm]**
2264 ... BP4 - 6356	79,1
3274 ... BP4 - 6356	90,8

Characteristics

The multi-turn absolute encoder with Line Driver in combination with the FAULHABER brushless DC-Servomotors is ideal for commutation, speed and position control. It can also be used to create a sinusoidal commutation signal.

The encoder provides absolute angle information with a Single-turn resolution of 12 bits and a multi-turn resolution of 16 bits.
The position data can be communicated via an SSI interface with BiSS-C Protocol.
Besides the standard configuration as detailed here different alternative resolutions are available on request as a special programming.

Additional advantages are a higher efficiency of the motor and a reduced torque ripple.
The encoder has differential input and output signals (TIA-422).
Differential signals reduce ambient interference and are suitable for applications with high ambient interference.
The Line Driver amplifies the encoder signal which means that long cables can be used without signal degradation.

Differential signal outputs must be decoded by the appropriate receiver module. In the encoder a 120 ohm line termination resistor is integrated between the CLK and $\overline{CLK}$ inputs. A corresponding resistor is recommended for the DATA and $\overline{DATA}$ output signals on the controller. Special number 6419 is recommended for operation with FAULHABER Motion Controllers of generation V3.0. With this variant, the resistor for the DATA and $\overline{DATA}$ output signals is already integrated in the controller.

The supply voltage as well as the output signals for the encoder are interfaced through a ribbon cable, optionally with connector. Through the pin U_{BAT} the supply with an optional backup battery is possible (Article number 6501.00368).

For the brushless DC servomotors series BX4, the motor and encoder are connected via two ribbon cables.
In the series B and BP4 the motors are connected via single wires and the encoders via ribbon cable.

To view our large range of accessory parts, please refer to the "Accessories" chapter.

© DR. FRITZ FAULHABER GMBH & CO. KG
Specifications subject to change without notice.
www.faulhaber.com

Circuit diagram / Output signals

Output circuit

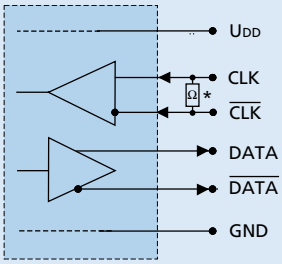

Interface Protocol BISS-C

Angle position values are ascending for clockwise rotation.
Clockwise rotation as seen from the shaft end.

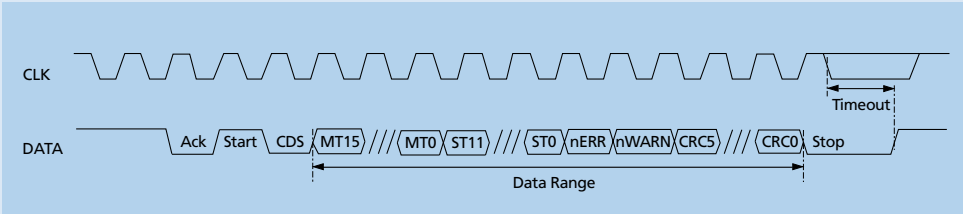

*Terminating resistor 120 Ω

Note: $\overline{\text{Data}}$ and $\overline{\text{Clock}}$ run inverted to the displayed signals Data and Clock.

Connector information / Variants

Example product designation: **3242G024BX4 AEMT-12/16 L**

Option	Type	Description
5418	Connector 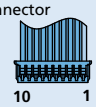 10 1	for combination with Brushless DC-Motor series B(S) BP4, and BXT H. Connector variants AWG 28 / PVC ribbon cable with connector Molex Picoblade, 51021-1000, recommended mating connector Picoblade 53047-1010.
5419	Connector 10 1	for combination with Brushless DC-Motors series BX4. Connector variants AWG 28 / PVC ribbon cable with connector Molex Picoblade, 51021-1000, recommended mating connector Picoblade 53047-1010. Inclusive motor connector 3830

Connection standard

No.	Function
1	Preset
2	UDD
3	GND
4	UBAT
5	Reserved
6	Reserved
7	$\overline{\text{DATA}}$
8	DATA
9	$\overline{\text{CLK}}$
10	CLK

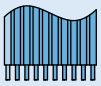

Standard cable
PVC-ribbon cable, 10-AWG 28, 1,27 mm.

Note:
Motors with AEMT-12/16 L are commutated via the encoder and, by default, do not have any Hall sensors.

Caution:
incorrect lead connection will damage the motor electronics!

Dimensional drawing A

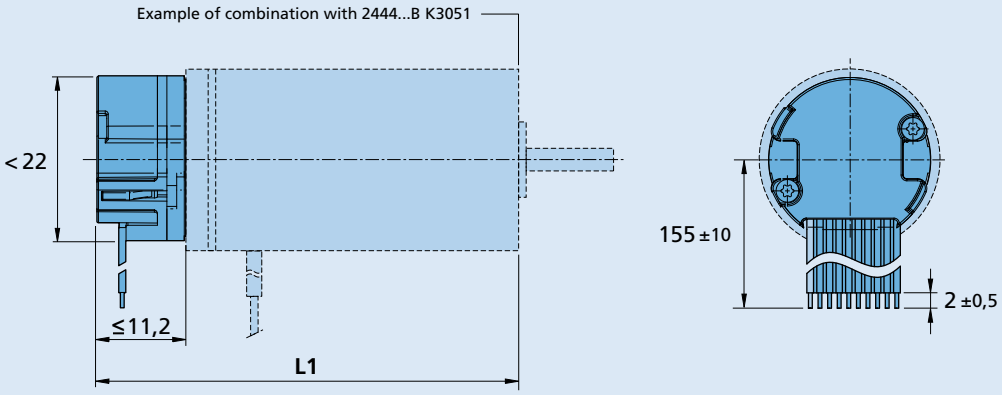

AEMT-12/16 L

© DR. FRITZ FAULHABER GMBH & CO. KG
Specifications subject to change without notice.
www.faulhaber.com

Dimensional drawing B

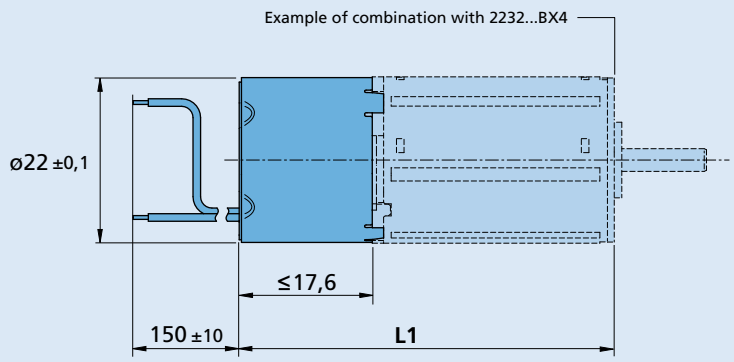

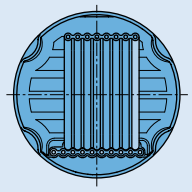

AEMT-12/16 L

Dimensional drawing C

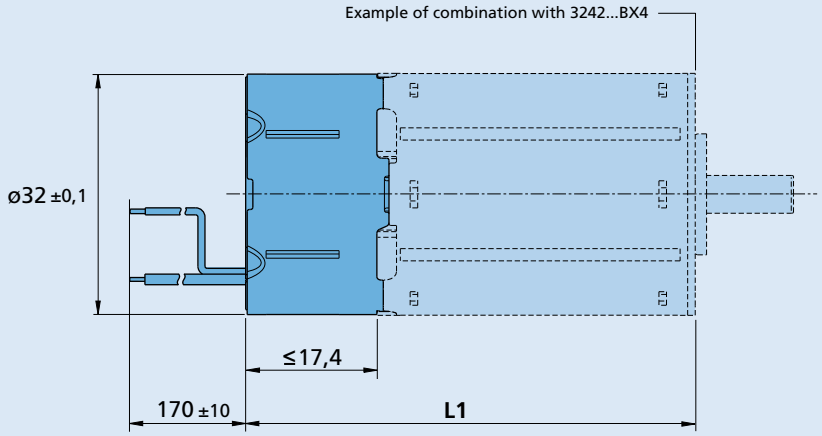

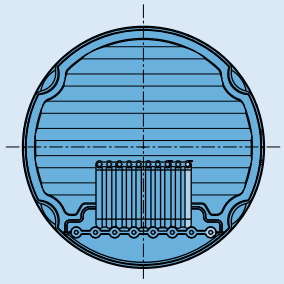

AEMT-12/16 L

Dimensional drawing D

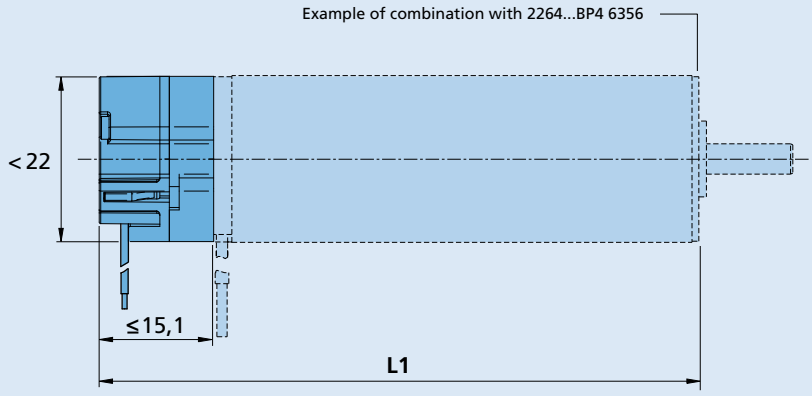

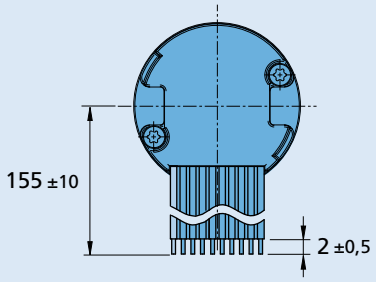

AEMT-12/16 L

© DR. FRITZ FAULHABER GMBH & CO. KG
Specifications subject to change without notice.
www.faulhaber.com

Drive electronics

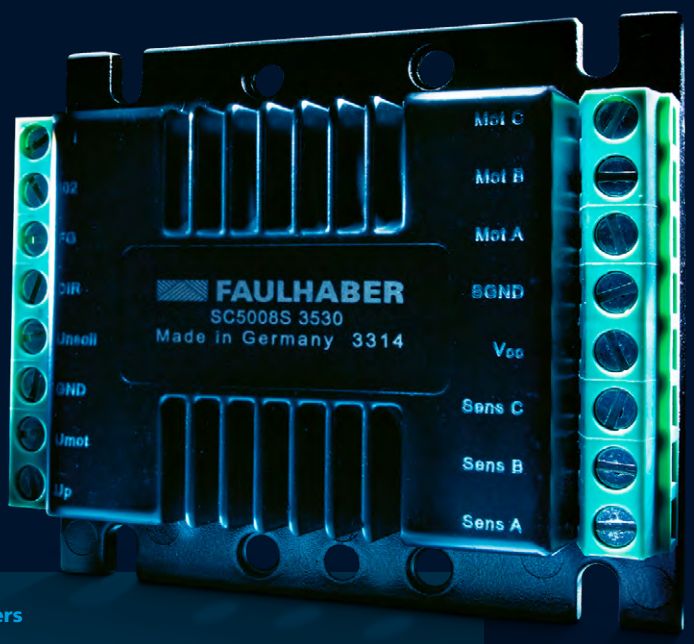

Speed Controllers

SC 1801 P	for DC and Brushless Motors	1 A
SC 1801 F	for DC and Brushless Motors	1 A
SC 1801 S	for DC and Brushless Motors	1 A
SC 2402 P	for DC and Brushless Motors	2 A
SC 2804 S	for DC and Brushless Motors	4 A
SC 5004 P	for DC and Brushless Motors	4 A
SC 5008 S	for DC and Brushless Motors	8 A

Backwards

Speed Controllers

2-Quadrant PWM configurable via PC

SC 1801 P

Values at 22°C		SC 1801 P	
Power supply electronic	U_P	4 ... 18	V DC
Power supply motor	U_{mot}	1,8 ... 18	V DC
PWM switching frequency [1]	f_{PWM}	96	kHz
Efficiency electronic	η	95	%
Max. continuous output current	I_{cont}	1	A
Max. peak output current [2]	I_{max}	2	A
Standby current for electronic (at U_P=12V)	I_{el}	0,018	A
Operating temperature range		-25 ... +60	°C
Mass		4	g

[1] for brushless DC-Motors without Hall sensors: f_{PWM} = 24 kHz
[2] S2 mode for max. 2s

Interfaces

Configuration of setpoint specifications, operating mode and controller parameters via USB programming adapter for Speed Controller.
Note: The programming adapter cannot be directly connected in this version of the Speed Controller.

Basic features

Speed-controlled operation of:

- DC-Micromotors operated with or without incremental encoders
- Brushless DC-Servomotors operated with digital or analog Hall sensors
- Brushless DC-Servomotors operated without Hall sensors (sensorless Operation)
- Brushless DC-Servomotors operated with digital Hall sensors and incremental encoders
- Brushless DC-Servomotors operated with absolute encoders

Note: For version, see options and connection information.

Range of functions

Description	Intermittent operation with up to double the continuous current. Separate voltage supply for motor and electronics. Integrated speed control by means of PI controller. Sensorless operation by evaluating the back electromotive force (EMF). Setpoint input of the speed via PWM or analog voltage value. Switching input for defining the direction of rotation of the motor. Digital output, can be programmed either as frequency output or as error output
Additional functions	Integrated current limitation to protect against thermal overload. Can optionally be operated in voltage controller mode or fixed speed mode.

© DR. FRITZ FAULHABER GMBH & CO. KG
Specifications subject to change without notice.
www.faulhaber.com

Dimensional drawing

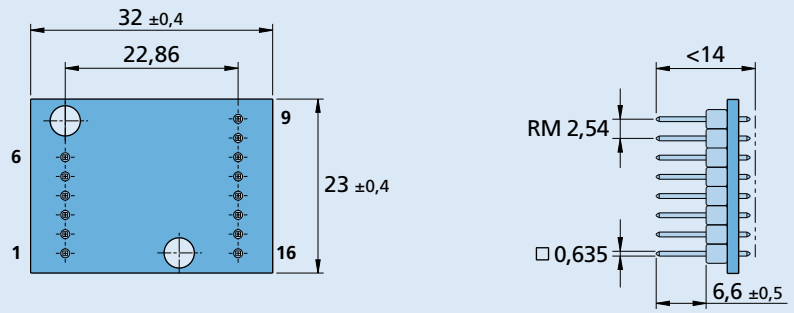

SC 1801 P

Options and connection information

Example product designation: **SC 1801 P 3533**

Option	Type	Description
3533	BL	Sensorless (high speed)
4763	BL	Absolute encoder 2 pole motors
4289	BL	Analog Hall sensors 2 pole motors
3980	BL	Absolute encoder 4 pole motors
4764	BL	Analog Hall sensors 4 pole motors
3530	BL	Digital Hall sensors 2 pole motors
3531	DC	Incremental encoder
6339	BL	Digital Hall sensors 4 pole motors
6340	BL	Digital Hall sensors 14 pole motors

Connection

No.	Function	No.	Function
1	U_P	9	Mot C
2	U_{mot}	10	Mot B
3	GND	11	Mot A
4	U_{nsoll}	12	SGND
5	DIR	13	V_{CC}
6	FG	14	Sens C
7	-	15	Sens B
8	-	16	Sens A

Note: For details on the connection assignment, see device manual SC.

Product combination

DC-Motors

0615 ... S
0816 ... SR
1016 ... SR
1024 ... SR
1219 ... G
1224 ... SR
1319 ... SR
1331 ... SR
1336 ... CXR
1516 ... S
1516 ... SR
1524 ... SR
1624 ... S
1717 ... SR
1724 ... SR
1727 ... CXR
1741 ... CXR
2224 ... SR
2230 ... S
2232 ... SR
2233 ... S
2237 ... CXR
1506 ... SR
1512 ... SR
2607 ... SR
2619 ... SR

Brushless DC-Motors

0824 ... B
1028 ... B
1218 ... B
1226 ... B
1628 ... B
2036 ... B
2214 ... BXT R
2214 ... BXT H
2232 ... BX4
1509 ... B
1515 ... B
2610 ... B
2622 ... B

Cables / Accessories

To view our large range of accessory parts, please refer to the „Accessories“ chapter.

© DR. FRITZ FAULHABER GMBH & CO. KG
Specifications subject to change without notice.

Speed Controllers

2-Quadrant PWM configurable via PC

SC 1801 F

Values at 22°C		SC 1801 F	
Power supply electronic	U_P	4 ... 18	V DC
Power supply motor	U_{mot}	1,8 ... 18	V DC
PWM switching frequency [1]	f_{PWM}	96	kHz
Efficiency electronic	η	95	%
Max. continuous output current	I_{cont}	1	A
Max. peak output current [2]	I_{max}	2	A
Standby current for electronic (at U_P=12V)	I_{el}	0,018	A
Operating temperature range		-25 ... +60	°C
Housing material		Hotmelt	
Mass		10	g

[1] for brushless DC-Motors without Hall sensors: f_{PWM} = 24 kHz
[2] S2 mode for max. 2s

Interfaces

Configuration of setpoint specifications, operating mode and controller parameters via USB programming adapter for Speed Controller.

Basic features

Speed-controlled operation of:

- DC-Micromotors operated with or without incremental encoders
- Brushless DC-Servomotors operated with digital or analog Hall sensors
- Brushless DC-Servomotors operated without Hall sensors (sensorless Operation)
- Brushless DC-Servomotors operated with digital Hall sensors and incremental encoders
- Brushless DC-Servomotors operated with absolute encoders

Note: For version, see options and connection information.

Range of functions

Description	Intermittent operation with up to double the continuous current. Separate voltage supply for motor and electronics. Integrated speed control by means of PI controller. Sensorless operation by evaluating the back electromotive force (EMF). Setpoint input of the speed via PWM or analog voltage value. Switching input for defining the direction of rotation of the motor. Digital output, can be programmed either as frequency output or as error output
Additional functions	Integrated current limitation to protect against thermal overload. Can optionally be operated in voltage controller mode or fixed speed mode.

© DR. FRITZ FAULHABER GMBH & CO. KG
Specifications subject to change without notice.
www.faulhaber.com

Dimensional drawing

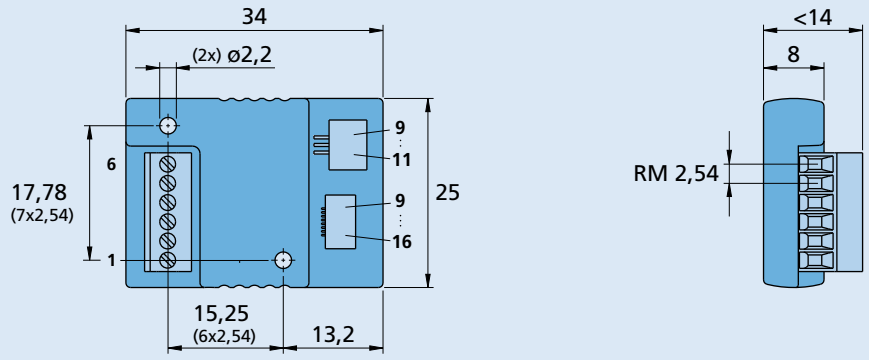

SC 1801 F

Connector Information
LIF-Connector
3-pole and 8-pole

Options and connection information

Example product designation: **SC 1801 F 3533**

Option	Type	Description
3533	BL	Sensorless (high speed)
4763	BL	Absolute encoder 2 pole motors
4289	BL	Analog Hall sensors 2 pole motors
3980	BL	Absolute encoder 4 pole motors
4764	BL	Analog Hall sensors 4 pole motors
3530	BL	Digital Hall sensors 2 pole motors

Connection

No.	Function	No.	Function
1	U_P	9	Mot C
2	U_{mot}	10	Mot B
3	GND	11	Mot A
4	U_{nsoll}	12	SGND
5	DIR	13	V_{CC}
6	FG	14	Sens C
7	-	15	Sens B
8	-	16	Sens A

Note: For details on the connection assignment, see device manual SC.

Product combination

Brushless DC-Motors

0308 ... B
0515 ... B
0620 ... B

Cables / Accessories

To view our large range of accessory parts, please refer to the „Accessories“ chapter.

© DR. FRITZ FAULHABER GMBH & CO. KG
Specifications subject to change without notice.

Speed Controllers

2-Quadrant PWM configurable via PC

SC 1801 S

Values at 22°C		SC 1801 S	
Power supply electronic	U_P	4 ... 18	V DC
Power supply motor	U_{mot}	1,8 ... 18	V DC
PWM switching frequency [1]	f_{PWM}	96	kHz
Efficiency electronic	η	95	%
Max. continuous output current	I_{cont}	1	A
Max. peak output current [2]	I_{max}	2	A
Standby current for electronic (at U_P=12V)	I_{el}	0,018	A
Operating temperature range		-25 ... +60	°C
Housing material		Hotmelt	
Mass		12	g

[1] for brushless DC-Motors without Hall sensors: f_{PWM} = 24 kHz
[2] S2 mode for max. 2s

Interfaces

Configuration of setpoint specifications, operating mode and controller parameters via USB programming adapter for Speed Controller.

Basic features

Speed-controlled operation of:

- DC-Micromotors operated with or without incremental encoders
- Brushless DC-Servomotors operated with digital or analog Hall sensors
- Brushless DC-Servomotors operated without Hall sensors (sensorless Operation)
- Brushless DC-Servomotors operated with digital Hall sensors and incremental encoders
- Brushless DC-Servomotors operated with absolute encoders

Note: For version, see options and connection information.

Range of functions

Description	Intermittent operation with up to double the continuous current. Separate voltage supply for motor and electronics. Integrated speed control by means of PI controller. Sensorless operation by evaluating the back electromotive force (EMF). Setpoint input of the speed via PWM or analog voltage value. Switching input for defining the direction of rotation of the motor. Digital output, can be programmed either as frequency output or as error output
Additional functions	Integrated current limitation to protect against thermal overload. Can optionally be operated in voltage controller mode or fixed speed mode.

© DR. FRITZ FAULHABER GMBH & CO. KG
Specifications subject to change without notice.
www.faulhaber.com

Dimensional drawing

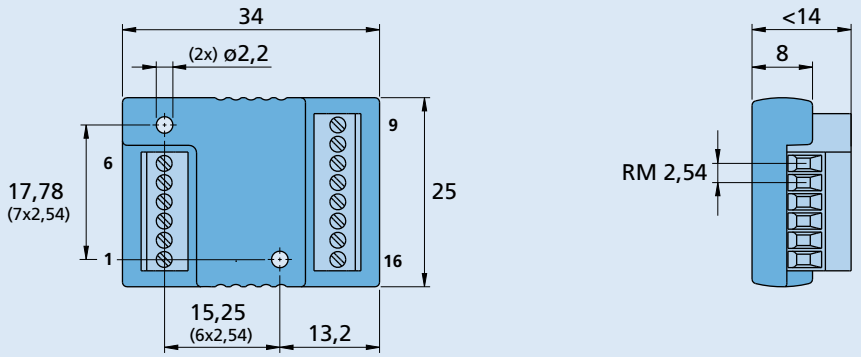

SC 1801 S

Options and connection information

Example product designation: **SC 1801 S 3533**

Option	Type	Description
3533	BL	Sensorless (high speed)
4763	BL	Absolute encoder 2 pole motors
4289	BL	Analog Hall sensors 2 pole motors
3980	BL	Absolute encoder 4 pole motors
4764	BL	Analog Hall sensors 4 pole motors
3530	BL	Digital Hall sensors 2 pole motors
3531	DC	Incremental encoder
6339	BL	Digital Hall sensors 4 pole motors
6340	BL	Digital Hall sensors 14 pole motors

Connection

No.	Function	No.	Function
1	U_P	9	Mot C
2	U_{mot}	10	Mot B
3	GND	11	Mot A
4	U_{nsoll}	12	SGND
5	DIR	13	V_{CC}
6	FG	14	Sens C
7	-	15	Sens B
8	-	16	Sens A

Note: For details on the connection assignment, see device manual SC.

Product combination

DC-Motors

0615 ... S
0816 ... SR
1016 ... SR
1024 ... SR
1219 ... G
1224 ... SR
1319 ... SR
1331 ... SR
1336 ... CXR
1516 ... S
1516 ... SR
1524 ... SR
1624 ... S
1717 ... SR
1724 ... SR
1727 ... CXR
1741 ... CXR
2224 ... SR
2230 ... S
2232 ... SR
2233 ... S
2237 ... CXR
1506 ... SR
1512 ... SR
2607 ... SR
2619 ... SR

Brushless DC-Motors

0824 ... B
1028 ... B
1218 ... B
1226 ... B
1628 ... B
2036 ... B
2214 ... BXT R
2214 ... BXT H
2232 ... BX4
1509 ... B
1515 ... B
2610 ... B
2622 ... B

Cables / Accessories

To view our large range of accessory parts, please refer to the „Accessories“ chapter.

© DR. FRITZ FAULHABER GMBH & CO. KG
Specifications subject to change without notice.

Speed Controllers

2-Quadrant PWM configurable via PC

SC 2402 P

Values at 22°C		SC 2402 P	
Power supply electronic	U_P	5 ... 24	V DC
Power supply motor	U_{mot}	0 ... 24	V DC
PWM switching frequency [1]	f_{PWM}	96	kHz
Efficiency electronic	η	95	%
Max. continuous output current	I_{cont}	2	A
Max. peak output current [2]	I_{max}	4	A
Standby current for electronic (@ U_P=24V)	I_{el}	0,03	A
Operating temperature range		-25 ... +60	°C
Mass		14	g

[1] for brushless DC-Motors without Hall sensors: f_{PWM} = 24 kHz
[2] S2 mode for max. 6s

Interfaces

Configuration of setpoint specifications, operating mode and controller parameters via USB programming adapter for Speed Controller.
Note: The programming adapter cannot be directly connected in this version of the Speed Controller.

Basic features

Speed-controlled operation of:

- DC-Micromotors operated with or without incremental encoders
- Brushless DC-Servomotors operated with digital or analog Hall sensors
- Brushless DC-Servomotors operated without Hall sensors (sensorless Operation)
- Brushless DC-Servomotors operated with digital Hall sensors and incremental encoders
- Brushless DC-Servomotors operated with absolute encoders

Note: For version, see options and connection information.

Range of functions

Description	Intermittent operation with up to double the continuous current.
	Separate voltage supply for motor and electronics.
	Integrated speed control by means of PI controller.
	Sensorless operation by evaluating the back electromotive force (EMF).
	Setpoint input of the speed via PWM or analog voltage value.
	Switching input for defining the direction of rotation of the motor.
	Digital output, can be programmed either as frequency output or as error output
Additional functions	Integrated current limitation to protect against thermal overload.
	Can optionally be operated in voltage controller mode or fixed speed mode.

© DR. FRITZ FAULHABER GMBH & CO. KG
Specifications subject to change without notice.
www.faulhaber.com

Dimensional drawing

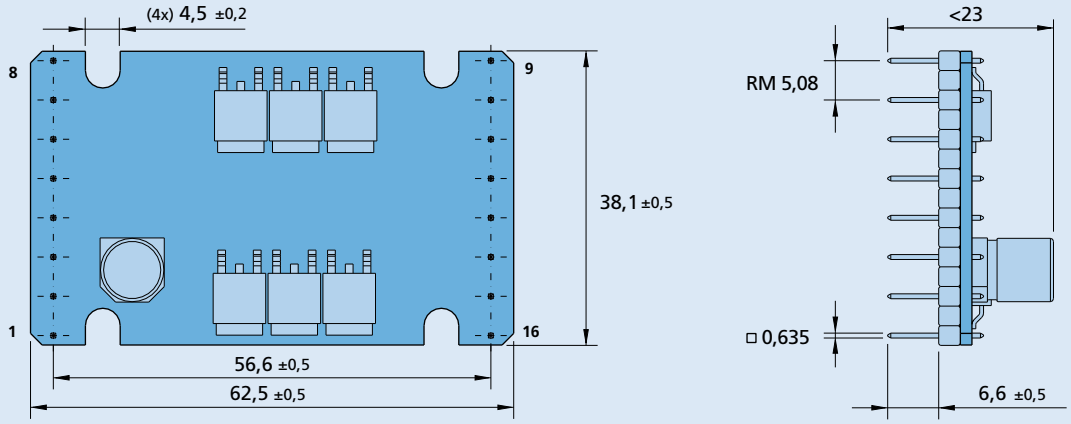

SC 2402 P

Options and connection information

Example product designation: **SC 2402 P 3530**

Option	Type	Description
4763	BL	Absolute encoder 2 pole motors
4289	BL	Analog Hall sensors 2 pole motors
3980	BL	Absolute encoder 4 pole motors
4764	BL	Analog Hall sensors 4 pole motors
3530	BL	Digital Hall sensors 2 pole motors
3531	DC	Incremental encoder
4475	BL	Digital Hall sensors + incremental encoder
4476	BL	Digital Hall sensors + brake/enable
6339	BL	Digital Hall sensors 4 pole motors
6340	BL	Digital Hall sensors 14 pole motors

Connection

No.	Function	No.	Function
1	U_P	9	Mot C
2	U_{mot}	10	Mot B
3	GND	11	Mot A
4	U_{nsoll}	12	SGND
5	DIR	13	V_{CC}
6	FG	14	Sens C
7	IO 2	15	Sens B
8	IO 1	16	Sens A

Note: For details on the connection assignment, see device manual SC.

Product combination

DC-Motors	Brushless DC-Motors	Cables / Accessories
1741 ... CXR	0620 ... B	To view our large range of accessory parts, please refer to the „Accessories“ chapter.
2224 ... SR	0824 ... B	
2230 ... S	1028 ... B	
2232 ... SR	1218 ... B	
2233 ... S	1226 ... B	
2237 ... CXR	1628 ... B	
2342 ... CR	2036 ... B	
2642 ... CR	2214 ... BXT R	
2642 ... CXR	2214 ... BXT H	
2657 ... CR	2232 ... BX4	
2657 ... CXR	2250 ... BX4	
3242 ... CR	2444 ... B	
3257 ... CR	3056 ... B	
3272 ... CR	3216 ... BXT R	
	3216 ... BXT H	
	3242 ... BX4	

© DR. FRITZ FAULHABER GMBH & CO. KG
Specifications subject to change without notice.

Speed Controllers

2-Quadrant PWM configurable via PC

SC 2804 S

Values at 22°C		SC 2804 S	
Power supply electronic	U_P	5 ... 28	V DC
Power supply motor	U_{mot}	0 ... 28	V DC
PWM switching frequency [1]	f_{PWM}	96	kHz
Efficiency electronic	η	95	%
Max. continuous output current	I_{cont}	4	A
Max. peak output current [2]	I_{max}	8	A
Standby current for electronic (@ U_P=24V)	I_{el}	0,03	A
Operating temperature range		-25 ... +60	°C
Housing material		zinc, black coated	
Mass		160	g

[1] for brushless DC-Motors without Hall sensors: f_{PWM} = 24 kHz
[2] S2 mode for max. 6s

Interfaces

Configuration of setpoint specifications, operating mode and controller parameters via USB programming adapter for Speed Controller.

Basic features

Speed-controlled operation of:

- DC-Micromotors operated with or without incremental encoders
- Brushless DC-Servomotors operated with digital or analog Hall sensors
- Brushless DC-Servomotors operated without Hall sensors (sensorless Operation)
- Brushless DC-Servomotors operated with digital Hall sensors and incremental encoders
- Brushless DC-Servomotors operated with absolute encoders

Note: For version, see options and connection information.

Range of functions

Description	Intermittent operation with up to double the continuous current.
	Separate voltage supply for motor and electronics.
	Integrated speed control by means of PI controller.
	Sensorless operation by evaluating the back electromotive force (EMF).
	Setpoint input of the speed via PWM or analog voltage value.
	Switching input for defining the direction of rotation of the motor.
	Digital output, can be programmed either as frequency output or as error output
Additional functions	Integrated current limitation to protect against thermal overload.
	Can optionally be operated in voltage controller mode or fixed speed mode.

© DR. FRITZ FAULHABER GMBH & CO. KG
Specifications subject to change without notice.
www.faulhaber.com

Dimensional drawing

Scale reduced

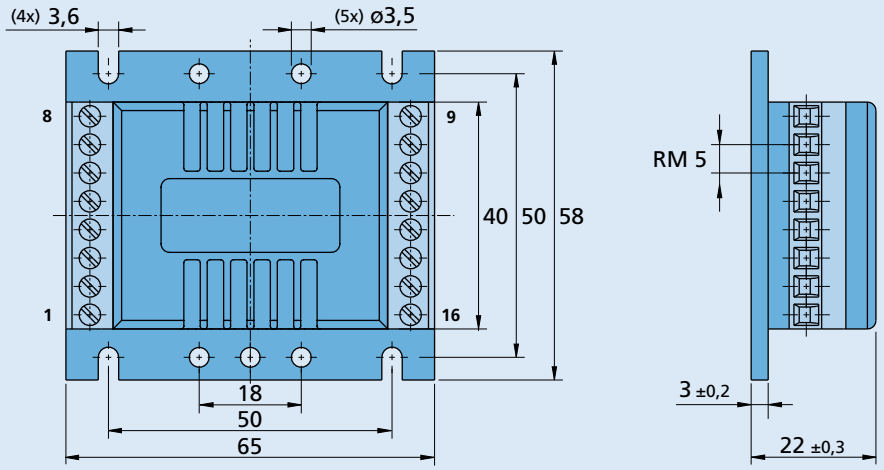

SC 2804 S

Options and connection information

Example product designation: **SC 2804 S 3530**

Option	Type	Description
4763	BL	Absolute encoder 2 pole motors
4289	BL	Analog Hall sensors 2 pole motors
3980	BL	Absolute encoder 4 pole motors
4764	BL	Analog Hall sensors 4 pole motors
3530	BL	Digital Hall sensors 2 pole motors
3531	DC	Incremental encoder
4475	BL	Digital Hall sensors + incremental encoder
4476	BL	Digital Hall sensors + brake/enable
6339	BL	Digital Hall sensors 4 pole motors
6340	BL	Digital Hall sensors 14 pole motors

Connection

No.	Function	No.	Function
1	U_P	9	Mot C
2	U_{mot}	10	Mot B
3	GND	11	Mot A
4	U_{nsoll}	12	SGND
5	DIR	13	V_{CC}
6	FG	14	Sens C
7	IO 2	15	Sens B
8	IO 1	16	Sens A

Note: For details on the connection assignment, see device manual SC.

Product combination

DC-Motors

1741 ... CXR
2224 ... SR
2230 ... S
2232 ... SR
2233 ... S
2237 ... CXR
2342 ... CR
2642 ... CR
2642 ... CXR
2657 ... CR
2657 ... CXR
2668 ... CR
3242 ... CR
3257 ... CR
3272 ... CR
3863 ... CR
3890 ... CR

Brushless DC-Motors

0620 ... B
0824 ... B
1028 ... B
1218 ... B
1226 ... B
1628 ... B
2036 ... B
2057 ... B
2214 ... BXT R
2214 ... BXT H
2232 ... BX4
2250 ... BX4
2444 ... B
3056 ... B
3216 ... BXT R
3216 ... BXT H
3242 ... BX4
3268 ... BX4
3564 ... B
4221 ... BXT R
4221 ... BXT H

Cables / Accessories

To view our large range of accessory parts, please refer to the „Accessories“ chapter.

© DR. FRITZ FAULHABER GMBH & CO. KG
Specifications subject to change without notice.

Speed Controllers

4-Quadrant PWM configurable via PC

SC 5004 P

Values at 22°C		SC 5004 P	
Power supply electronic	U_P	6 ... 50	V DC
Power supply motor	U_{mot}	0 ... 50	V DC
PWM switching frequency [1]	f_{PWM}	96	kHz
Efficiency electronic	η	95	%
Max. continuous output current	I_{cont}	4	A
Max. peak output current [2]	I_{max}	8	A
Standby current for electronic (@ U_P=24V)	I_{el}	0,1	A
Operating temperature range		-25 ... +60	°C
Mass		14	g

[1] for brushless DC-Motors without Hall sensors: f_{PWM} = 24 kHz
[2] S2 mode for max. 6s

Interfaces

Configuration of setpoint specifications, operating mode and controller parameters via USB programming adapter for Speed Controller.
Note: The programming adapter cannot be directly connected in this version of the Speed Controller.

Basic features

Speed-controlled operation of:

- DC-Micromotors operated with incremental encoders
- Brushless DC-Servomotors operated with digital or analog Hall sensors
- Brushless DC-Servomotors operated with digital Hall sensors and incremental encoders
- Brushless DC-Servomotors operated with absolute encoders

Note: For version, see options and connection information.

Range of functions

Description	Intermittent operation with up to double the continuous current.
	Separate voltage supply for motor and electronics.
	Integrated speed control by means of PI controller.
	Setpoint input of the speed via PWM or analog voltage value.
	Switching input for defining the direction of rotation of the motor.
	Digital output, can be programmed either as frequency output or as error output
Additional functions	Integrated current limitation to protect against thermal overload.
	Can optionally be operated in voltage controller mode or fixed speed mode.

© DR. FRITZ FAULHABER GMBH & CO. KG
Specifications subject to change without notice.
www.faulhaber.com

Dimensional drawing

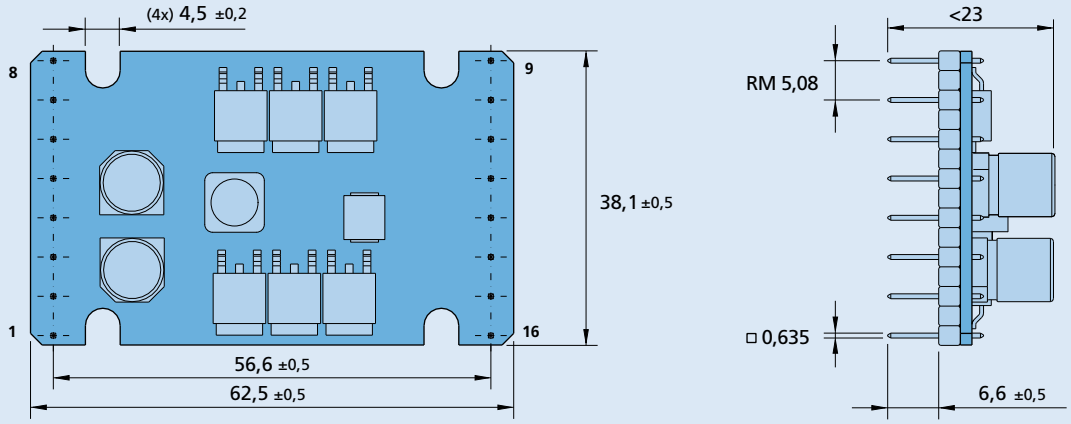

SC 5004 P

Options and connection information

Example product designation: **SC 5004 P 3530**

Option	Type	Description
4763	BL	Absolute encoder 2 pole motors
4289	BL	Analog Hall sensors 2 pole motors
3980	BL	Absolute encoder 4 pole motors
4764	BL	Analog Hall sensors 4 pole motors
3530	BL	Digital Hall sensors 2 pole motors
3531	DC	Incremental encoder
4475	BL	Digital Hall sensors + incremental encoder
4476	BL	Digital Hall sensors + brake/enable
6339	BL	Digital Hall sensors 4 pole motors
6340	BL	Digital Hall sensors 14 pole motors

Connection

No.	Function	No.	Function
1	U_P	9	Mot C
2	U_{mot}	10	Mot B
3	GND	11	Mot A
4	U_{nsoll}	12	SGND
5	DIR	13	V_{CC}
6	FG	14	Sens C
7	IO 2	15	Sens B
8	IO 1	16	Sens A

Note: For details on the connection assignment, see device manual SC.

Product combination

DC-Motors

2237 ... CXR
2342 ... CR
2642 ... CR
2642 ... CXR
2657 ... CR
2657 ... CXR
2668 ... CR
3242 ... CR
3257 ... CR
3272 ... CR
3863 ... CR
3890 ... CR

Brushless DC-Motors

1645 ... BHS
1660 ... BHS
1660 ... BHT
2036 ... B
2057 ... B
2057 ... BA
2232 ... BX4
2250 ... BX4
2444 ... B
3056 ... B
3242 ... BX4
3268 ... BX4
3564 ... B
4221 ... BXT R
4221 ... BXT H
4490 ... B
4490 ... BS

Cables / Accessories

To view our large range of accessory parts, please refer to the „Accessories“ chapter.

© DR. FRITZ FAULHABER GMBH & CO. KG
Specifications subject to change without notice.

Speed Controllers

4-Quadrant PWM configurable via PC

SC 5008 S

Values at 22°C		SC 5008 S	
Power supply electronic	U_P	6 ... 50	V DC
Power supply motor	U_{mot}	0 ... 50	V DC
PWM switching frequency [1]	f_{PWM}	96	kHz
Efficiency electronic	η	95	%
Max. continuous output current	I_{cont}	8	A
Max. peak output current [2]	I_{max}	16	A
Standby current for electronic (@ U_P=24V)	I_{el}	0,1	A
Operating temperature range		-25 ... +60	°C
Housing material		zinc, black coated	
Mass		160	g

[1] for brushless DC-Motors without Hall sensors: f_{PWM} = 24 kHz
[2] S2 mode for max. 6s

Interfaces

Configuration of setpoint specifications, operating mode and controller parameters via USB programming adapter for Speed Controller.

Basic features

Speed-controlled operation of:

- DC-Micromotors operated with incremental encoders
- Brushless DC-Servomotors operated with digital or analog Hall sensors
- Brushless DC-Servomotors operated with digital Hall sensors and incremental encoders
- Brushless DC-Servomotors operated with absolute encoders

Note: For version, see options and connection information.

Range of functions

Description	Intermittent operation with up to double the continuous current.
	Separate voltage supply for motor and electronics.
	Integrated speed control by means of PI controller.
	Setpoint input of the speed via PWM or analog voltage value.
	Switching input for defining the direction of rotation of the motor.
	Digital output, can be programmed either as frequency output or as error output
Additional functions	Integrated current limitation to protect against thermal overload.
	Can optionally be operated in voltage controller mode or fixed speed mode.

© DR. FRITZ FAULHABER GMBH & CO. KG
Specifications subject to change without notice.
www.faulhaber.com

Dimensional drawing

Scale reduced

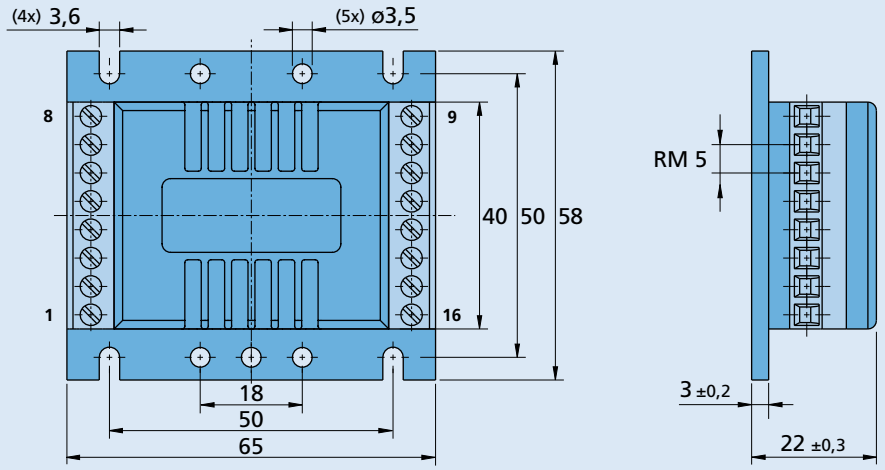

SC 5008 S

Options and connection information

Example product designation: **SC 5008 S 3530**

Option	Type	Description
4763	BL	Absolute encoder 2 pole motors
4289	BL	Analog Hall sensors 2 pole motors
3980	BL	Absolute encoder 4 pole motors
4764	BL	Analog Hall sensors 4 pole motors
3530	BL	Digital Hall sensors 2 pole motors
3531	DC	Incremental encoder
4475	BL	Digital Hall sensors + incremental encoder
4476	BL	Digital Hall sensors + brake/enable
6339	BL	Digital Hall sensors 4 pole motors
6340	BL	Digital Hall sensors 14 pole motors

Connection

No.	Function	No.	Function
1	U_P	9	Mot C
2	U_{mot}	10	Mot B
3	GND	11	Mot A
4	U_{nsoll}	12	SGND
5	DIR	13	V_{CC}
6	FG	14	Sens C
7	IO 2	15	Sens B
8	IO 1	16	Sens A

Note: For details on the connection assignment, see device manual SC.

Product combination

DC-Motors	Brushless DC-Motors	Cables / Accessories
2237 ... CXR	1645 ... BHS	To view our large range of accessory parts, please refer to the „Accessories“ chapter.
2342 ... CR	1660 ... BHS	
2642 ... CR	1660 ... BHT	
2642 ... CXR	2057 ... B	
2657 ... CR	2057 ... BA	
2657 ... CXR	2232 ... BX4	
2668 ... CR	2250 ... BX4	
3242 ... CR	2264 ... BP4	
3257 ... CR	2444 ... B	
3272 ... CR	3056 ... B	
3863 ... CR	3242 ... BX4	
3890 ... CR	3268 ... BX4	
	3274 ... BP4	
	3564 ... B	
	4221 ... BXT R	
	4221 ... BXT H	
	4490 ... B	
	4490 ... BS	

© DR. FRITZ FAULHABER GMBH & CO. KG
Specifications subject to change without notice.

Drive electronics

Motion Controllers

MC 3001 P	for brushless, DC- and linear motors	1.4 A
MC 3001 B	for brushless, DC- and linear motors	1 A
MC 3603 S	for brushless, DC- and linear motors	3 A
MC 5004 P	for brushless, DC- and linear motors	4 A
MC 5005 S	for brushless, DC- and linear motors	5 A
MC 5010 S	for brushless, DC- and linear motors	10 A
MCST 3601	for Stepper motors	1.1 A

Backwards

Motion Controllers

V3.0, 4-Quadrant PWM
with RS232 or CANopen interface

MC 3001 P

Values at 22°C		MC 3001 P	
Power supply electronic	U_P	6 ... 30	V DC
Power supply motor	U_{mot}	6 ... 30	V DC
PWM switching frequency	f_{PWM}	100	kHz
Efficiency electronic	η	95	%
Max. continuous output current [1]	I_{cont}	1,4	A
Max. peak output current [2]	I_{max}	5	A
Standby current for electronic (@ U_P=24V)	I_{el}	0,04	A
Operating temperature range		-40 ... +85	°C
Mass		5	g

[1] I_{cont} = 2,4A @ U_{mot} = 12V, I_{cont}= 1,7A @ U_{mot} = 24V
[2] S2 mode for max. 2s

Interfaces	MC 3001 P RS/CO
Configuration from Motion Manager 6.7	RS232 / CANopen / USB
Fieldbus	RS232 / CANopen

Basic features

- Control of brushless, DC- and linear motors
- Supported sensor systems: absolute encoders, incremental encoders (optical or magnetic), Hall sensors (digital or analog), tachometers
- Positioning resolution when using analog Hall sensors as position encoder: 4096 increments per revolution
- 3 digital inputs, 2 digital outputs, 2 analog inputs, flexible configuration
- Setpoint specification via fieldbus, quadrature signal, pulse and direction or analog inputs
- Optional stand-alone operation via application programs in all interface versions

Range of functions

Operating modes	PP, PV, PT, CSP, CSV, CST and homing acc. to IEC 61800-7-201 or IEC 61800-7-301 as well as position-, speed- and torque control via analog setpoint or voltage controller
Speed range for brushless motors with number of pole pairs 1	0 min^{-1} … 30 000 min^{-1} with sinusoidal commutation (optionally to 60 000 min^{-1} with block commutation)
Application programs	Max. 8 application programs (BASIC), one of which is an autostart function
Additional functions	Touch-probe input, connection of a second incremental encoder, control of a holding brake
Indicator	LEDs for displaying the operating state Trace as recorder (scope function) or logger
Motor types	DC, BL- and linear motors

© DR. FRITZ FAULHABER GMBH & CO. KG
Specifications subject to change without notice.
www.faulhaber.com

Dimensional drawing

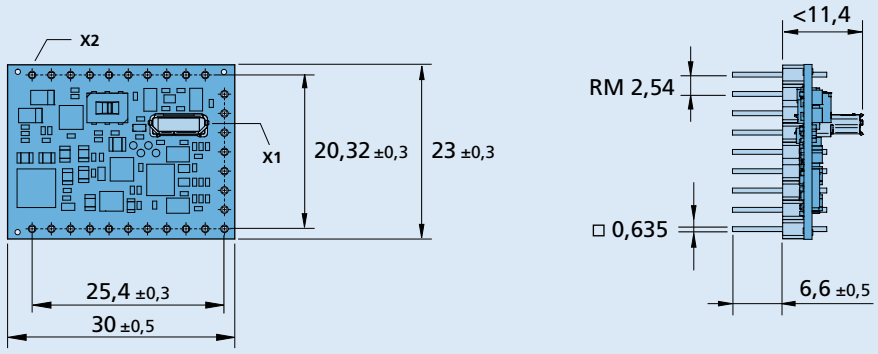

MC 3001 P RS/CO

Options and connection information

Example product designation: **MC 3001 P RS/CO**

Option	Type	Description

Connection

Name	Function	Description
X1	USB	USB micro connector
X2	Input/Output	Motor and electronic power supply, fieldbus, analog and digital input/output, motor phases, sensors.

Motherboard MB1 MC 3001 combination	Part No.:
for BL/DC motors in general, including hall sensors and/or encoder	6500.01802
for DC motors plus encoder IE2, IEH2, IEH3(L)	6500.01807
for DC motors plus encoder IE3(L), IER3(L), IERS3(L)	6500.01808
for DC motors plus encoder PA2-100, HEM3	6500.01809
for BL motors plus encoder AESM, IEM3	6500.01810
for BL/DC motors plus encoder PA2-50, HXM3	6500.01811
for DC motors plus encoder IEP3-4096	6500.01879

Note: For details on the connection assignment, see device manual for the MC 3001.
For details on Motherboard connections and functions see device manual MC 3001.

Product combination

DC-Motors

0615 ... S
0816 ... SR
1016 ... SR
1024 ... SR
1224 ... SR
1319 ... SR
1331 ... SR
1336 ... CXR
1516 ... SR
1524 ... SR
1717 ... SR
1724 ... SR
1727 ... CXR
1741 ... CXR
2224 ... SR
2232 ... SR
2237 ... CXR
2342 ... CR
2642 ... CR
2642 ... CXR

Brushless DC-Motors

0620 ... B
0824 ... B
1028 ... B
1218 ... B
1226 ... B
1628 ... B
2036 ... B
2214 ... BXT H
2232 ... BX4
2250 ... BX4
2444 ... B
3056 ... B

Linear DC-Servomotors

LM 0830 ... 01
LM 1247 ... 11
LM 1483 ... 11
LM 2070 ... 11

Cables / Accessories

To view our large range of accessory parts, please refer to the „Accessories“ chapter.

© DR. FRITZ FAULHABER GMBH & CO. KG
Specifications subject to change without notice.

Motion Controllers

V3.0, 4-Quadrant PWM
with RS232 or CANopen interface

MC 3001 B

Values at 22°C		MC 3001 B	
Power supply electronic	U_P	6 ... 30	V DC
Power supply motor	U_{mot}	6 ... 30	V DC
PWM switching frequency	f_{PWM}	100	kHz
Efficiency electroni	η	95	%
Max. continuous output current [1]	I_{cont}	1	A
Max. peak output current [2]	I_{max}	5	A
Standby current for electronic (@ U_P=24V)	I_{el}	0,04	A
Operating temperature range		-40 ... +85	°C
Mass		2	g

[1] I_{cont} = 2,1A @ U_{mot} = 12V, I_{cont}= 1,3A @ U_{mot} = 24V
[2] S2 mode for max. 2s

Interfaces	MC 3001 B RS/CO
Configuration from Motion Manager 6.	RS232 / CANopen / USB
Fieldbus	RS232 / CANopen

Basic features

- Control of brushless, DC- and linear motors
- Supported sensor systems: absolute encoders, incremental encoders (optical or magnetic), Hall sensors (digital or analog), tachometers
- Positioning resolution when using analog Hall sensors as position encoder: 4096 increments per revolution
- 3 digital inputs, 2 digital outputs, 2 analog inputs, flexible configuration
- Setpoint specification via fieldbus, quadrature signal, pulse and direction or analog inputs
- Optional stand-alone operation via application programs in all interface versions

Range of functions

Operating modes	PP, PV, PT, CSP, CSV, CST and homing acc. to IEC 61800-7-201 or IEC 61800-7-301 as well as position-, speed- and torque control via analog setpoint or voltage controller
Speed range for brushless motors with number of pole pairs 1	0 min^{-1} … 30 000 min^{-1} with sinusoidal commutation (optionally to 60 000 min^{-1} with block commutation)
Application programs	Max. 8 application programs (BASIC), one of which is an autostart function
Additional functions	Touch-probe input, connection of a second incremental encoder, control of a holding brake
Indicator	LEDs for displaying the operating state Trace as recorder (scope function) or logger
Motor types	DC, BL- and linear motors

© DR. FRITZ FAULHABER GMBH & CO. KG
Specifications subject to change without notice
www.faulhaber.com

Dimensional drawing

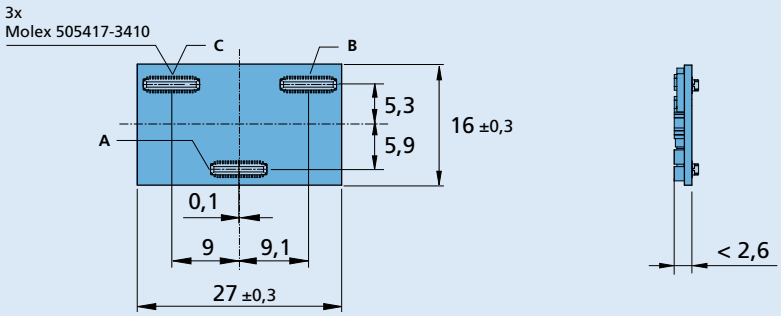

MC 3001 B RS/CO

Options and connection information

Example product designation: **MC 3001 B RS/CO**

Option	Type	Description

Connection

Name	Function	Description
A,B,C	Micro board to board connector	Analog and digital input/output, motor and eletronic power supply, fieldbus, motor phases, sensors

Motherboard MB1 MC 3001 combination	Part No.:
for BL/DC motors in general, including hall sensors and/or encoder	6500.01802
for DC motors plus encoder IE2, IEH2, IEH3(L)	6500.01807
for DC motors plus encoder IE3(L), IER3(L), IERS3(L)	6500.01808
for DC motors plus encoder PA2-100, HEM3	6500.01809
for BL motors plus encoder AESM, IEM3	6500.01810
for BL/DC motors plus encoder PA2-50, HXM3	6500.01811
for DC motors plus encoder IEP3-4096	6500.01879

Note: For details on the connection assignment, see device manual for the MC 3001.
For details on Motherboard connections and functions see device manual MC 3001.

Product combination

DC-Motors

0615 ... S
0816 ... SR
1016 ... SR
1024 ... SR
1224 ... SR
1319 ... SR
1331 ... SR
1336 ... CXR
1516 ... SR
1524 ... SR
1717 ... SR
1724 ... SR
1727 ... CXR
1741 ... CXR
2224 ... SR
2232 ... SR
2237 ... CXR
2342 ... CR
2642 ... CR
2642 ... CXR

Brushless DC-Motors

0620 ... B
0824 ... B
1028 ... B
1218 ... B
1226 ... B
1628 ... B
2036 ... B
2214 ... BXT H
2232 ... BX4
2250 ... BX4
2444 ... B
3056 ... B

Linear DC-Servomotors

LM 0830 ... 01
LM 1247 ... 11
LM 1483 ... 11
LM 2070 ... 11

Cables / Accessories

To view our large range of accessory parts, please refer to the „Accessories“ chapter.

© DR. FRITZ FAULHABER GMBH & CO. KG
Specifications subject to change without notice

NEW

FAULHABER

Motion Controllers

V3.0, 4-Quadrant PWM
with RS232, CANopen or EtherCAT interface

MC 3603 S

Values at 22°C		MC 3603 S	
Power supply electronic	U_P	6 ... 36	V DC
Power supply motor	U_{mot}	0 ... 36	V DC
PWM switching frequency	f_{PWM}	100	kHz
Efficiency electronic	η	95	%
Max. continuous output current	I_{cont}	3	A
Max. peak output current [1]	I_{max}	9	A
Standby current for electronic (@ U_P=24V)	I_{el}	RS / CO: 0,05 ET: 0,08	A
Operating temperature range		-40 ... +85	°C
Mass		RS / CO: 45 ET: 68	g

[1] S2 mode for max. 5s

Interfaces	MC 3603 S RS/CO	MC 3603 S ET
Configuration from Motion Manager 6.7	RS232 / USB	RS232 / USB
Fieldbus	RS232 / CANopen	EtherCAT

Basic features

- Control of brushless, DC- and linear motors
- Supported sensor systems: absolute encoders, incremental encoders (optical or magnetic), Hall sensors (digital or analog), tachometers
- Positioning resolution when using analog Hall sensors as position encoder: 4096 increments per revolution
- 3 digital inputs, 2 digital outputs, 2 analog inputs, flexible configuration
- Setpoint specification via fieldbus, quadrature signal, pulse and direction or analog inputs
- Optional stand-alone operation via application programs in all interface versions

Range of functions

Operating modes	PP, PV, PT, CSP, CSV, CST and homing acc. to IEC 61800-7-201 or IEC 61800-7-301 as well as position-, speed- and torque control via analog setpoint or voltage controller
Speed range for brushless motors with number of pole pairs 1	0 min^{-1} … 30 000 min^{-1} with sinusoidal commutation (optionally to 60 000 min^{-1} with block commutation)
Application programs	Max. 8 application programs (BASIC), one of which is an autostart function
Additional functions	Touch-probe input, connection of a second incremental encoder, control of a holding brake
Indicator	LEDs for displaying the operating state Trace as recorder (scope function) or logger
Motor types	DC, BL- and linear motors

© DR. FRITZ FAULHABER GMBH & CO. KG
Specifications subject to change without notice.
www.faulhaber.com

Dimensional drawing

Scale reduced

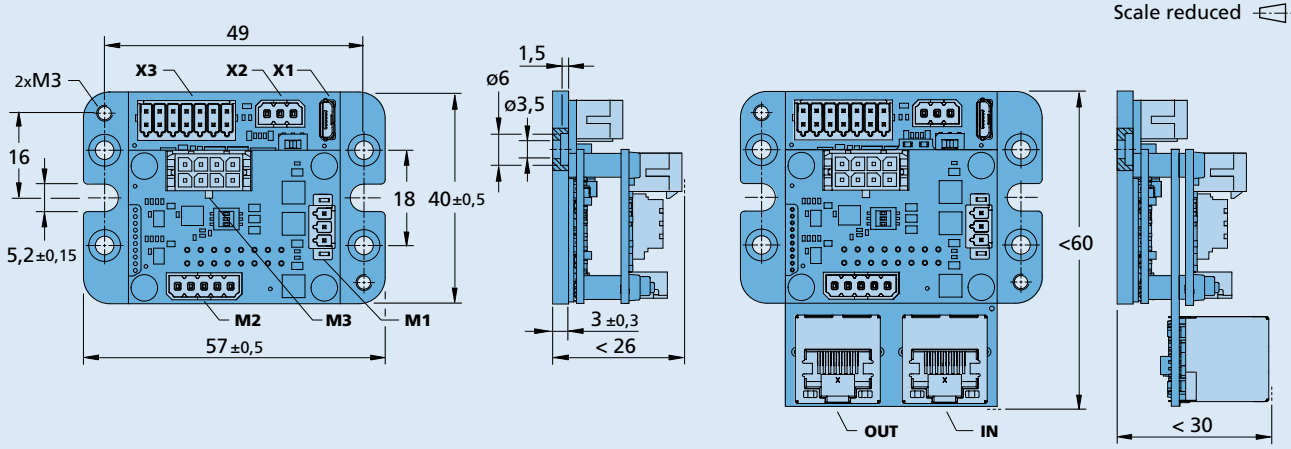

MC 3603 S RS/CO **MC 3603 S ET**

Options and connection information

Example product designation: **MC 3603 S ET 6889**

Option	Type	Description
6889	Encoder combination	For DC-Motors with Encoder IE2, IEH2, IEH3, IEH3L
6890	Encoder combination	For DC-Motors with Encoder IE3, IER3, IERS3, IE3L, IER3L, IERS3L

Connection

	Function	Description
X1	USB configuration interface	USB micro connector
X2	Fieldbus	RS 232 or CANopen
X3	Input/Output	Motor and electronic power supply, analog and digital input/output
M1	Motor phases	Brushless or DC-Motors
M2	Hall sensors	Digital or analog
M3	Encoder	Absolute or incremental
IN	Fieldbus	EtherCAT IN
OUT	Fieldbus	EtherCAT OUT

Note: For details on the connection assignment, see device manual for the MC 3603. For details on Encoder connections and functions see device manual MC 3603.

Product combination

DC-Motors

1319 ... SR
1331 ... SR
1336 ... CXR
1516 ... SR
1524 ... SR
1717 ... SR
1724 ... SR
1727 ... CXR
1741 ... CXR
2224 ... SR
2232 ... SR
2237 ... CXR
2342 ... CR
2642 ... CR
2642 ... CXR
2657 ... CR
2657 ... CXR
2668 ... CR
3242 ... CR
3257 ... CR

Brushless DC-Motors

1218 ... B
1226 ... B
1628 ... B
1645 ... BHS
1660 ... BHT
2036 ... B
2057 ... B
2214 ... BXT H
2232 ... BX4
2250 ... BX4
2444 ... B
3056 ... B
3216 ... BXT H
3242 ... BX4
3268 ... BX4
4221 ... BXT H

Linear DC-Servomotors

LM 1247 ... 11
LM 1483 ... 11
LM 2070 ... 11

Cables / Accessories

An extensive range of accessories is available for the products of the MC 3603 controller series.

Furthermore, connection cables are available for controller and motor supply, sensors and interfaces as well as connector sets for the motor and supply side.

To view our large range of accessory parts, please refer to the „Accessories“ chapter.

© DR. FRITZ FAULHABER GMBH & CO. KG
Specifications subject to change without notice.

Motion Controllers

V3.0, 4-Quadrant PWM
with RS232, CANopen or EtherCAT interface

MC 5004 P

Values at 22°C		MC 5004 P	
Power supply electronic	U_P	12 ... 50	V DC
Power supply motor	U_{mot}	0 ... 50	V DC
PWM switching frequency	f_{PWM}	100	kHz
Efficiency electronic	η	95	%
Max. continuous output current	I_{cont}	4	A
Max. peak output current [1]	I_{max}	12	A
Standby current for electronic (@ U_P=24V)	I_{el}	RS / CO: 0,06 ET: 0,07	A
Operating temperature range		-40 ... +85	°C
Mass		RS / CO: 22 ET: 47	g

[1] S2 mode for max. 1s

Interfaces	MC 5004 P RS/CO	MC 5004 P ET
Configuration from Motion Manager 6.0	RS232 / USB	RS232 / USB
Fieldbus	RS232 / CANopen	EtherCAT

Basic features

- Control of brushless, DC- and linear motors
- Supported sensor systems: absolute encoders (AES or SSI), incremental encoders (optical or magnetic), Hall sensors (digital or analog), tachometers
- Positioning resolution when using analog Hall sensors as position encoder: 4096 increments per revolution
- 8 digital inputs, 3 digital outputs, 2 analog inputs, flexible configuration
- Setpoint specification via fieldbus, quadrature signal, pulse and direction or analog inputs
- Optional stand-alone operation via application programs in all interface versions

Range of functions

Operating modes	PP, PV, PT, CSP, CSV, CST and homing acc. to IEC 61800-7-201 or IEC 61800-7-301 as well as position-, speed- and torque control via analog setpoint or voltage controller
Speed range for brushless motors with number of pole pairs 1	0 min^{-1} ... 30 000 min^{-1} with sinusoidal commutation (optionally to 60 000 min^{-1} with block commutation)
Application programs	Max. 8 application programs (BASIC), one of which is an autostart function
Additional functions	Touch-probe input, connection of a second incremental encoder, control of a holding brake
Indicator	LEDs for displaying the operating state Trace as recorder (scope function) or logger
Motor types	DC, BL- and linear motors

© DR. FRITZ FAULHABER GMBH & CO. KG
Specifications subject to change without notice.
www.faulhaber.com

Dimensional drawing

Scale reduced

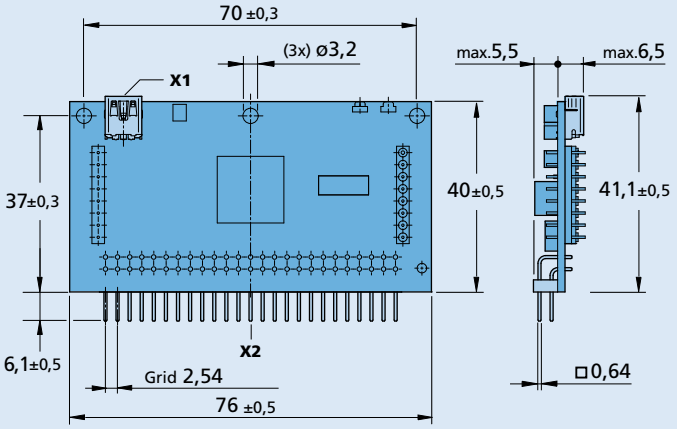

MC 5004 P RS/CO

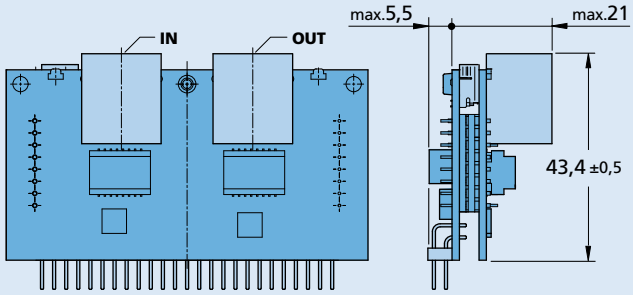

MC 5004 P ET

Options and connection information

Example product designation: **MC 5004 P ET FC**

Option	Type	Description
FC	EtherCAT IN/OUT 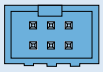	Interface connector DIN, for use in combination with flat cables (see chapter "accessories")
5621	Multi-pin connector	Horizontal PCB assembly

Connection

Name	Function	Description
X1	USB configuration interface	USB
X2	Pin Header	Analog and digital input/output, motor and eletronic, power supply, fieldbus, motor phases, sensors
IN	Fieldbus	EtherCAT IN
OUT	Fieldbus	EtherCAT OUT

Note: For details on the connection assignment, see device manual for the MC 5004.

Product combination

DC-Motors

1319 ... SR
1331 ... SR
1336 ... CXR
1516 ... SR
1524 ... SR
1717 ... SR
1724 ... SR
1727 ... CXR
1741 ... CXR
2224 ... SR
2232 ... SR
2237 ... CXR
2342 ... CR
2642 ... CR
2642 ... CXR
2657 ... CR
2657 ... CXR
2668 ... CR
3242 ... CR
3257 ... CR
3272 ... CR

Brushless DC-Motors

1218 ... B
1226 ... B
1628 ... B
1645 ... BHS
1660 ... BHT
2036 ... B
2057 ... B
2214 ... BXT H
2232 ... BX4
2250 ... BX4
2444 ... B
3056 ... B
3216 ... BXT H
3242 ... BX4
3268 ... BX4
4221 ... BXT H

Linear DC-Servomotors

LM 0830 ... 01
LM 1247 ... 11
LM 1483 ... 11
LM 2070 ... 11

Cables / Accessories

An extensive range of accessories is available for the products of the MC 5004 controller series.

A motherboard is available that can be used to operate up to four controllers in multi-axis operation (slave).

Furthermore, connection cables are available for controller and motor supply, sensors and interfaces as well as connector sets for the motor and supply side.

To view our large range of accessory parts, please refer to the „Accessories" chapter.

© DR. FRITZ FAULHABER GMBH & CO. KG
Specifications subject to change without notice.

Motion Controllers

V3.0, 4-Quadrant PWM
with RS232, CANopen or EtherCAT interface

MC 5005 S

Values at 22°C		MC 5005 S	
Power supply electronic	U_P	12 ... 50	V DC
Power supply motor	U_{mot}	0 ... 50	V DC
PWM switching frequency	f_{PWM}	100	kHz
Efficiency electronic	η	97	%
Max. continuous output current	I_{cont}	5	A
Max. peak output current [1]	I_{max}	15	A
Standby current for electronic (@ U_P=24V)	I_{el}	RS / CO: 0,06 ET: 0,07	A
Operating temperature range		-40 ... +85	°C
Housing material		aluminium, powder-coated	
Mass		RS / CO: 230 ET: 270	g

[1] S2 mode for max. 60s

Interfaces	MC 5005 S RS	MC 5005 S CO	MC 5005 S ET
Configuration from Motion Manager 6.0	RS232 / USB	CANopen / USB	RS232 / USB
Fieldbus	RS232	CANopen	EtherCAT

Basic features

- Control of brushless, DC- and linear motors
- Supported sensor systems: absolute encoders (AES or SSI), incremental encoders (optical or magnetic), Hall sensors (digital or analog), tachometers
- Positioning resolution when using analog Hall sensors as position encoder: 4096 increments per revolution
- 3 digital inputs, 2 digital outputs, 2 analog inputs, flexible configuration
- Setpoint specification via fieldbus, quadrature signal, pulse and direction or analog inputs
- Optional stand-alone operation via application programs in all interface versions

Range of functions

Operating modes	PP, PV, PT, CSP, CSV, CST and homing acc. to IEC 61800-7-201 or IEC 61800-7-301 as well as position-, speed- and torque control via analog setpoint or voltage controller
Speed range for brushless motors with number of pole pairs 1	0 min^{-1} ... 30 000 min^{-1} with sinusoidal commutation (optionally to 60 000 min^{-1} with block commutation)
Application programs	Max. 8 application programs (BASIC), one of which is an autostart function
Additional functions	Touch-probe input, connection of a second incremental encoder, control of a holding brake
Indicator	LEDs for displaying the operating state Trace as recorder (scope function) or logger
Motor types	DC, BL- and linear motors

© DR. FRITZ FAULHABER GMBH & CO. KG
Specifications subject to change without notice.
www.faulhaber.com

Dimensional drawing

Scale reduced

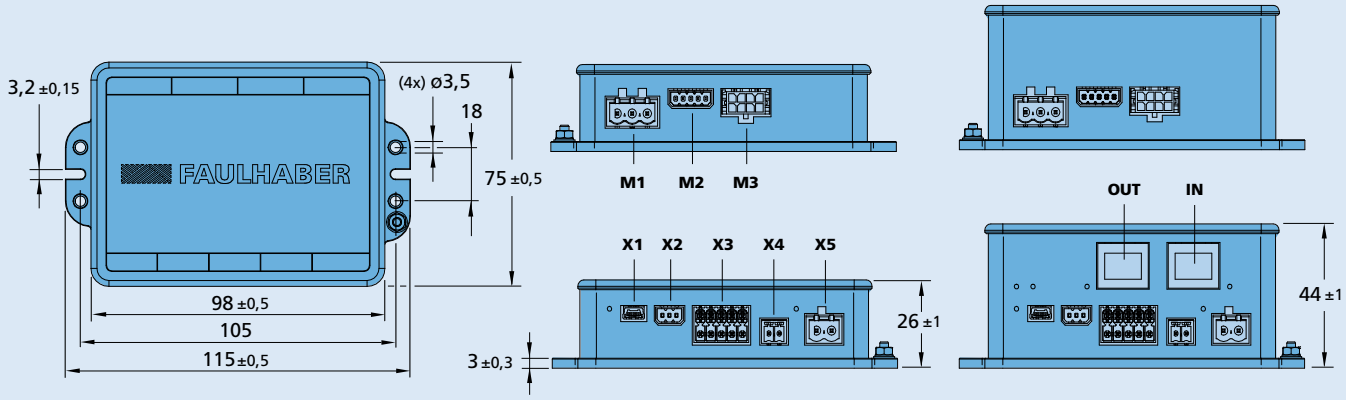

MC 5005 S **MC 5005 S RS/CO** **MC 5005 S ET**

Options and connection information

Example product designation: **MC 5005 S RS**

Option	Type	Description
6419	Encoder combination	Integrated terminating resistor for combination with absolute encoder AES-4096 L or AEMT-12/16 L

Connection

Name	Function	Input/Output	Description
X1	Configuration interface		USB
X2	Fieldbus		RS: RS232 CO: CANOpen
X3	Input/Output	DigIn1, DigIn2, DigIn3 DigOut1, DigOut2 AnIn1, AnIn2 U_{out} / GND	TTL or PLC level max. 0,7A cont. current ± 10V against AGND 5V
X4	Electronic power supply		
X5	Motor power supply		
M1	Motor phases	A, B, C	
M2	Hall sensors	A, B, C U_{out} / GND	digital or analog 5V
M3	Encoder	A, $\overline{A}$, B, $\overline{B}$, I, $\overline{I}$ EN, $\overline{EN}$, CLOCK, $\overline{CLOCK}$, DATA, $\overline{DATA}$ U_{out} / GND	max. 5MHz AES or SSI 5V
IN	Fieldbus		EtherCAT IN
OUT	Fieldbus		EtherCAT OUT

Note: For details on the connection assignment, see device manual for the MC 5005.

Product combination

DC-Motors

2237 ... CXR
2342 ... CR
2642 ... CR
2642 ... CXR
2657 ... CR
2657 ... CXR
2668 ... CR
3242 ... CR
3257 ... CR
3272 ... CR

Brushless DC-Motors

1645 ... BHS
1660 ... BHT
2036 ... B
2057 ... B
2214 ... BXT H
2232 ... BX4
2250 ... BX4
2444 ... B
3056 ... B
3216 ... BXT H
3242 ... BX4
3268 ... BX4
3564 ... B
4221 ... BXT H

Linear DC-Servomotors

LM 1247 ... 11
LM 1483 ... 11
LM 2070 ... 11

Cables / Accessories

An extensive range of accessories is available for the products of the MC 5010 and MC 5005 controller series.

Included here are connection cables for controller and motor supply, sensors and interfaces, connector sets for motor- and supply side as well as mechanical components for optional top hat rail mounting.

To view our large range of accessory parts, please refer to the „Accessories“ chapter.

© DR. FRITZ FAULHABER GMBH & CO. KG
Specifications subject to change without notice.

Motion Controllers

V3.0, 4-Quadrant PWM
with RS232, CANopen or EtherCAT interface

MC 5010 S

Values at 22°C		MC 5010 S	
Power supply electronic	U_P	12 ... 50	V DC
Power supply motor	U_{mot}	0 ... 50	V DC
PWM switching frequency	f_{PWM}	100	kHz
Efficiency electronic	η	97	%
Max. continuous output current	I_{cont}	10	A
Max. peak output current [1]	I_{max}	30	A
Standby current for electronic (@ U_P=24V)	I_{el}	RS / CO: 0,06 ET: 0,07	A
Operating temperature range		-40 ... +85	°C
Housing material		aluminium, powder-coated	
Mass		RS / CO: 230 ET: 270	g

[1] S2 mode for max. 3s

Interfaces	MC 5010 S RS	MC 5010 S CO	MC 5010 S ET
Configuration from Motion Manager 6.0	RS232 / USB	CANopen / USB	RS232 / USB
Fieldbus	RS232	CANopen	EtherCAT

Basic features

- Control of brushless, DC- and linear motors
- Supported sensor systems: absolute encoders (AES or SSI), incremental encoders (optical or magnetic), Hall sensors (digital or analog), tachometers
- Positioning resolution when using analog Hall sensors as position encoder: 4096 increments per revolution
- 3 digital inputs, 2 digital outputs, 2 analog inputs, flexible configuration
- Setpoint specification via fieldbus, quadrature signal, pulse and direction or analog inputs
- Optional stand-alone operation via application programs in all interface versions

Range of functions

Operating modes	PP, PV, PT, CSP, CSV, CST and homing acc. to IEC 61800-7-201 or IEC 61800-7-301 as well as position-, speed- and torque control via analog setpoint or voltage controller
Speed range for brushless motors with number of pole pairs 1	0 min^{-1} ... 30 000 min^{-1} with sinusoidal commutation
Application programs	Max. 8 application programs (BASIC), one of which is an autostart function
Additional functions	Touch-probe input, connection of a second incremental encoder, control of a holding brake
Indicator	LEDs for displaying the operating state Trace as recorder (scope function) or logger
Motor types	DC, BL- and linear motors

© DR. FRITZ FAULHABER GMBH & CO. KG
Specifications subject to change without notice.
www.faulhaber.com

Dimensional drawing

Scale reduced

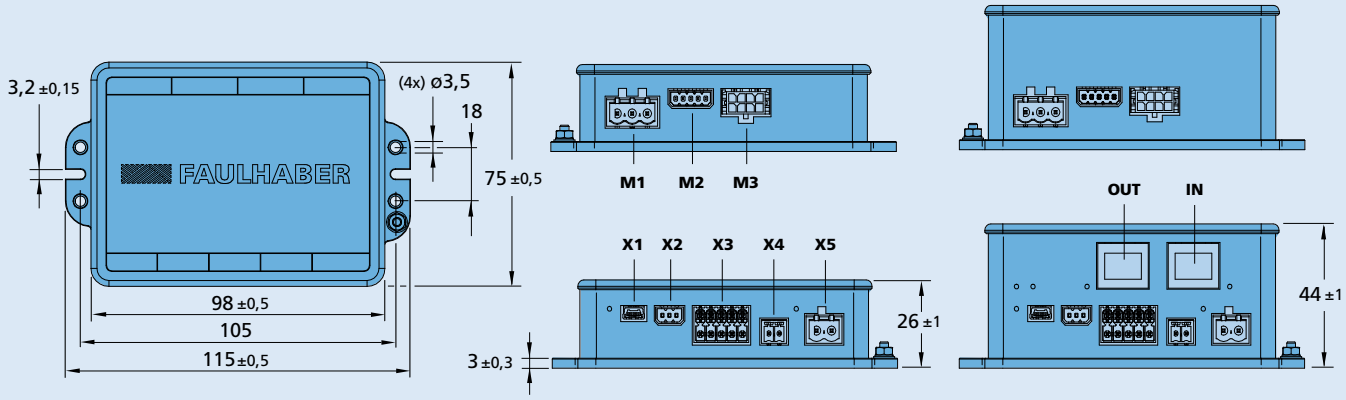

MC 5010 S **MC 5010 S RS/CO** **MC 5010 S ET**

Options and connection information

Example product designation: **MC 5010 S RS**

Option	Type	Description
6419	Encoder combination	Integrated terminating resistor for combination with absolute encoder AES-4096 L or AEMT-12/16 L

Connection

Name	Function	Input/Output	Description
X1	Configuration interface		USB
X2	Fieldbus		RS: RS232 CO: CANOpen
X3	Input/Output	DigIn1, DigIn2, DigIn3 DigOut1, DigOut2 AnIn1, AnIn2 U_{out} / GND	TTL or PLC level max. 0,7A cont. current ± 10V against AGND 5V
X4	Electronic power supply		
X5	Motor power supply		
M1	Motor phases	A, B, C	
M2	Hall sensors	A, B, C U_{out} / GND	digital or analog 5V
M3	Encoder	A, $\overline{A}$, B, $\overline{B}$, I, $\overline{I}$ EN, $\overline{EN}$, CLOCK, $\overline{CLOCK}$, DATA, $\overline{DATA}$ U_{out} / GND	max. 5MHz AES or SSI 5V
IN	Fieldbus		EtherCAT IN
OUT	Fieldbus		EtherCAT OUT

Note: For details on the connection assignment, see device manual for the MC 5010.

Product combination

DC-Motors

3242 ... CR
3257 ... CR
3272 ... CR
3863 ... CR
3890 ... CR

Brushless DC-Motors

2264 ... BP4
3242 ... BX4
3268 ... BX4
3274 ... BP4
3564 ... B
4490 ... B
4490 ... BS

Cables / Accessories

An extensive range of accessories is available for the products of the MC 5010 and MC 5005 controller series.

Included here are connection cables for controller and motor supply, sensors and interfaces, connector sets for motor- and supply side as well as mechanical components for optional top hat rail mounting.

To view our large range of accessory parts, please refer to the „Accessories“ chapter.

© DR. FRITZ FAULHABER GMBH & CO. KG
Specifications subject to change without notice.

Motion Controller

1-Axis controller with microstepping,
USB interface and GPIO

For combination with:
Stepper motors

Series MCST 3601

		MCST 3601	
Power supply	U_B	9 ... 36	V DC
Clock frequency	f_{clk}	16 000	kHz
Max. continuous output current range [1]	I_{cont}	0 ... 1,1	A
Max. peak output current	I_{max}	1,6	A
Max. current resolution		5	mA
Microstepping		up to 256 [2]	
Scanning rate (in full step mode)	N	30	µs
Inputs:			
– Digital, 24 VDC		3	
– Analog, 10 VDC		1	
Outputs:			
– Open drain, 24 VDC		6	
– +5 VDC, 100 mA		1	
Operating temperature range		– 30 ... + 70	°C
Mass		22	g

[1] at 22°C ambient temperature
[2] µstep/full step

Connection information			
Connections 1-6 :		digital input	
REF_L / DIR_IN	left stop switch input	programmable pull-up to +5V or direction input in S/D[4] operation mode	
REF_R / EN_IN	right stop switch input	programmable pull-up to +5V or enable input in S/D[4] operation mode	
HOME / STEP_IN	home switch input	programmable pull-up to +5V or step input in S/D[4] operation mode	
ENC_A / IN1	incremental encoder	channel A input or digital input 1	
ENC_B / IN2	incremental encoder	channel B input or digital input 2	
ENC_I / IN3	incremental encoder	index / null channel I input or digital input 3	
Connection 7 :		+5V output	
Current range		0 ... 100	mA
Connection 8, 13[2], 24 :		GND	
Signal ground			
Connection 9-12 :		motor A+, A-, B+, B-	
Output voltage		= U_B	VDC
Coil current range		0 ... 1,1	A
(depends on programmation and jumper settings)		0 ... 1,6 (Peak)	A
Connection 14[3] :		U_B	
Supply voltage range		9 ... 36	VDC
Connection 15-16 :		reserved	
Max speed rate transfer		1	Mbits/s
Max number of nodes		110	
Value of the termination resistors (2x)		120	Ohm
Connections 17-22 :		digital output	
Voltage range open drain outputs		= U_B	VDC
Current range open drain outputs		0 ... 100	mA
Connection 23 :		analog input	
Voltage range		0 ... 10	VDC

[3] Crossing the connections 13 and 14 may irreversibly damage the controller.
[4] S/D = step and direction (direct drive) mode.

© DR. FRITZ FAULHABER GMBH & CO. KG
Specifications subject to change without notice.
www.faulhaber.com

Features

The MCST3601 is a stepper motor controller that is mostly intended to be used as an evaluation board.
It has the capability to drive the full range of stepper motors thanks to a selected current range.

This range must be selected manually through jumpers and programmed with the TMCL-IDE software.

The USB communication makes it fully programmable and the many inputs and outputs enable an external interaction.

Full step or microstepping up to 256 can be managed by programming.

Moreover, the MCST3601 comprises screw terminals for quick setup and a Molex connector compatible with the standard cables solutions offered on stepper motors.

When controlling several axis, one driver per axis is required but there is a possibility to coordinate the different axis by using the MCST3601 as „Master" and up to two other boards as „Slaves". The slave boards are then adressed as step and direction drivers by the master board. MCST3601 can also be converted in one of those step and direction driver.

Finally, the MCST3601 has the capability to read and treat an external input signal that may be sent by a sensor or an encoder. This is very useful in the case where a homing function must be made before starting the movement, in other words, when the motor is looking for a reference position before starting.
Note that this function is not acting like a closed loop regulator.

Accessories

The MCST3601 is delivered with one USB cable and four spacer bolt.

Dimensional drawing and connection information MCST 3601

Scale reduced

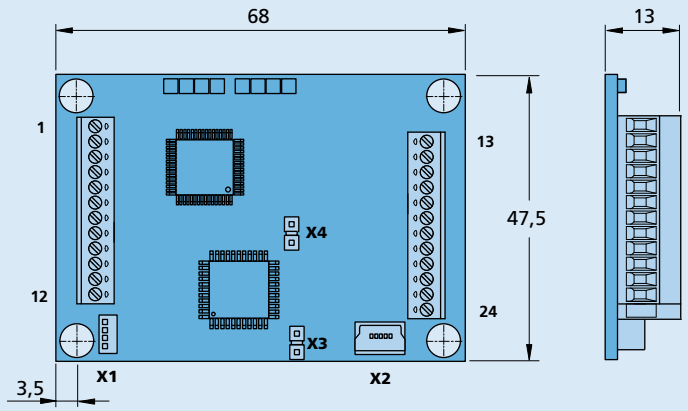

MCST 3601

Motor connection

No.	Function
1	REF_L / DIR_IN
2	REF_R / EN_IN
3	HOME / STEP_IN
4	ENC_A / IN1
5	ENC_B / IN2
6	ENC_I / IN3
7	+5VOUT / 100mA
8	GND
9	Motor A+
10	Motor A-
11	Motor B+
12	Motor B-

Supply connection

No.	Function
13	GND
14	UB
15	reserved
16	reserved
17	OUT0
18	OUT1
19	OUT2
20	OUT3
21	OUT4
22	OUT5
23	IN0
24	GND

X1 Motor connector

Connector housing:
Molex 51021-0400
Contacts: Molex 50079-8000
Wire: AWG 26-28

X2 USB 2.0 (12Mbit/s)

Any standard mini-USB plug compatible with Molex 500075-1517

X3, X4 Jumpers for current settings

© DR. FRITZ FAULHABER GMBH & CO. KG
Specifications subject to change without notice.
www.faulhaber.com

Accessories

Adapter

6501.0009x	Programming Adapter SC/SCS, USB
6501.00088	Programming Adapter SC/SCS, USB/RS232
6501.00065	Programming Adapter MCS, RS232/CAN
6501.00113	Programming Adapter MCS, RS232/CAN
6501.00121	Programming Adapter MC, RS232/CAN
6501.00135	Programming Adapter CSD MCS, Mini USB
6501.00136	Programming Adapter MC, Mini USB
6501.00159	Programming Adapter CS MCS, Mini USB
6501.00283	Programming Adapter MCS, RS232/CAN
6501.00284	Programming Adapter MCS, USB
6501.00368	Battery adapter, multi-turn encoder AEMT-12/16 L
6501.00391	Programming Adapter IMC, RS/CO
6501.00392	Programming Adapter IMC, USB
6501.00063	Encoder Adapter MC » IE2/IEH2
6501.00064	Encoder Adapter MC » IE3L/IER3L/IERS3L/HEDL
6501.00084	Encoder Adapter MC » IE2/IEH2
6501.00143	Encoder Adapter MC » IE2/IEH2
6501.00144	Encoder Adapter MC » PA2
6501.00145	Encoder Adapter MC » HXM3
6501.00193	Encoder Adapter MC » IE3/IEH3/IER3/IERS3
6501.00194	Encoder Adapter MC » IE3/IEH3/IER3/IERS3
6501.00385	Encoder Adapter SC » IEP3

6501.00083	Motor Adapter SC » 0620...B
6501.00116	Motor Adapter SC » 0824...B/1028...B IEM3
6501.00163	Motor Adapter SC » 0824...B/1028...B IEM3
6501.00324	Motor Adapter SC » 1660...BHx
6501.00085	Motor Adapter MC » BX4 (Hall Sensors/AES)
6501.00086	Motor Adapter MC/SC » BX4 (Hall Sensors/AES)
6501.00117	Motor Adapter MC » LM0830-01
6501.00171	Motor Adapter MC » LM1247 / LM1483
6501.00182	Motor Adapter MC » LM1247/ LM1483 / LM2070
6501.00321	Motor Adapter MC » 0620 ... B
6501.00112	Connection Adapter SCS » USB
6501.00128	Connection Adapter PC-MC » USB-CAN
6501.00170	Connection Adapter PC-MC » USB-RS232
6501.00323	Adapter Set MC50xx » Encoder
Cables Cables and other Accessories	

Accessory Combination

EFC 5008	Electronic filters
EFM 5001/5003/5008	Electronic filters
EFS 5004/3004	Electronic filters
MBZ	Magnetic Brakes
PMB32	Magnetic Brakes
BC5004	Braking Chopper

Backwards

Accessories

Programming Adapter SC/SCS for Speed Controller and Speed Control Systems, USB interface

Part No.: 6501.0009x

		6501.00096 and 6501.00097	
Power supply for electronics	U_{elo}	5 ... 30	V
Power supply for motor	U_{mot}	0 ... 30	V
Current consumption of electronics	I_{el}	20	mA
Temperature range:			
– Operating temperature		0 ... + 65	°C
Dimensions and weight:			
– Dimensions (L x B x H)		55 x 48 x 18	mm
– Mass		35	g

General information

Standard programming adapter for configuration and changes of the operating modes for Speed Controller series SC 1801 S / F, SC 2804 S and SC 5008 S.

Automatic parameter download in connection with FAULHABER Motion Manager (from version 4.2) via USB interface.

Immediate test operation after successful data transfer within the customers application is feasible.

The programming adapter is to be operated via an USB interface. Therefore the installation of a special USB driver is required.

Driver installation

The driver is included in the setup package of FAULHABER Motion Manager (from version 4.2), which can be downloaded from the FAULHABER internet site www.faulhaber.com/MotionManager.

For detailed informations to install the driver please see instruction manual of SC programming adapter USB.

Connection diagram

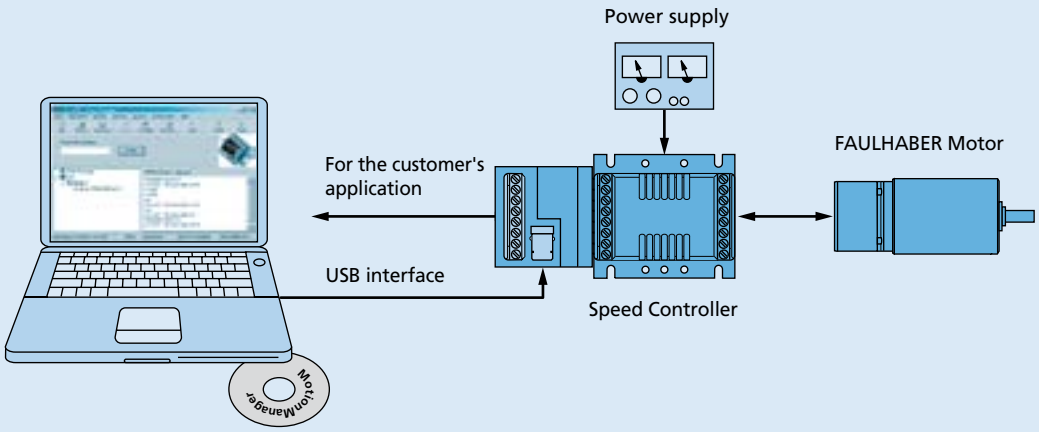

Dimensional drawing and connection information

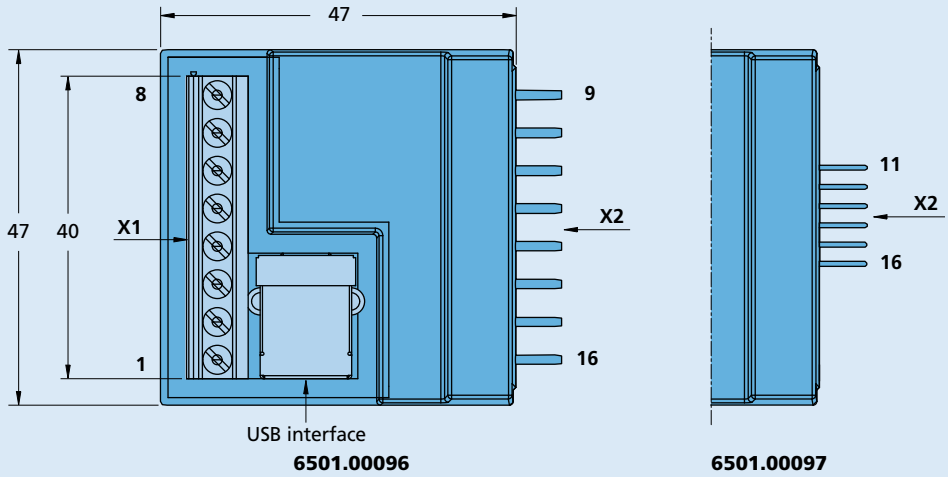

Pin assignment

Pin	Connection X1
1	Up
2	Umot
3	GND
4	Unsoll
5	DIR
6	FG
7	IO2
8	IO1

Pin	Connection X2
9	IO1
10	IO2
11	FG
12	DIR
13	Unsoll
14	GND
15	Umot
16	Up

© DR. FRITZ FAULHABER GMBH & CO. KG
Specifications subject to change without notice.
www.faulhaber.com

Accessories

Programming Adapter SC/SCS for Speed Controller and Speed Control Systems, USB/RS232 interface

Part No.: 6501.00088

		6501.00088	
Power supply for electronics	U_{elo}	3,5 ... 30	V
Power supply for motor	U_{mot}	0 ... 30	V
Current consumption of electronics	I_{el}	0,1	A
Temperature range:			
– Operating temperature		0 … + 65	°C
Dimensions and weight:			
– Dimensions (L x B x H)		80 x 65 x 31	mm
– Mass		45	g

General information

Description of connectors / controls:

X1 Terminals for power supplies
- Pin 1: GND Ground connection of power supply/supplies
- Pin 2: U_{elo} Power supply for electronics
- Pin 3: U_{mot} Power supply for motor winding

X2, X3, X6, X10 Terminals for motor / motor controller
- Pin 1: U_P Power supply for motor electronics
- Pin 2: U_{mot} Power supply for motor winding
- Pin 3: GND Power supply negative pole
- Pin 4: U_{nsoll} Output for nominal speed setting 0...10V
- Pin 5: DIR Output for direction of rotation setting
- Pin 6: FG Input for speed signal from motor controller

X5 RS232 connector, may optionally be used instead of X9 in PROG mode for programming

X9 USB connector, may optionally be used instead of X5 in PROG mode for programming

JP1 Jumper can be removed and connected to an amperemeter for motor current measurement at U_{mot}.

JP3 Jumper to separate power supply for electronics and motor
- 1-2: $U_P = U_{mot}$ » Joint power supply to electronics and motor winding via terminal Umot
- 2-3: $U_P = U_{elo}$ » Power supply to electronics via separate terminal U_{elo} (separate power supply for electronics and motor winding). Power supply for programming adapter also via the terminal selected for U_P

JP9 Connector for external signal for Unsoll, e.g. PWM signal for speed setting. Note: JP10 must then be removed.

JP10 Jumper for selection of the source for U_{nsoll}. Closed: U_{nsoll} adjustable with P1.

S1 Switch for setting the operating mode
PROG mode = software update
MOT mode = motor operation

S2 Switch for setting the direction of rotation of the motor

S3 Switch for switching the power supply U_P for the electronics on/off

P1 P1 is used to set U_{nsoll} from 0...10V. JP10 must be closed. The power supply U_P must be at least 10,5V.

LED 1 Indicates the programming adapter is ready for operation

LED 2 Indicates the external controller status.
ON = ready for operation, OFF = error

Start-up

- Connect operating voltage to X1. Use alternatively joint or separate operating voltage for electronics and motor.
  Note: Pay attention to correct setting of JP3.
  Pay attention to minimum/maximum values for U_{mot} and U_{elo}.
- S3 in position OFF; JP1 and JP10 closed.
- Connect motor/motor controller to X2, X3, X6 or X10.
- For PROG mode, connect to a Windows PC at X5 (null modem cable) or X9 (USB connection cable type B).
- LED 1 and LED 2 lights up after power-on for U_{mot} or U_{mot} and U_{elo}.

Driver installation:

If the programming adapter is to be operated via the USB connector X9, a special USB driver must be installed if using Windows XP (further details on request).

Dimensional drawing and connection information

scale reduced

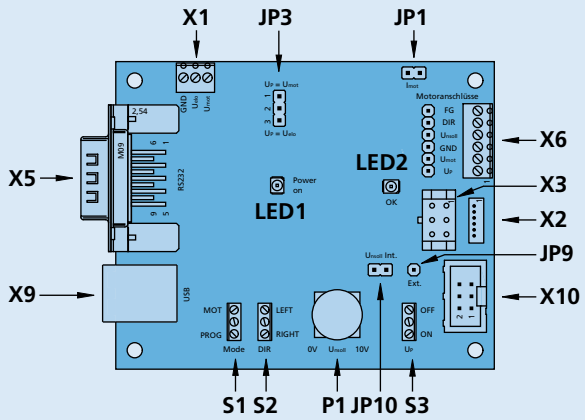

6501.00088

Connection

No.	Function
LED 1	Ready for operation
LED 2	Status external controller
Terminals	
X1	Power supply
X2, X3, X6, X10	Connector for motor or SC controller
X5	RS232 connector
X9	USB connector, type B
Jumpers	
JP1	Motor current measurement
JP3	Separation of U_P from U_{mot}
JP9	U_{nsoll} external input signal
JP10	U_{nsoll} int. setting with P1
Switches	
S1	Operating mode
S2	Direction of motor rotation
S3	Power switch on/off
Potentiometer	
P1	U_{nsoll} setting

PROG mode

Settings	
S1	PROG
S2	RIGHT
S3	OFF
P1	0V
JP1	Closed
JP10	Closed

MOT mode

Settings	
S1	MOT
S2	RIGHT or LEFT
S3	OFF - ON
P1	0V ... 10V
JP1	Opt. current measurement
JP10	Select source for U_{nsoll}

© DR. FRITZ FAULHABER GMBH & CO. KG
Specifications subject to change without notice.
www.faulhaber.com

Accessories

Programming Adapter Cx for Motion Control Systems V2.5
RS232/CAN interface

Part No.: 6501.00065

	6501.00065	
Temperature range:		
– Operating temperature	– 10 … + 65	°C
Dimension and Weight:		
– Dimension (L x B x H)	64 x 44,5 x 13,8	mm
– Mass	29,5	g

Note: The board has installation feet for 35 mm mounting rails.
All switches are in the "OFF" position in the as-delivered condition. These switches must be set accordingly depending on the application.

General information

The programming adapter is used to connect Brushless DC-Servomotors with integrated Motion Controller and a serial RS232 or CAN interface.

The different operating modes can be selected using the 6 DIP switches.
A Brushless DC-Servomotor with integrated Motion Controller can be connected to each programming adapter.

Description of DIP switch (S1) settings

1: Fault	ON	Pull-up resistor with LED connected to programming adapter.
	OFF	Open collector
2: Term	ON	120 Ω terminating resistor for the final node in the CAN network connected to the programming adapter.
	OFF	Terminating resistor not connected
3: CAN [1]	ON	Operation with CAN interface
	OFF	Deactivated
4: RS232 [1]	ON	Operation with RS232 interface
	OFF	Deactivated
5: NETMODE	ON	Pull-down resistor (10 kΩ) for RS232 wiring connected. This may only be connected to a node in the RS232 network.
	OFF	Deactivated
6: AGND	ON	AGND and GND interconnected.
	OFF	AGND and GND disconnected (with separate ground).

Pin assignment

Pin	Connection X1
1	3. In
2	GND
3	+24V
4	An In
5	Fault
6	AGND

Pin	Connection X2	Wires
1	RS-232 TxD	green
2	RS-232 RxD	yellow
3	AGND	grey
4	Fault	white
5	An In	brown
6	+24V	pink
7	GND	blue
8	3. In	red

at RS232 operation [1]

Pin	Connection X3
2	RS-232 / RxD
3	RS-232 / TxD
5	GND

at CAN operation [1]

Pin	Connection X3
2	CAN_L
3	GND
7	CAN_H

LED	Status	
■	LED illuminates	no error fault output switched to GND
□	LED does not illuminate	error fault output high-impedance

[1] The pin assignments of X3 depend on the position of switches 3 and 4 of DIP switch S1.

Dimensional drawing and connection information

Scale reduced

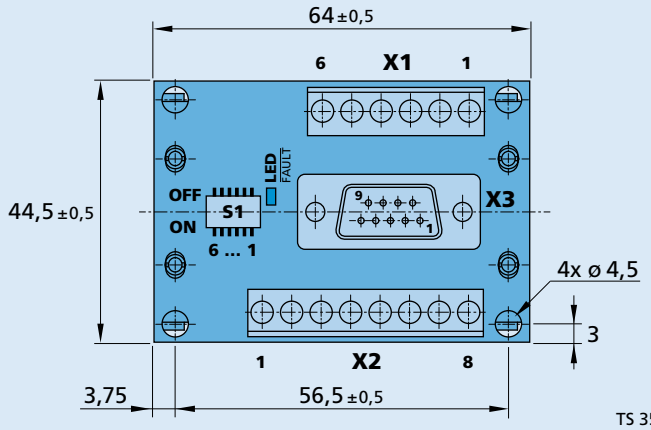

6501.00065

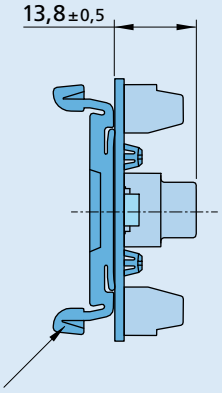

TS 35 Typ Wago 209-188
for top hat rail mounting

Connection

No.	Function
X1	Supply connector; I/O
X2	Motor connector
X3	RS-232 / CAN

No.	Switch
S1	DIP-switch (6 switches)

© DR. FRITZ FAULHABER GMBH & CO. KG
Specifications subject to change without notice.
www.faulhaber.com

Accessories

Programming Adapter CxD for Motion Control Systems V2.5
RS232/CAN interface

Part No.: 6501.00113

	6501.00113	
Temperature range:		
– Operating temperature	– 10 … + 65	°C
Dimension and Weight:		
– Dimension (L x B x H)	60 x 50 x 15	mm
– Mass	30	g

Note: All switches are in the "OFF" position in the as-delivered condition. These switches must be set accordingly depending on the application.

General information

The programming adapter is used to connect Brushless DC-Servomotors with integrated Motion Controller and a serial RS232 or CAN interface.

The different operating modes can be selected using the 6 DIP switches.
A Brushless DC-Servomotor with integrated Motion Controller can be connected to each programming adapter.

Description of DIP switch (S1) settings

1: Fault	ON	Pull-up resistor with LED connected to programming adapter.
	OFF	Open collector
2: Term	ON	120 Ω terminating resistor for the final node in the CAN network connected to the programming adapter.
	OFF	Terminating resistor not connected
3: CAN [1]	ON	Operation with CAN interface
	OFF	Deactivated
4: RS232 [1]	ON	Operation with RS232 interface
	OFF	Deactivated
5: NETMODE	ON	Pull-down resistor (2,2 kΩ) for RS232 wiring connected. This may only be connected to a node in the RS232 network.
	OFF	Deactivated
6: AGND	ON	AGND and GND interconnected.
	OFF	AGND and GND disconnected (with separate ground).

[1] The pin assignments of X3 depend on the position of switches 3 and 4 of DIP switch S1.

Pin assignment

Pin	Connection X1
1	3. In
2	+24V
3	GND
4	An In
5	AGND
6	Fault
7	RS-232 RxD / CAN-L
8	RS-232 TxD / CAN-H

Pin	Connection X2
1	3. In
2	+24V
3	GND
4	An In
5	AGND
6	Fault
7	RS-232 RxD / CAN-L
8	RS-232 TxD / CAN-H
9	n.c.
10	n.c.

at RS232 operation [1]

Pin	Connection X3
2	RS-232 / RxD
3	RS-232 / TxD
5	GND

at CAN operation [1]

Pin	Connection X3
2	CAN_L
3	GND
7	CAN_H

Pin	Connection X4
1	+24V
2	GND
3	An In
4	AGND
5	Fault
6	3. In

LED	Status
■	LED illuminates no error fault output switched to GND
□	LED does not illuminate error fault output high-impedance

Dimensional drawing and connection information

Scale reduced

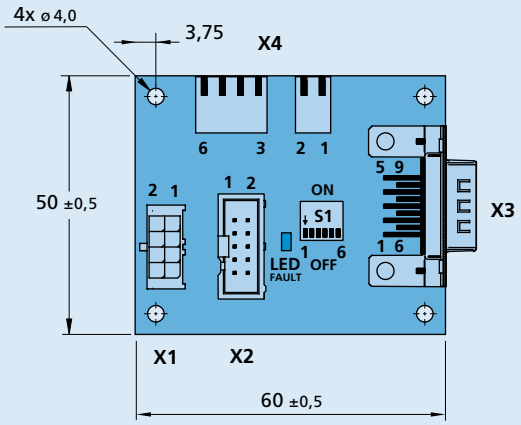

6501.00113

Connection

No.	Function
X1, X2	Motor connector
X3	RS232 / CAN
X4	Supply connector; I/O

No.	Switch
S1	DIP-switch (6 switches)

© DR. FRITZ FAULHABER GMBH & CO. KG
Specifications subject to change without notice.
www.faulhaber.com

Accessories

Programming Adapter MC for Motion Controller V2.5
RS232/CAN interface

Part No.: 6501.00121

	6501.00121	
Temperature range:		
– Operating temperature	– 10 … + 65	°C
Dimension and Weight:		
– Dimension (L x B x H)	47,5 x 31,5 x 15	mm
– Mass	21	g

Note: All switches are in the "OFF" position in the as-delivered condition. These switches must be set accordingly depending on the application.

General information

The programming adapter is used to connect and for the parameter set-up of Motion Controller series MCxx 3002 S / F with serial RS232 or CAN interface.

The different operating modes can be selected using the 6 DIP switches.
A Motion Controller can be connected to each programming adapter.

Description of DIP switch (S1) settings

1: Fault	ON	Pull-up resistor with LED connected to programming adapter.
	OFF	Open collector
2: Term	ON	120 Ω terminating resistor for the final node in the CAN network connected to the programming adapter.
	OFF	Terminating resistor not connected
3: CAN [1]	ON	Operation with CAN interface
	OFF	Deactivated
4: RS232 [1]	ON	Operation with RS232 interface
	OFF	Deactivated
5: NETMODE	ON	Pull-down resistor (2,2 kΩ) for RS232 wiring connected. This may only be connected to a node in the RS232 network.
	OFF	Deactivated
6: AGND	ON	AGND and GND interconnected.
	OFF	AGND and GND disconnected (with separate ground).

Pin assignment

at RS232 operation [1]

Pin	Connection X1
2	RS-232 / RxD
3	RS-232 / TxD
5	GND

at CAN operation [1]

Pin	Connection X1
2	CAN_L
3	GND
7	CAN_H

Pin	Connection X2 / X3
1	+24V
2	GND
3	An In
4	AGND
5	Fault
6	3. In

Pin	Connection X4
1	RS232 TxD / CAN-H
2	RS232 RxD / CAN-L
3	AGND
4	Fault
5	AnIn
6	U_b
7	GND
8	3. In

LED	Status	
	LED illuminates	no error fault output switched to GND
	LED does not illuminate	error fault output high-impedance

[1] The pin assignments of X1 depend on the position of switches 3 and 4 of DIP switch S1.

Dimensional drawing and connection information

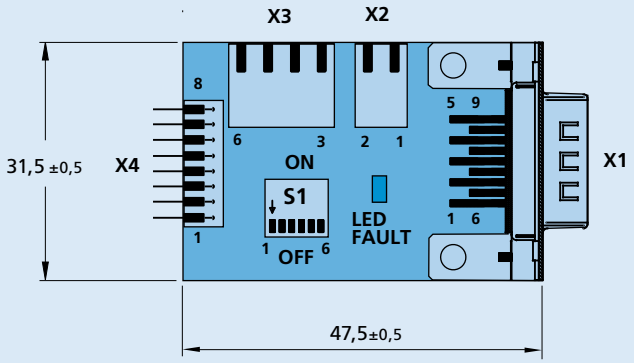

6501.00121

Connection

No.	Function
X1,	RS232 / CAN
X2 / X3	Supply connector; I/O
X4	Controller connector

No.	Switch
S1	DIP-switch (6 switches)

© DR. FRITZ FAULHABER GMBH & CO. KG
Specifications subject to change without notice.
www.faulhaber.com

Accessories

Programming Adapter CSD for Motion Control Systems V2.5
Mini USB interface

Part No.: 6501.00135

	6501.00135	
Temperature range:		
– Operating temperature	– 10 … + 65	°C
Dimension and Weight:		
– Dimension (L x B x H)	60 x 50 x 15	mm
– Mass	30	g

Note: All switches are in the "OFF" position in the as-delivered condition. These switches must be set accordingly depending on the application.

General information

The programming adapter is used to connect Brushless DC-Servomotors with integrated Motion Controller and a USB interface.

The different operating modes can be selected using the 6 DIP switches.
A Brushless DC-Servomotor with integrated Motion Controller can be connected to each programming adapter.

Driver installation

The driver is included in the setup package of FAULHABER Motion Manager (from version 5.2), which can be downloaded from the FAULHABER internet site www.faulhaber.com/MotionManager.

For detailed informations to install the driver please see instruction manual of programming adapter USB.

Description of DIP switch (S1) settings

1: Fault	ON	Pull-up resistor with LED connected to programming adapter.
	OFF	Open collector
2: N.C.		
3: N.C.		
4: USB	ON	Operation with USB
	OFF	Deactivated
5: N.C.		
6: AGND	ON	AGND and GND interconnected.
	OFF	AGND and GND disconnected (with separate ground).

Pin assignment

Pin	Connection X1
1	3. In
2	+24V
3	GND
4	An In
5	AGND
6	Fault
7	RS-232 RxD
8	RS-232 TxD

Pin	Connection X2
1	3. In
2	+24V
3	GND
4	An In
5	AGND
6	Fault
7	RS-232 RxD
8	RS-232 TxD
9	n.c.
10	n.c.

Connection X3
USB

Pin	Connection X4/X5
1	+24V
2	GND
3	An In
4	AGND
5	Fault
6	3. In

LED	Status
	LED illuminates no error fault output switched to GND
	LED does not illuminate error fault output high-impedance

Dimensional drawing and connection information

Scale reduced

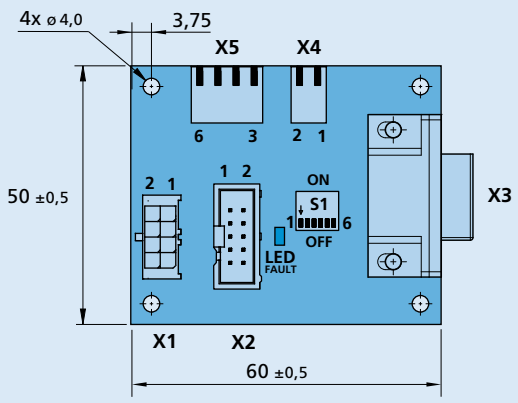

6501.00135

Connection

No.	Function
X1, X2	Motor connector
X3	USB
X4, X5	Supply connector; I/O

No.	Switch
S1	DIP-switch (6 switches)

© DR. FRITZ FAULHABER GMBH & CO. KG
Specifications subject to change without notice.
www.faulhaber.com

Accessories

Programming Adapter MC for Motion Controller V2.5
Mini USB interface

Part No.: 6501.00136

	6501.00136	
Temperature range:		
– Operating temperature	– 10 … + 65	°C
Dimension and Weight:		
– Dimension (L x B x H)	47,5 x 31,5 x 15	mm
– Mass	21	g

Note: All switches are in the "OFF" position in the as-delivered condition. These switches must be set accordingly depending on the application.

General information

The programming adapter is used to connect and for the parameter set-up of Motion Controller series MCxx 3002 S / F.
One Motion Controller can be connected to each adapter board.

The programming adapter is to be operated via an USB interface. Therefore the installation of a special USB driver is required.

Driver installation

The driver is included in the setup package of FAULHABER Motion Manager (from version 5.2), which can be downloaded from the FAULHABER internet site www.faulhaber.com/MotionManager.

For detailed informations to install the driver please see instruction manual of programming adapter USB.

Description of DIP switch (S1) settings

1: Fault	ON	Pull-up resistor with LED connected to programming adapter.
	OFF	Open collector
2: Term	OFF	Reserved – must not be activated
3: CAN	OFF	Reserved – must not be activated
4: USB	ON	Operation with USB interface
	OFF	Deactivated
5: NETMODE	OFF	Reserved – must not be activated
6: AGND	ON	AGND and GND interconnected.
	OFF	AGND and GND disconnected (with separate ground).

Pin assignment

Connection X1
USB

Pin	Connection X2 / X3
1	+24V
2	GND
3	An In
4	AGND
5	Fault
6	3. In

Pin	Connection X4
1	RS232 TxD
2	RS232 RxD
3	AGND
4	Fault
5	AnIn
6	U_b
7	GND
8	3. In

LED	Status	
■	LED illuminates	no error fault output switched to GND
□	LED does not illuminate	error fault output high-impedance

Dimensional drawing and connection information

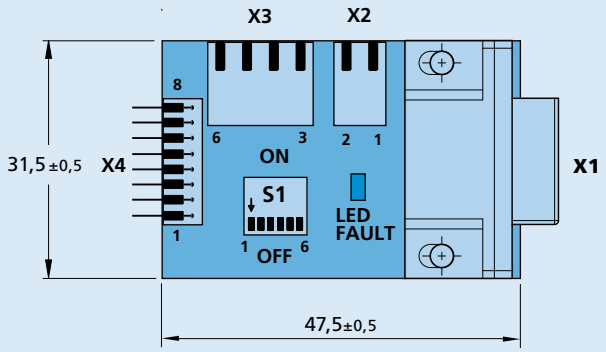

6501.00136

Connection

No.	Function
X1,	USB
X2 / X3	Supply connector; I/O
X4	Controller connector

No.	Switch
S1	DIP-switch (6 switches)

© DR. FRITZ FAULHABER GMBH & CO. KG
Specifications subject to change without notice.
www.faulhaber.com

Accessories

Programming Adapter CS for Motion Control Systems V2.5
Mini USB interface

Part No.: 6501.00159

	6501.00159	
Temperature range:		
– Operating temperature	– 10 … + 65	°C
Dimension and Weight:		
– Dimension (L x B x H)	64 x 48 x 23,6	mm
– Mass	29,5	g

Note: The board has installation feet for 35 mm mounting rails.
All switches are in the "OFF" position in the as-delivered condition. These switches must be set accordingly depending on the application.

General information

The programming adapter is used to connect Brushless DC-Servomotors with integrated Motion Controller. One Brushless DC-Servomotor with integrated Motion Controller can be connected to each programming adapter.

The programming adapter is to be operated via an USB interface. Therefore the installation of a special USB driver is required.

Driver installation

The driver is included in the setup package of FAULHABER Motion Manager (from version 5.2), which can be downloaded from the FAULHABER internet site www.faulhaber.com/MotionManager.

For detailed informations to install the driver please see instruction manual of programming adapter USB.

Description of DIP switch (S1) settings

1: Fault	ON	Pull-up resistor with LED connected to programming adapter.
	OFF	Open collector
2: N.C.		
3: N.C.		
4: USB	ON	Operation with USB interface
	OFF	Deactivated
5: N.C.		
6: AGND	ON	AGND and GND interconnected.
	OFF	AGND and GND disconnected (with separate ground).

Connection

Pin	Connection X1
1	3. In
2	GND
3	+24V
4	An In
5	Fault
6	AGND

Pin	Connection X2	Wires
1	RS-232 TxD	green
2	RS-232 RxD	yellow
3	AGND	grey
4	Fault	white
5	An In	brown
6	+24V	pink
7	GND	blue
8	3. In	red

Connection X3
USB

LED	Status	
	LED illuminates	no error fault output switched to GND
	LED does not illuminate	error fault output high-impedance

Dimensional drawing and connection information

Scale reduced

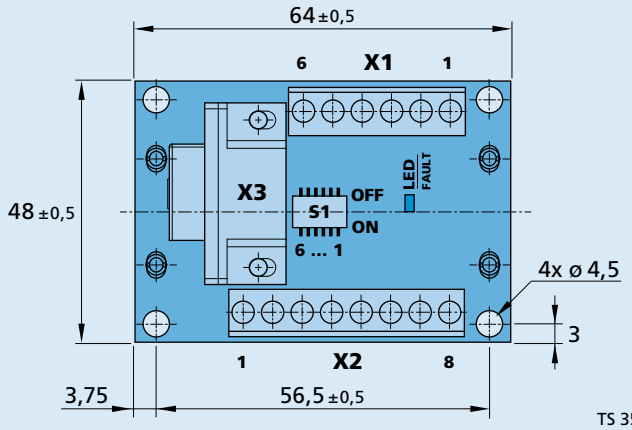

6501.00159

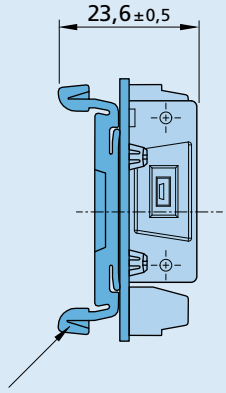

TS 35 Typ Wago 209-188
for top hat rail mounting

Connection

No.	Function
X1	Supply connector; I/O
X2	Motor connector
X3	USB

No.	Switch
S1	DIP-switch (6 switches)

© DR. FRITZ FAULHABER GMBH & CO. KG
Specifications subject to change without notice.
www.faulhaber.com

Accessories

Programming Adapter MCS for Motion Control Systems V3.0
RS232/CAN interface

Part No.: 6501.00283

	6501.00283	
Temperature range:		
– Operating temperature	– 10 … + 65	°C
Dimension and Weight:		
– Dimension (L x B x H)	80 x 52 x 27,5	mm
– Mass	56	g

Note: All switches are in the "ON" position in the as-delivered condition. These switches must be set accordingly depending on the application.

General information

The programming adapter is used to connect and for the parameter set-up of Motion Controller series MCS with serial RS232 or CAN interface.

The different operating modes can be selected using the 7 DIP switches.
A Motion Control System can be connected to each programming adapter.

Description of DIP switch (S1) settings

1: NETMODE	ON	Pull-down resistor (10 kΩ) for RS232 wiring connected. This may only be connected to a node in the RS232 network.
	OFF	Deactivated
2: TERM	ON	120Ω terminating resistor for the final node in the CAN network connected to the programming adapter.
	OFF	Terminating resistor not connected
3: RS232 [1]	ON	Operation with RS232 interface
	OFF	Deactivated
4: CAN [1]	ON	Operation with CAN interface
	OFF	Deactivated
5: AGND	ON	AGND and GND interconnected.
	OFF	AGND and GND disconnected (with separate ground).
6: DigOut2	ON	Pull-up resistor with LED connected to programming adapter.
	OFF	Open collector
7: DigOut1	ON	Pull-up resistor with LED connected to programming adapter.
	OFF	Open collector

[1] The pin assignments of X1 depend on the position of switches 3 and 4 of DIP switch S1.
[2] Jumper connected: common power supply for motor and electronics.

Pin assignment

at RS232 operation [1]

Pin	Connection X1
2	RS-232 / RxD
3	RS-232 / TxD
5	GND

Pin	Connection X3 [2]
1	U_{mot}
2	U_p

Pin	Connection X5
1	GND
2	U_p
3	U_{mot}
4	EGND

Pin	Connection X7
1	GND
2	RxD / CAN_L
3	TxD / CAN_H
4	+5V
5	DigOut1
6	DigOut2
7	DigIn1
8	DigIn2
9	DigIn3
10	AnIn1
11	AGND
12	AnIn2

at CAN operation [1]

Pin	Connection X1
2	CAN_L
3	GND
7	CAN_H

Pin	Connection X4
1	GND
2	U_p

Pin	Connection X6
1	GND
2	U_{mot}

Pin	Connection X8
1	GND
2	+5V
3	DigOut1
4	DigOut2
5	DigIn1
6	DigIn2
7	DigIn3
8	AnIn1
9	AGND
10	AnIn2

Dimensional drawing and connection information

Scale reduced

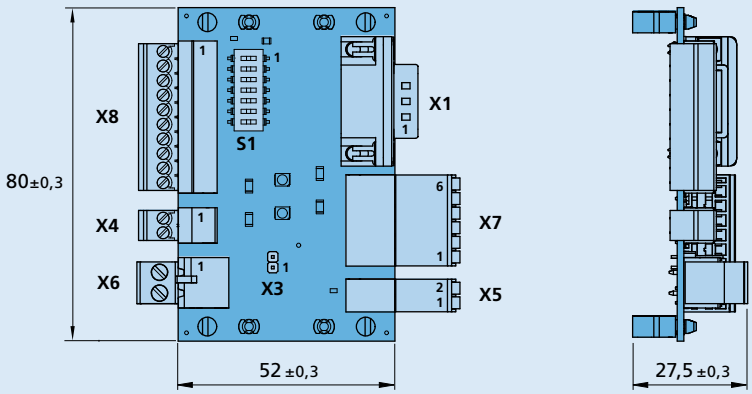

6501.00283

Connection

No.	Function
X1	RS232 / CAN
X3	Jumper voltage supply
X4	Voltage supply electronics
X5	Voltage supply MCS
X6	Voltage supply motor
X7	I/O MCS
X8	I/O application

No.	Switch
S1	DIP-switch (7 switches)

© DR. FRITZ FAULHABER GMBH & CO. KG
Specifications subject to change without notice.
www.faulhaber.com

Accessories

Programming Adapter MCS for Motion Control Systems V3.0
USB interface

Part No.: 6501.00284

	6501.00284	
Temperature range:		
– Operating temperature	– 10 … + 65	°C
Dimension and Weight:		
– Dimension (L x B x H)	80 x 52 x 27,5	mm
– Mass	56	g

Note: All switches are in the "ON" position in the as-delivered condition. These switches must be set accordingly depending on the application.

General information

The programming adapter is used to connect and for the parameter set-up of Motion Control Systems series MCS.

The programming adapter is to be operated via an USB interface. Therefore the installation of a special USB driver is required.

Driver installation

The driver is included in the setup package of FAULHABER Motion Manager (from version 6), which can be downloaded from the FAULHABER internet site www.faulhaber.com/MotionManager.

The driver files are included in the installation register of the FAULHABER Motion Manager.

Description of DIP switch (S1) settings

1: N.C.	OFF	
2: N.C.	OFF	
3: USB	ON	Operation with USB interface
	OFF	Deactivated
4: N.C.	OFF	
5: AGND	ON	AGND and GND interconnected.
	OFF	AGND and GND disconnected (with separate ground).
6: DigOut2	ON	Pull-up resistor with LED connected to programming adapter.
	OFF	Open collector
6: DigOut2	ON	Pull-up resistor with LED connected to programming adapter.
	OFF	Open collector

[1] Jumper connected: common power supply for motor and electronics.

Pin assignment

Connection X1
USB

Pin	Connection X3 [1]
1	U_{mot}
2	U_p

Pin	Connection X4
1	GND
2	U_p

Pin	Connection X5
1	GND
2	U_p
3	U_{mot}
4	EGND

Pin	Connection X6
1	GND
2	U_{mot}

Pin	Connection X7
1	GND
2	RxD
3	TxD
4	+5V
5	DigOut1
6	DigOut2
7	DigIn1
8	DigIn2
9	DigIn3
10	AnIn1
11	AGND
12	AnIn2

Pin	Connection X8
1	GND
2	+5V
3	DigOut1
4	DigOut2
5	DigIn1
6	DigIn2
7	DigIn3
8	AnIn1
9	AGND
10	AnIn2

Dimensional drawing and connection information

Scale reduced

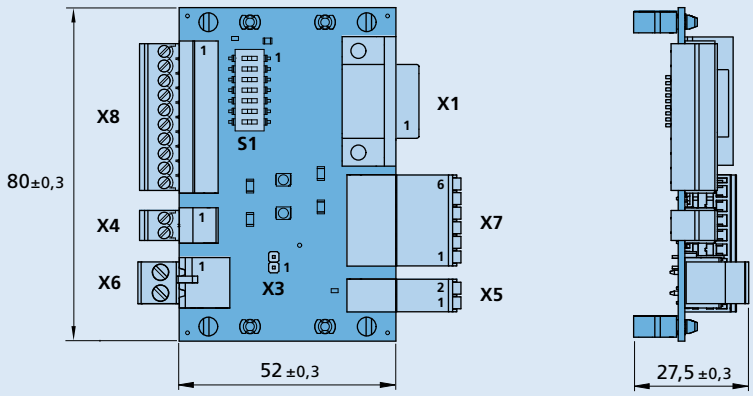

6501.00284

Connection

No.	Function
X1	USB
X3	Jumper voltage supply
X4	Voltage supply electronics
X5	Voltage supply MCS
X6	Voltage supply motor
X7	I/O MCS
X8	I/O application

No.	Switch
S1	DIP-switch (7 switches)

© DR. FRITZ FAULHABER GMBH & CO. KG
Specifications subject to change without notice.
www.faulhaber.com

Accessories

Battery adapter for multi-turn encoder AEMT-12/16 L

Part No.: 6501.00368

	6501.00368	
Temperature range:		
– Operating temperature	– 40 … + 85	°C
Dimension and Weight:		
– Dimension (L x B x H)	65 x 58 x 23,6	mm
– Mass	56	g

Note: All switches are in "OFF" position in the as-delivered condition. These switches must be set accordingly depending on the application.

General information

If the power supply fails or is switched off, the AEMT-12/16 L multi-turn encoder automatically switches to a battery mode with greatly reduced energy consumption.

In combination with a suitable backup battery, the battery adapter ensures that the multi-turn functionality of the encoder is temporarily maintained.

In addition to the buffer function, the adapter also contains a preset connection for resetting the revolution counter when commissioning or during maintenance work.

For details on the functionality, see the technical manual of the AEMT-12/16 L.

The adapter can be mounted on both a base plate as well as on a top-hat rail.

In addition to the adapter itself, two connection cables are available for the motor and controller side, which are not included in the delivery contents of the adapter.

6501.00369 combination with MC 50xx, L = 150 mm
6501.00370 combination with multi-turn encoder AEMT-12/16 L, L = 2000 mm

Description of the setting options via the DIP switch (S1)

1: Preset	ON	AEMT power supply switched on.
	OFF	AEMT power supply switched off.
2: GND	ON	AEMT preset input switched to U_{DD}.
	OFF	AEMT power supply switched to GND.

NOTE: The battery is not included in the delivery contents of the adapter. Recommended battery types: SL-350, ER 14259, LS 14250.

As an alternative to these battery types, a pre-assembled battery with connector can be connected to X4. Recommended type: LS 14250 MLB

Pin assignment

Pin	Connection X1
1	Preset
2	GND

Pin	Connection X2
1	N.C.
2	U_{DD}
3	GND
4	$\overline{CS}$
5	CS
6	$\overline{DATA}$
7	DATA
8	$\overline{CLK}$
9	CLK
10	N.C.

Pin	Connection X3
1	Preset
2	U_{DD}
3	GND
4	U_{BAT}
5	$\overline{CS}$
6	CS
7	$\overline{DATA}$
8	DATA
9	$\overline{CLK}$
10	CLK

Pin	Connection X4
1	GND
2	U_{BAT}

Dimensional drawing and connection information

scale reduced

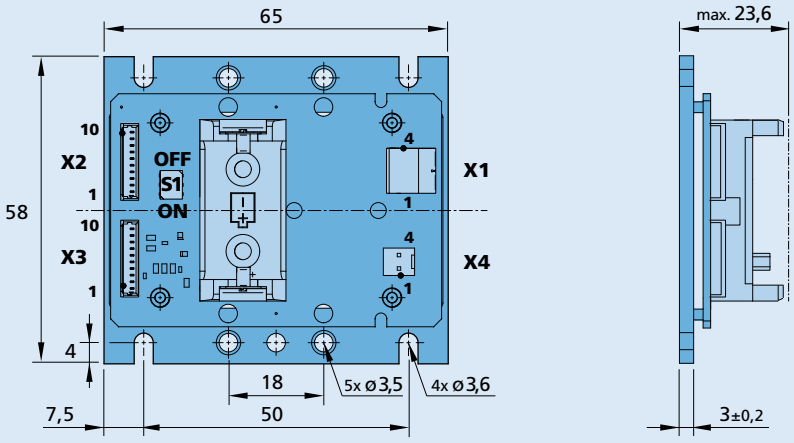

6501.00368

Connection

No.	Function
X1	Preset
X2	Controller MC 50xx
X3	Encoder AEMT-12/16 L
X4	Battery

No.	Switch
S1	DIP-Switch

© DR. FRITZ FAULHABER GMBH & CO. KG
Specifications subject to change without notice.
www.faulhaber.com

NEW

FAULHABER

Accessories

Programming Adapter IMC for Motion Control Systems V3.0
RS232/CAN interface

Part No.: 6501.00391

	6501.00391	
Temperature range:		
– Operating temperature	– 40 … + 85	°C
Dimension and mass:		
– Dimension (L x B x H)	60 x 50 x 18	mm
– Mass	30	g

Note: All switches of S1 are in the "OFF" position in the as-delivered condition. These switches must be set accordingly depending on the application. Delivery condition of switch S2 is position U_P (IMC Standard).

General information

The programming adapter is used to connect Brushless DC-Servomotors with integrated Motion Controller and a serial RS232 or CAN interface. The different operating modes can be selected using the 7 DIP switches.
One Brushless DC-Servomotor with integrated Motion Controller can be connected to each programming adapter.

Description of DIP switch (S1) settings

1: NETMODE	ON	Pull-down resistor (10 kΩ) for RS232 wiring connected. This may only be connected to a node in the RS232 network
	OFF	Deactivated
2: Term	ON	120 Ω terminating resistor for the final node in the CAN network connected to the programming adapter
	OFF	Terminating resistor not connected
3: RS232 [1]	ON	Operation with RS232 interface
	OFF	Deactivated
4: CAN [1]	ON	Operation with CAN interface
	OFF	Deactivated
5: AGND	ON	AGND and GND interconnected.
	OFF	AGND and GND disconnected (with separate ground)
6: DigOut2	ON	Pull-up resistor with LED connected to U_{DD} = +5V
	OFF	Open collector
7: DigOut1	ON	Pull-up resistor with LED connected to U_{DD} = +5V
	OFF	Open collector

Description of DIP switch (S2) settings

U_P	IMC standard - U_P connection at X1 Pin 11
AnIn2	IMC with Option 7431 - AnIn2 connection at X1 Pin 9

Description of DIP switch (S3) settings

Push	DigIn2 connected to U_{DD} = +5V

[1] The pin assignments of X2 depend on the position of switches 3 and 4 of DIP switch S1.

Pin assignment

Pin	Connection X1
1	U_{DD} (+5V, max. 100mA out)
2	GND
3	n.c.
4	n.c.
5	DigIn1 / DigOut2 / AnIn1
6	DigIn2 / AGND
7	DigIn3 / DigOut1
8	n.c.
9	AnIn2 (Option 7431)
10	n.c.
11	U_P
12	GND
13	U_{MOT} (U_B Option 7431)
14	GND

Pin	Connection X3
1	U_P (AnIn2 Option 7431)
2	U_{MOT} (U_B Option 7431)
3	GND
4	DigIn1 / DigOut2 / AnIn1
5	DigIn2 / AGND
6	DigIn3 DigOut1
7	RxD / CAN_L
8	TxD / CAN_H

Option 7431
Common supply voltage for motor and electronics

at RS232 operation [1]

Pin	Connection X2
2	RS-232 / RxD
3	RS-232 / TxD
5	GND

at CAN operation [1]

Pin	Connection X2
2	CAN_L
3	GND
7	CAN_H

Dimensional drawing and connection information

Scale reduced

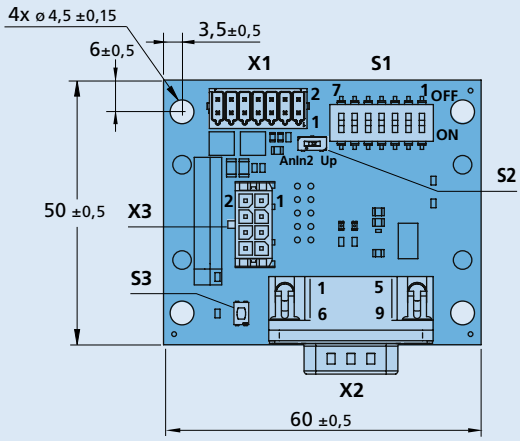

6501.00391

Connection

No.	Function
X1	Supply and I/O connector
X2	RS232 / CAN
X3	Motor connector

No.	Switch
S1	DIP-switch (7 switches)
S2	DIP-switch 1 toggle switch
S3	DIP-switch 1 push button

© DR. FRITZ FAULHABER GMBH & CO. KG
Specifications subject to change without notice.
www.faulhaber.com

NEW

FAULHABER

Accessories

Programming Adapter IMC for Motion Control Systems V3.0
Mini USB interface

Part No.: 6501.00392

	6501.00392	
Temperature range:		
– Operating temperature	– 40 … + 85	°C
Dimension and mass:		
– Dimension (L x B x H)	60 x 50 x 18	mm
– Mass	30	g

Note: All switches of S1 are in the "OFF" position in the as-delivered condition. These switches must be set accordingly depending on the application.
Delivery condition of switch S2 is position U_P (IMC Standard).

General information

The programming adapter is used to connect Brushless DC-Servomotors with integrated Motion Controller and a USB interface.
The different operating modes can be selected using the 7 DIP switches. One Brushless DC-Servomotor with integrated Motion Controller can be connected to each programming adapter.

Driver installation
The driver is included in the setup package of FAULHABER Motion Manager (from version 7.0.1), which can be downloaded from the FAULHABER internet site www.faulhaber.com/MotionManager.

Description of DIP switch (S1) settings

1: NETMODE	ON	Pull-down resistor (10 kΩ) for RS232 wiring connected. This may only be connected to a node in the RS232 network
	OFF	Deactivated
2: N.C.	OFF	
3: RS232 [1]	ON	Operation with RS232 interface
	OFF	Deactivated
4: N.C.	OFF	
5: AGND	ON	AGND and GND interconnected.
	OFF	AGND and GND disconnected (with separate ground)
6: DigOut2	ON	Pull-up resistor with LED connected to U_{DD} = +5V
	OFF	Open collector
7: DigOut1	ON	Pull-up resistor with LED connected to U_{DD} = +5V
	OFF	Open collector

Description of DIP switch (S2) settings

U_P	IMC standard - U_P connection at X1 Pin 11
AnIn2	IMC with Option 7431 - AnIn2 connection at X1 Pin 9

Description of DIP switch (S3) settings

Push	DigIn2 connected to U_{DD} = +5V

[1] The pin assignments of X2 depend on the position of switches 3 and 4 of DIP switch S1.

Pin assignment

Pin	Connection X1
1	U_{DD} (+5V, max. 100mA out)
2	GND
3	n.c.
4	n.c.
5	DigIn1 / DigOut2 / AnIn1
6	DigIn2 / AGND
7	DigIn3 / DigOut1
8	n.c.
9	AnIn2 (Option 7431)
10	n.c.
11	U_P
12	GND
13	U_{MOT} (U_B Option 7431)
14	GND

Connection X2
USB Mini B

Pin	Connection X3
1	U_P (AnIn2 Option 7431)
2	U_{MOT} (U_B Option 7431)
3	GND
4	DigIn1 / DigOut2 / AnIn1
5	DigIn2 / AGND
6	DigIn3 DigOut1
7	RxD
8	TxD

Option 7431
Common supply voltage for motor and electronics

Dimensional drawing and connection information

Scale reduced

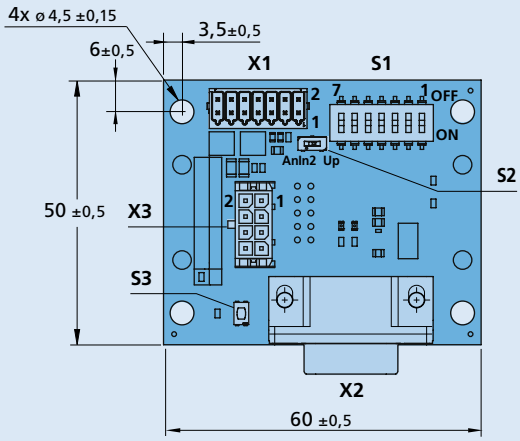

6501.00392

Connection

No.	Function
X1	Supply and I/O connector
X2	USB
X3	Motor connector

No.	Switch
S1	DIP-switch (7 switches)
S2	DIP-switch 1 toggle switch
S3	DIP-switch 1 push button

© DR. FRITZ FAULHABER GMBH & CO. KG
Specifications subject to change without notice.
www.faulhaber.com

Accessories

Adapter for Motion Controller V2.5 and Speed Controller

Encoder Adapter MC, V2.5/SC » IE2/IEH2

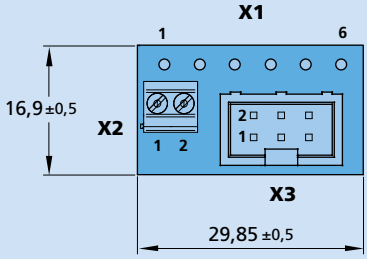

6501.00063

Connection

Pin	Connection X1, X3
1	Motor -
2	Motor +
3	SGND
4	U_{DD}
5	Channel B
6	Channel A

Pin	Connection X2
1	Motor -
2	Motor +

Encoder Adapter MC, V2.5/SC » IE3L/IER3L/IERS3L/HEDL

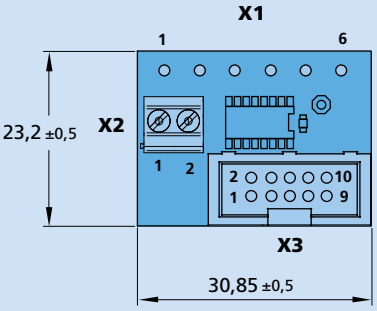

6501.00064

Connection

Pin	Connection X1
1	Motor -
2	Motor +
3	SGND
4	U_{DD}
5	Channel B
6	Channel A

Pin	Connection X2
1	Motor -
2	Motor +

Pin	Connection X3
1	Motor -
2	U_{DD}
3	SGND
4	Motor +
5	Channel $\overline{A}$
6	Channel A
7	Channel $\overline{B}$
8	Channel B
9	Channel $\overline{I}$
10	Channel I

Encoder Adapter MC, V2.5/SC » IE2/IEH2

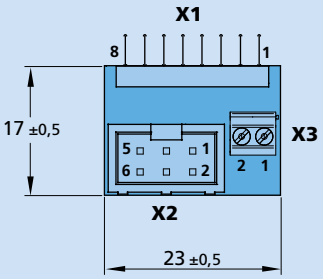

6501.00084

Connection

Pin	Connection X1
1	n.c.
2	Motor -
3	Motor +
4	SGND
5	U_{DD}
6	Channel B
7	Channel A
8	n.c.

Pin	Connection X2
1	Motor -
2	Motor +
3	SGND
4	U_{DD}
5	Channel B
6	Channel A

Pin	Connection X3
1	Motor -
2	Motor +

© DR. FRITZ FAULHABER GMBH & CO. KG
Specifications subject to change without notice.
www.faulhaber.com

Accessories

Adapter for Motion Controller V2.5 and Speed Controller

Encoder Adapter MC, V2.5/SC » IE2/IEH2

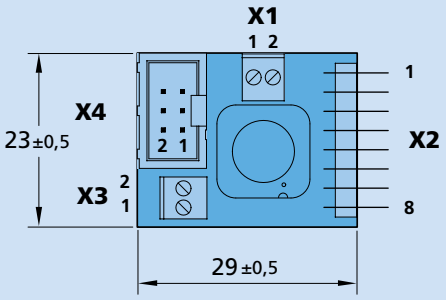

6501.00143

Connection

Pin	Connection X1
1	5. In
2	4. In

Pin	Connection X3
1	Motor -
2	Motor +

Pin	Connection X2
1	4. In
2	Channel A
3	Channel B
4	U_{DD}
5	SGND
6	Motor +
7	Motor -
8	5. In

Pin	Connection X4
1	Motor -
2	Motor +
3	SGND
4	U_{DD}
5	Channel B
6	Channel A

Encoder Adapter MC, V2.5/SC » PA2

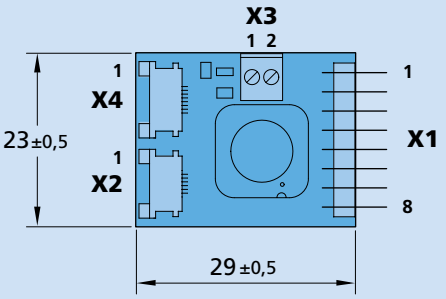

6501.00144

Connection

Pin	Connection X1
1	4. In
2	Channel A
3	Channel B
4	U_{DD} = 5V
5	SGND
6	Motor +
7	Motor -
8	5. In

Pin	Connection X2
1	Motor +
2	U_{DD} = 3,3V
3	Channel A
4	Channel B
5	SGND
6	Motor -

Pin	Connection X3
1	5. In
2	4. In

Pin	Connection X4
1	Motor +
2	Motor +
3	U_{DD} = 3,3V
4	Channel A
5	Channel B
6	SGND
7	Motor -
8	Motor -

Encoder Adapter MC, V2.5/SC » HXM3

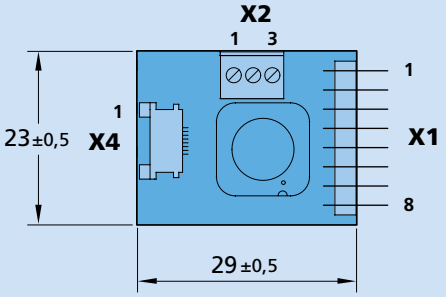

6501.00145

Connection

Pin	Connection X1
1	4. In
2	Channel A
3	Channel B
4	U_{DD} = 5V
5	SGND
6	Motor +
7	Motor -
8	5. In

Pin	Connection X2
1	Channel I
2	5. In
3	4. In

Pin	Connection X4
1	Motor +
2	U_{DD} = 5V
3	Kanal I
4	Channel A
5	Channel B
6	N.C.
7	SGND
8	Motor -

© DR. FRITZ FAULHABER GMBH & CO. KG
Specifications subject to change without notice.
www.faulhaber.com

Accessories

Adapter for Motion Controller V2.5 and Speed Controller

Encoder Adapter MC, V2.5/SC »IE3/IEH3/IER3/IERS3

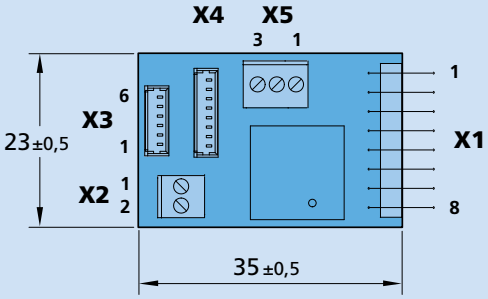

6501.00193

Connection

Pin	Connection X1
1	4. In
2	Channel A
3	Channel B
4	U_{DD} = 5V
5	SGND
6	Motor +
7	Motor -
8	5 .In

Pin	Connection X3
1	N.C.
2	Channel I
3	SGND
4	U_{DD} = 5V
5	Channel B
6	Channel A

Pin	Connection X2
1	Motor +
2	Motor -

Pin	Connection X4
1	N.C.
2	Motor -
3	Motor +
4	SGND
5	U_{DD} = 5V
6	Channel B
7	Channel A
8	Channel I

Pin	Connection X5
1	4. In
2	5. In
3	Channel I

Encoder Adapter MC, V2.5/SC »IE3/IEH3/IER3/IERS3

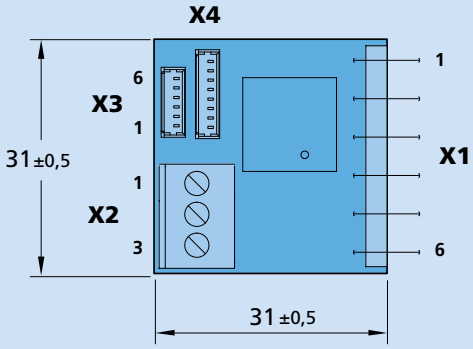

6501.00194

Connection

Pin	Connection X1
1	Channel A
2	Channel B
3	U_{DD} = 5V
4	SGND
5	Motor +
6	Motor -

Pin	Connection X2
1	Channel I
2	Motor +
3	Motor -

Pin	Connection X3
1	N.C.
2	Channel I
3	SGND
4	U_{DD} = 5V
5	Channel B
6	Channel A

Pin	Connection X4
1	N.C.
2	Motor -
3	Motor +
4	SGND
5	U_{DD} = 5V
6	Channel B
7	Channel A
8	Channel I

© DR. FRITZ FAULHABER GMBH & CO. KG
Specifications subject to change without notice.
www.faulhaber.com

Accessories

Adapter for Speed Controller

Encoder Adapter SC » IEP3

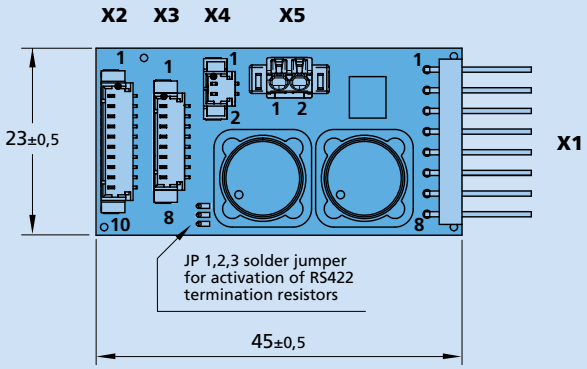

6501.00385

Connection

Pin	X1 - Header
1	Channel I
2	Channel B
3	Channel A
4	U_{DD}
5	GND
6	Motor +
7	Motor -
8	Reserved

Pin	X3 Encoder IEP3
1	N.C.
2	Motor -
3	Motor +
4	GND
5	U_{DD}
6	Channel B
7	Channel A
8	Channel I

Pin	X2
1	Motor -
2	U_{DD}
3	GND
4	Motor +
5	Channel $\overline{A}$
6	Channel A
7	Channel $\overline{B}$
8	Channel B
9	Channel $\overline{I}$
10	Channel I

Pin	X4 - Motor
1	Motor +
2	Motor -

Pin	X5 - Motor
1	Motor +
2	Motor -

Motor Adapter SC » 0620...B

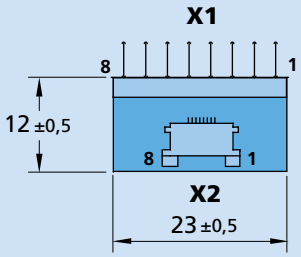

6501.00083

Connection

Pin	Connection X1
1	Motor C
2	Motor B
3	Motor A
4	SGND
5	U_{DD}
6	Hall Sensor C
7	Hall Sensor B
8	Hall Sensor A

Pin	Connection X2
1	Motor C
2	Motor B
3	Hall Sensor C
4	U_{DD}
5	SGND
6	Hall Sensor A
7	Hall Sensor B
8	Motor A

Motor Adapter SC » 0824...B/1028...B-IEM3

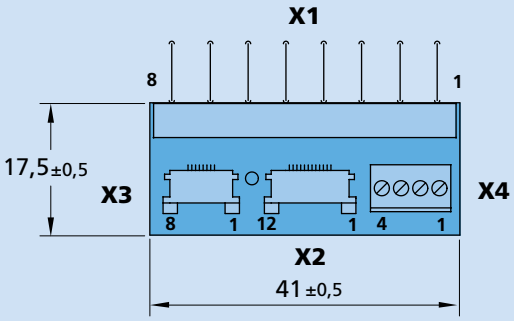

6501.00116

Connection

Pin	Connection X1
1	Motor C
2	Motor B
3	Motor A
4	SGND
5	U_{DD}
6	Hall Sensor C
7	Hall Sensor B
8	Hall Sensor A

Pin	Connection X3
1	Motor C
2	Motor B
3	Motor A
4	SGND
5	U_{DD}
6	Hall Sensor C
7	Hall Sensor B
8	Hall Sensor A

Pin	Connection X2
1	Motor C
2	Motor B
3	Motor A
4	SGND
5	U_{DD}
6	Hall Sensor C
7	Hall Sensor B
8	Hall Sensor A
9	Channel B
10	Channel A
11	Channel I
12	n.c.

Pin	Connection X4
1	SGND
2	Channel B
3	Channel A
4	Channel I

© DR. FRITZ FAULHABER GMBH & CO. KG
Specifications subject to change without notice.
www.faulhaber.com

Accessories

Adapter for Speed Controller

Motor Adapter SC » 0824...B/1028...B-IEM3

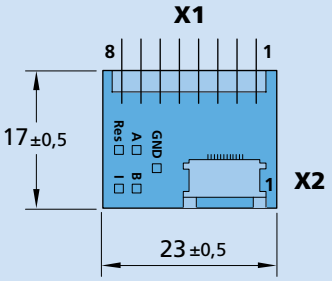

6501.00163

Connection

Pin	Connection X1
1	Phase C
2	Phase B
3	Phase A
4	GND
5	U_{DD}
6	Hall Sensor C
7	Hall Sensor B
8	Hall Sensor A

Pin	Connection X2
1	Phase C
2	Phase B
3	Phase A
4	GND
5	U_{DD}
6	Hall Sensor C
7	Hall Sensor B
8	Hall Sensor A
9	Channel B
10	Channel A
11	Channel I
12	N.C.

© DR. FRITZ FAULHABER GMBH & CO. KG
Specifications subject to change without notice.
www.faulhaber.com

Accessories

Adapter for Motion Controller MC V2.5 and Speed Controller

Motor Adapter SC » 1660...BHx

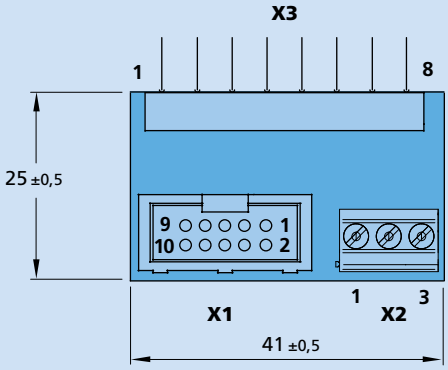

6501.00324

Connection

Pin	Connection X1
1	SGND
2	U_{DD}
3	Hall Sensor C
4	Hall Sensor $\overline{C}$
5	Hall Sensor B
6	Hall Sensor $\overline{B}$
7	Hall Sensor A
8	Hall Sensor $\overline{A}$
9	n.c.
10	n.c.

Pin	Connection X2
1	Phase A
2	Phase B
3	Phase C

Pin	Connection X3
1	Hall Sensor A
2	Hall Sensor B
3	Hall Sensor C
4	U_{DD}
5	SGND
6	Phase A
7	Phase B
8	Phase C

Motor Adapter MC, V2.5/SC » BX4 (Hall sensors)

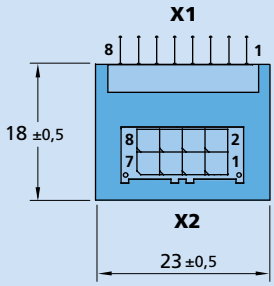

6501.00085

Connection

Pin	Connection X1 and X2
1	Phase C
2	Phase B
3	Phase A
4	SGND
5	U_{DD}
6	Hall Sensor C
7	Hall Sensor B
8	Hall Sensor A

Motor Adapter MC, V2.5/SC » BX4 (Hall sensors)

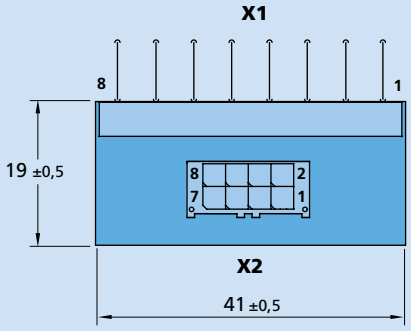

6501.00086

Connection

Pin	Connection X1 and X2
1	Phase C
2	Phase B
3	Phase A
4	SGND
5	U_{DD}
6	Hall Sensor C
7	Hall Sensor B
8	Hall Sensor A

© DR. FRITZ FAULHABER GMBH & CO. KG
Specifications subject to change without notice.
www.faulhaber.com

Accessories

Adapter for Motion Controller MC V2.5

Motor Adapter MC, V2.5 » LM0830-...-01

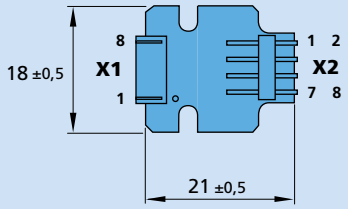

6501.00117

Connection

Connectors X1	
1	Motor C
2	Motor B
3	Motor A
4	SGND
5	+5V
6	Hall Sensor C
7	Hall Sensor B
8	Hall Sensor A

Connectors X2	
1	Motor C
2	Hall Sensor A
3	+5V
4	SGND
5	Hall Sensor B
6	Hall Sensor C
7	Motor B
8	Motor A

Motor Adapter MC, V2.5 » LM1247-...-11C/LM1483-...-11C

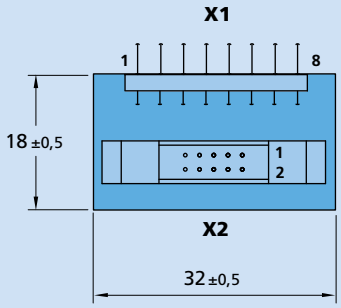

6501.00171

Connection

Pin	Connection X1
1	Hall Sensor A
2	Hall Sensor B
3	Hall Sensor C
4	U_{DD}
5	SGND
6	Phase A
7	Phase B
8	Phase C

Pin	Connection X2
1	Phase C
2	Phase B
3	Phase A
4	SGND
5	U_{DD}
6	Hall Sensor C
7	Hall Sensor B
8	Hall Sensor A
9	n.c.
10	n.c.

Motor Adapter MC, V2.5 » LM1247-...-11C/LM1483-...-11C/LM2070-...-11C

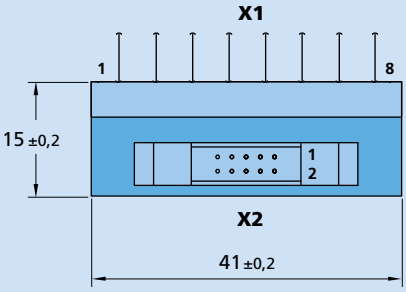

6501.00182

Connection

Pin	Connection X1
1	Hall Sensor A
2	Hall Sensor B
3	Hall Sensor C
4	+ 5V
5	SGND
6	Phase A
7	Phase B
8	Phase C

Pin	Connection X2
1	Phase C
2	Phase B
3	Phase A
4	SGND
5	+ 5V
6	Hall Sensor C
7	Hall Sensor B
8	Hall Sensor A
9	n.c.
10	n.c.

© DR. FRITZ FAULHABER GMBH & CO. KG
Specifications subject to change without notice.
www.faulhaber.com

Accessories

Adapter for Motion Controller MC V2.5/V3.0

Motor Adapter MC, V2.5 » 0620 ... B

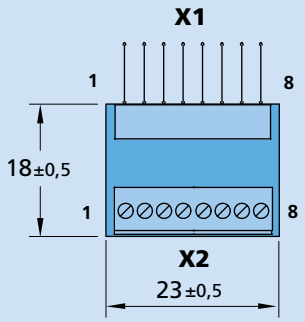

6501.00321

Connection

Pin	Connection X1, X2
1	Hall Sensor A
2	Hall Sensor B
3	Hall Sensor C
4	U_{DD}
5	SGND
6	Phase A
7	Phase B
8	Phase C

Connection Adapter SCS » USB

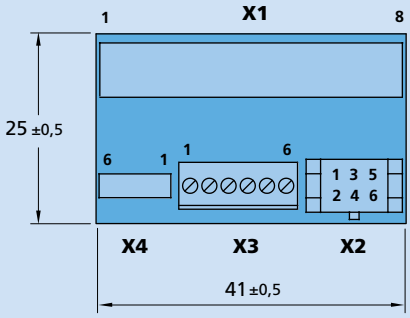

6501.00112

Connection

Pin	Connection X1
1	U_P
2	U_{mot}
3	SGND
4	U_{nsoll}
5	DIR
6	FG
7	IO2
8	IO1

Pin	Connection X2, X3, X4
1	U_P
2	U_{mot}
3	SGND
4	U_{nsoll}
5	DIR
6	FG

Adapter PC-MC, V2.5 » USB-CAN

Scale reduced

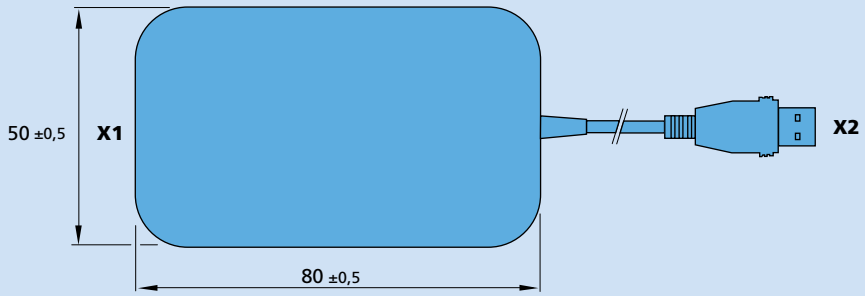

6501.00128

Connection

Connection X1
CAN (Sub-D9)

Connection X2
USB

© DR. FRITZ FAULHABER GMBH & CO. KG
Specifications subject to change without notice.
www.faulhaber.com

Accessories

Adapter for Motion Controller MC V2.5/V3.0

Adapter PC-MC, V2.5 » USB-RS232

Scale reduced

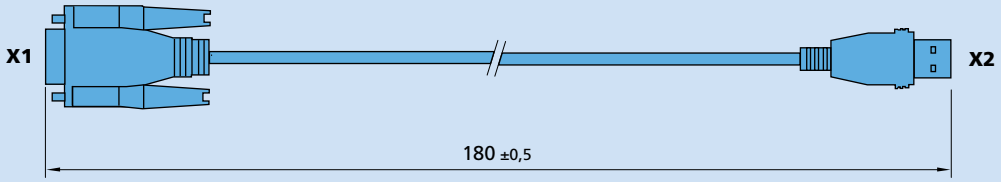

6501.00170

Connection

Connection X1
RS232

Connection X2
USB

Adapter Set MC50xx, V3.0 » Encoder

Scale reduced

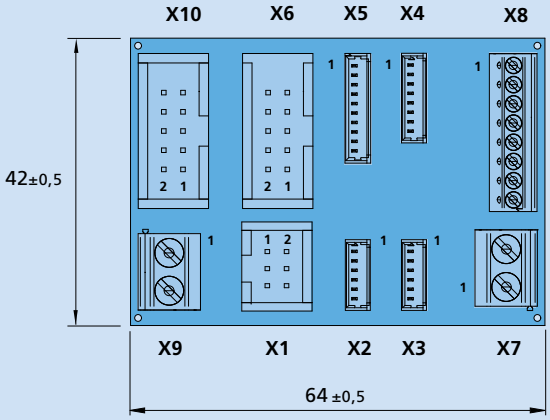

6501.00323

Connection

No.	Function
X1	IE2, IEH2
X2	IE2, IEH2
X3	IE3, IEF3, IER3, IERS3
X4	IEH3
X5	IE3L, IEF3L, IER3L, IERS3L, HEDL, AESL
X6	IE3L, IEF3L, IER3L, IERS3L, HEDL, AESL
X7	DC-phase
X8	Generic Encoder
X9	DC-phase
X10	Controller

Pin	Connection X8
1	U_{DD}
2	GND
3	Channel $\overline{A}$
4	Channel A
5	Channel $\overline{B}$
6	Channel B
7	Channel $\overline{I}$
8	Channel I

© DR. FRITZ FAULHABER GMBH & CO. KG
Specifications subject to change without notice.
www.faulhaber.com

Accessories

Cable

Cable for Motion Control Systems

Article no.	Type	Version	Length mm
6501.00270	Cable MCS, V3.0	EtherCAT, connector M8-M8, straight	1 500
6501.00210	Cable MCS, V3.0	EtherCAT, connector M8-M8, angled	1 500
6501.00271	Cable MCS, V3.0	EtherCAT, connector M8-RJ45, straight	1 500
6501.00211	Cable MCS, V3.0	EtherCAT, connector M8-RJ45, angled	1 500
6501.00255	Cable MCS, V3.0	Supply, connector M12, 4-pin, straight	1 500
6501.00256	Cable MCS, V3.0	Supply, connector M12, 4-pin, angled	1 500
6501.00257	Cable MCS, V3.0	I/O, connector M12, 12-pin, straight	1 500
6501.00258	Cable MCS, V3.0	I/O, connector M12, 12-pin, angled	1 500
6501.00140	Cable CxD, V2.5	BX4	1 000

Cable for Speed Controller

Article no.	Type	Version	Length mm
6501.00025	Cable SC	IE2, IEH2	200
6501.00141	Cable SC	BX4 (Hall sensors)	300
6501.00002	Adapter cable for encoder DC SC	HEDS	600
6501.00287	Adapter cable for encoder DC SC	HEDS	300

Cable for Motion Controller V2.5

Article no.	Type	Version	Length mm
6501.00025	Cable MC, V2.5	IE2, IEH2	200
6501.00118	Cable MC, V2.5	LM0830	200
6501.00141	Cable MC, V2.5	BX4 (Hall sensors)	300
6501.00002	Adapter cable for encoder DC MC, V2.5	HEDS	600
6501.00287	Adapter cable for encoder DC MC, V2.5	HEDS	300
6501.00003	Cable (zero modem) PC-MC, V2.5	RS232-RS232	3 000

Cable for Motion Controller V3.0

Article no.	Type	Version	Length mm
6501.00224	Cable MC50xx	USB 2.0, A-MINI B	1 000
6501.00377	Cable MC50xx, MC3001, MC3603, V3.0	IE3L, IER3L, IERS3L, HEDL, AESL	2 000
6501.00262	Cable MC5010, V3.0	BL Phase (3274...BP4, 4490...B/BS)	2 000
6501.00263	Cable MC5010, V3.0	3274...BP4, Hall sensors	2 000
6501.00264	Cable MC50xx, V3.0	BL Hall sensors+Phases	2 000
6501.00265	Cable MC50xx, V3.0	DC supply	2 000
6501.00266	Cable MC50xx, MC3001, MC3603, V3.0	IEH3	2 000
6501.00267	Cable MC50xx, MC3001, MC3603, V3.0	IE3, IE2, IEH2, IER3, IERS3, HEDS	2 000
6501.00268	Cable MC50xx, V3.0	RS232	300
6501.00269	Cable MC50xx, V3.0	CAN	300
6501.00272	Cable MC5004, V3.0	EtherCAT, RJ45-RJ45 straight (board connection)	200
6501.00274	Cable MC50xx, V3.0	EtherCAT, RJ45-RJ45	2 000
6501.00327	Cable MC50xx, V3.0	BHx (Hall sensors + IEM3)	300
6501.00328	Cable MC50xx, V3.0	BHx (Phases)	300
6501.00338	Cable MC50xx, V3.0	BX4 (Phases)	2 000
6501.00275	Adapter cable for encoder DC MC, V3.0	HEDS	130
6501.00278	Ribbon cable MC5004, V3.0	EtherCAT, DIN-DIN (board connection)	100
6501.00279	Ribbon cable MC5004, V3.0	EtherCAT, DIN-DIN (motherboard connection)	250
6501.00369	Cable MC30xx, MC36xx, V3.0	Battery adapter AEMTL	150
6501.00370	Cable MC50xx, MC3001, MC3603, V3.0	AEMTL	2 000
6501.00371	Cable MC30xx, MC36xx, V3.0	BL Hall sensors+Phases	2 000
6501.00372	Cable MC30xx, MC36xx, V3.0	DC Phases	2 000
6501.00373	Cable MC30xx, MC36xx, V3.0	IEH3L	75

Cable for Motion Controller Stepper Motors

Article no.	Type	Version	Length mm
6502.00509	Cable MCST3601	DM66200H	250

Notice: Other cabel lengths are available on request.

© DR. FRITZ FAULHABER GMBH & CO. KG
Specifications subject to change without notice.
www.faulhaber.com

Accessories

Other accessories

Other accessories

Article no.	Type	Version
6501.00375	Installation set MC V2.5/V3.0, SC (Housing variant)	Top-hat rail
6501.00223	Installation set MC5005/5010, V3.0	Top-hat rail
6502.00338	Mounting adapter foot MC V2.5/V3.0, SC (Housing variant)	Top-hat rail
6501.00221	Connector set MC5005/5010, V3.0	Supply side
6501.00222	Connector set MC5005/5010, V3.0	Motor side
6500.01676	Motherboard MB4 MC5004, V3.0	Horizontal connector
6500.01681	Motherboard MB4 MC5004, V3.0	Vertical connector
6501.00234	Connector set Motherboard MB4 MC5004, V3.0	Supply side
6501.00276	Connector set Motherboard MB4 MC5004, V3.0	Controller
6501.00362	Connector set MC3001/3603, V3.0	Supply side and Motor side (for MC3001 with MB 6500.01802 or MC3603)

© DR. FRITZ FAULHABER GMBH & CO. KG
Specifications subject to change without notice.
www.faulhaber.com

Accessories combination

Speed Control Systems

Article no.	Designation	Motor/option	Interface/connector	Length	2232/ 2250 ... BX4 SC	3242/ 3268 ... BX4 SC	2610/ 2622 ... B SC	1525/ 1935/ 3153 ... BRC	2214/ 3216/ 4221 ... BXT SC
6501.00096	SCS programming adapter		USB		• (9)	• (9)	• (9)	• (9)	• (9)
6501.00088	SCS programming adapter		USB/RS232		•	•	•	•	•
6501.00112	SCS connection adapter		USB		• (9)	• (9)	• (9)	• (9)	• (9)

Motion Control Systems

Article no.	Designation	MC version	Motor/option	Interface/connector	Length	2232/ 2250 ... BX4 CSD/ COD/ CCD	3242/ 3268 ... BX4 3564 ... B CS/ CC/ CO	MCS 3242/ 3268 ... BX4 MCS 3274 ... BP4 ET	MCS 3242/ 3268 ... BX4 MCS 3274 ... BP4 RS/ CO
6501.00065	Cx programming adapter	V2.5	BX4	RS232/CAN			•		
6501.00159	CS programming adapter	V2.5		Mini USB			• (3)		
6501.00113	CxD programming adapter	V2.5	BX4	RS232/CAN		• (4)			
6501.00135	CSD programming adapter	V2.5		Mini USB		• (3/4)			
6501.00283	MCS programming adapter	V3.0		RS232/CAN					•
6501.00284	MCS programming adapter	V3.0		USB				•	•
6501.00140	CxD cable	V2.5	BX4		1000 mm	•			
6501.00270	MCS cable	V3.0		EtherCAT, M8-M8 connector, straight	1500 mm			•	
6501.00210	MCS cable	V3.0		EtherCAT, M8-M8 connector, angled	1500 mm			•	
6501.00271	MCS cable	V3.0		EtherCAT, M8-RJ45 connector, straight	1500 mm			•	
6501.00211	MCS cable	V3.0		EtherCAT, M8-RJ45 connector, angled	1500 mm			•	
6501.00255	MCS cable	V3.0		Supply, M12 connector, 4-pin, straight	1500 mm			•	•
6501.00256	MCS cable	V3.0		Supply, M12 connector, 4-pin, angled	1500 mm			•	•
6501.00257	MCS cable	V3.0		I/O, M12 connector, 12-pin, straight	1500 mm			•	•
6501.00258	MCS cable	V3.0		I/O, M12 connector, 12-pin, angled	1500 mm			•	•
6501.00134	BC 5004 braking chopper						•	•	•

1) without CF/ CO
2) without RS
3) without CO/ COD
4) special number 3830 for motor BX4 necessary
5) special number 3806 for encoder IE3L, IER3L, IERS3L necessary
6) special number 3807 for encoder IE3, IER3, IERS3 necessary
7) special number 3692 & 3830 required for analogue Hall
8) only in combination with 6501.00117/ 6501.00118
9) only in combination with 6501.00112/ 6501.00096
10) not with 3268 … BX4
11) without ET
12) only in combination with 6501.00121
13) only in combination with 6501.00267/ 6501.00275
14) not with 32xx … BX4
15) special number K4456 for encoder IEP3 necessary

• only recommended for "S" variant (screw terminal)

Accessories also for circuit board variants usable with MC V2.5 and SC via customer-specific connection.

Other cable lengths are available on request.

FAULHABER

Speed Controller

Article no.	Designation	Motor/option	Encoder/sensor	Filter	Interface/ connector	Length	SC 1801 S/ F	SC 2402 P	SC 2804 S	SC 5004 P	SC 5008 S
6501.00096	SC programming adapter				USB				•		•
6501.00097	SC programming adapter				USB		•				
6501.00088	SC programming adapter				USB/RS232		•		•		•
6501.00085	SC motor adapter	BX4	Hall sensors				• (4/14)				
6501.00086	SC motor adapter	BX4	Hall sensors						• (4)		• (4)
6501.00083	SC motor adapter	0620 ... B	Hall sensors				•				
6501.00116	SC motor adapter	0824 ... B 1028 ... B	Hall sensors IEM3						•		
6501.00163	SC motor adapter	0824 ... B 1028 ... B	Hall sensors IEM3				•				
6501.00385	SC encoder adapter		IEP3				• (15)				
6501.00084	SC encoder adapter		IE2 IEH2				•				
6501.00063	SC encoder adapter		IE2 IEH2						•		•
6501.00143	SC encoder adapter		IE2 IEH2				•				
6501.00193	SC encoder adapter		IE3 IER3 IERS3 IEH3				• (6)				
6501.00194	SC encoder adapter		IE3 IER3 IERS3 IEH3						• (6)		• (6)
6501.00144	SC encoder adapter		PA2				•				
6501.00145	SC encoder adapter		HXM3				•				
6501.00064	SC encoder adapter		IE3L IER3L IERS3L HEDL						• (5)		• (5)
6501.00335	SC encoder adapter		AESL				•				
6501.00336	SC encoder adapter		AESL						•		•
6502.00338	Mounting adapter foot for top-hat rail								•		•
6501.00375	DIN rail mounting set								•		•
6501.00025	SC cable		IE2 IEH2			200 mm	•		•		•
6501.00141	SC cable	BX4	Hall sensors			300 mm	• (4)		• (4)		• (4)
6501.00002	DC SC adapter cable for encoder		HEDS			600 mm	•		•		•
6501.00287	DC SC adapter cable for encoder		HEDS			300 mm	•		•		•
6501.00134	BC 5004 braking chopper								•		•
6501.00367	SC supply filter			EFS 3004 S			•	•	•		
6501.00350	SC supply filter			EFS 5004 S						•	•
6501.00352	SC motor filter			EFM 5001 S			•				
6501.00357	SC motor filter			EFM 5003 S				•	•	•	
6501.00351	SC motor filter			EFC 5008 S			•	•	•	•	•
6501.00358	SC motor filter			EFM 5008 S						•	•

1) without CF/ CO
2) without RS
3) without CO/ COD
4) special number 3830 for motor BX4 necessary
5) special number 3806 for encoder IE3L, IER3L, IERS3L necessary
6) special number 3807 for encoder IE3, IER3, IERS3 necessary
7) special number 3692 & 3830 required for analogue Hall
8) only in combination with 6501.00117/ 6501.00118
9) only in combination with 6501.00112/ 6501.00096
10) not with 3268 … BX4
11) without ET
12) only in combination with 6501.00121
13) only in combination with 6501.00267/ 6501.00275
14) not with 32xx … BX4
15) special number K4456 for encoder IEP3 necessary

• only recommended for "S" variant (screw terminal)

Accessories also for circuit board variants usable with MC V2.5 and SC via customer-specific connection.

Other cable lengths are available on request.

Accessories combination

Motion Controller V2.5

Article no.	Designation	Motor/ option	Encoder/ sensor	Filter	Interface/ connector	Length	MCDC 3002 S RS/ CF/ CO	MCDC 3006 S RS/ CF/ CO	MCBL 3002 S/ F RS/ CF/ CO	MCBL 3006 S RS/ CF/ CO	MCLM 3002 S/ F RS/ CF/ CO	MCLM 3006 S RS/ CF/ CO	MCST 3601
6501.00121	MC programming adapter				RS232/CAN		•		•		•		•
6501.00136	MC programming adapter				Mini USB		• (1)		• (1)		• (1)		
6501.00085	MC motor adapter	BX4	Hall sensors						• (7)				
6501.00086	MC motor adapter	BX4	Hall sensors							• (7)			
6501.00321	MC motor adapter	0620 ... B	Hall sensors						•				
6501.00182	MC motor adapter	LM1247-...-11C LM1483-...-11C LM2070-...-11C	Hall sensors									•	
6501.00171	MC motor adapter	LM1247-...-11C LM1483-...-11C	Hall sensors								•		
6501.00117	MC motor adapter	LM0830-...-01									• (8)		
6501.00084	MC encoder adapter		IE2 IEH2				•						
6501.00063	MC encoder adapter		IE2 IEH2					•					
6501.00193	MC encoder adapter		IE3 IER3 IERS3 IEH3				• (6)						
6501.00194	MC encoder adapter		IE3 IER3 IERS3 IEH3					• (6)					
6501.00144	MC encoder adapter		PA2				•						
6501.00145	MC encoder adapter		HXM3				•						
6501.00143	MC encoder adapter		IE2 IEH2				•						
6501.00064	MC encoder adapter		IE3L IER3L IERS3L HEDL					• (5)					
6502.00338	Mounting adapter foot for top-hat rail							•		•		•	
6501.00375	DIN rail mounting set							•		•		•	
6501.00170	PC-MC connection adapter				USB-RS232	1800 mm	• (1/12)	• (1)	• (1/12)	• (1)	• (1/12)	• (1)	
6501.00128	PC-MC connection adapter				USB-CAN	1000 mm	• (2/12)	• (2)	• (2/12)	• (2)	• (2/12)	• (2)	
6501.00118	MC cable	LM0830				200 mm					• (8)		
6501.00025	MC cable		IE2 IEH2			200 mm	•	•	•				
6501.00141	MC cable	BX4	Hall sensors			300 mm			• (4)	• (4)			
6501.00002	DC MC adapter cable for encoder		HEDS			600 mm	•	•					
6501.00287	DC MC adapter cable for encoder		HEDS			300 mm	•	•					
6501.00003	PC-MC cable (null modem)				RS232-RS232	3000 mm	• (1/12)	• (1)	• (1/12)	• (1)	• (1/12)	• (1)	
6501.00134	BC 5004 braking chopper							•		•		•	
6501.00367	MC supply filter			EFS 3004 S			•						
6501.00351	MC motor filter			EFC 5008 S			•	•	•	•	•	•	
6502.00509	MC cable	DM66200H				250 mm							•

1) without CF/ CO
2) without RS
3) without CO/ COD
4) special number 3830 for motor BX4 necessary
5) special number 3806 for encoder IE3L, IER3L, IERS3L necessary
6) special number 3807 for encoder IE3, IER3, IERS3 necessary
7) special number 3692 & 3830 required for analogue Hall
8) only in combination with 6501.00117/ 6501.00118
9) only in combination with 6501.00112/ 6501.00096
10) not with 3268 … BX4
11) without ET
12) only in combination with 6501.00121
13) only in combination with 6501.00267/ 6501.00275
14) not with 32xx … BX4
15) special number K4456 for encoder IEP3 necessary

• only recommended for "S" variant (screw terminal)

Accessories also for circuit board variants usable with MC V2.5 and SC via customer-specific connection.

Other cable lengths are available on request.

FAULHABER

Motion Controller V3.0

Article no.	Designation	Motor/ option	Encoder/ sensor	Filter	Interface/connector	Length	MC 5005 S RS/ CO/ ET with DC	MC 5005 S RS/ CO/ ET with BL	MC 5010 S RS/ CO/ ET with DC	MC 5010 S RS/ CO/ ET with BL	MC 5004 P RS/ CO/ ET with DC/ BL	MC 3001 B/P
6501.00323	MC 50xx adapter set		all				•	•	•	•		
6501.00262	MC cable 5010	3274 ... BP4 4490 ... B/ BS			Brushless phase	2000 mm				•		
6501.00263	MC cable 5010	3274 ... BP4			Brushless Hall sensors	2000 mm				•		
6501.00264	MC cable 50xx	2264 ... BP4			Brushless Hall sensors + phase	2000 mm		•		•		
6501.00267	MC cable 50xx/ 3001		IE3/ IE2/ IEH2 IER3/ IERS3 HEDS IEF3			2000 mm	• (13)	• (13)	• (13)	• (13)		•
6501.00338	MC cable 50xx	BX4			Brushless phase	2000 mm	•	•	•	•		
6501.00275	Adapter cable for encoder		HEDS			130 mm	• (13)	• (13)	• (13)	• (13)		
6501.00252	MC cable 50xx/ 3001		IE3L IER3L/ IERS3L HEDL AESL IEF3			2000 mm	•	•	•	•		•
6501.00265	MC cable 50xx				DC supply	2000 mm	•		•			
6501.00269	MC cable 50xx				CAN	300 mm	• (2/11)	• (2/11)	• (2/11)	• (2/11)		
6501.00268	MC cable 50xx				RS232	300 mm	• (3/11)	• (3/11)	• (3/11)	• (3/11)		
6501.00224	MC cable 50xx				USB 2.0 A-MINI B connector	1000 mm	•	•	•	•		
6501.00266	MC cable 50xx/ 3001	1336 ... CXR 1727 ... CXR 1741 ... CXR	IEH3			2000 mm	•		•			•
6501.00223	MC 5005/ 5010 DIN rail mounting set						•	•	•	•		
6502.00338	Mounting adapter foot for top-hat rail						•	•	•	•		
6501.00375	DIN rail mounting set						•	•	•	•		
6501.00221	MC 5005/ 5010 connector set				Supply side		•	•	•	•		
6501.00222	MC 5005/ 5010 connector set				Motor side		•	•	•	•		
6501.00274	MC cable 50xx				EtherCAT, RJ45-RJ45	2000 mm	• (2/3)	• (2/3)	• (2/3)	• (2/3)	• (2/3)	
6501.00278	MC 5004 ribbon cable				EtherCAT, DIN-DIN (circuit board connection)	100 mm					• (2/3)	
6501.00279	MC 5004 ribbon cable				EtherCAT, DIN-DIN (basic board connection)	250 mm					• (2/3)	
6501.00272	MC cable 5004				EtherCAT, RJ45-RJ45 straight (circuit board connection)	200 mm					•	
6500.01681	MC 5004 motherboard MB4				Vertical connector						•	
6500.01676	MC 5004 motherboard MB4				Horizontal connector						•	
6501.00234	MB4 MC 5004 motherboard connector set				Supply side						•	
6501.00276	MB4 MC 5004 motherboard connector set				Controller						•	
6501.00134	BC 5004 braking chopper						•	•	•	•		
6501.00368	MC 50xx battery adapter		AEMTL				•	•	•	•		
6501.00369	MC cable 50xx battery adapter cable		AEMTL			150 mm	•	•	•	•		
6501.00370	MC cable 50xx/ 3001		AEMTL			2000 mm	•	•	•	•		•
6501.00371	MC cable 3001	BXT/ BX4			Brushless Hall sensors + phase	2000 mm						•
6501.00372	MC cable 3001	CR/ CXR			Phase	2000 mm						•
6501.00373	MC cable 3001		IEH3L			75 mm						•
6501.00359	MC 50xx connector set			EFM5001/ 5003/ 5008	Motor side		•	•	•	•		
6501.00362	MC 3001 connector set				Motor- and supply side							•
6501.00360	MC 50xx connector set			EFS 5004/ 3004	DC supply		•	•	•	•		
6501.00350	MC 50xx supply filter			EFS 5004 S	DC supply		•	•	•	•	•	
6501.00357	MC 50xx motor filter			EFM 5003 S	Motor side		•	•			•	
6501.00358	MC 50xx motor filter			EFM 5008 S	Motor side		•	•	•	•		
6501.00351	MC 50xx motor filter			EFC 5008 S	Motor side		•	•	•	•	•	

Accessories

Electronic filters

EFC 5008

		EFC 5008 S	
Power supply	U_P	0 ... 50	V
Max. continuous power losses [1]	P_{cont}	400	W
Continuous output current	I_{cont}	8	A
Operating temperature range		-25 ... + 65	°C
Storage temperature range		-25 ... + 85	°C
Dimensions (L x W x H)		65 x 58 x 18	mm
Mass		66	g

[1] at 22°C ambient temperature

General information

These filters only require three phase connections. The 0 V return line is not required.

All commonly used PWM frequencies of the FAULHABER controllers can be used.

The filters reduce the rise time of the motor voltage/current and thereby reduce the high-frequency coupling currents on the shield.

It is recommended to keep the connection cable between the controller and filter as short as possible.

Typical impedance

Typical impedance describes the attenuation of the filter for compensation of high-frequency interference at the semiconductor output stage.

Details on use of the filter are given in the respective technical manual.

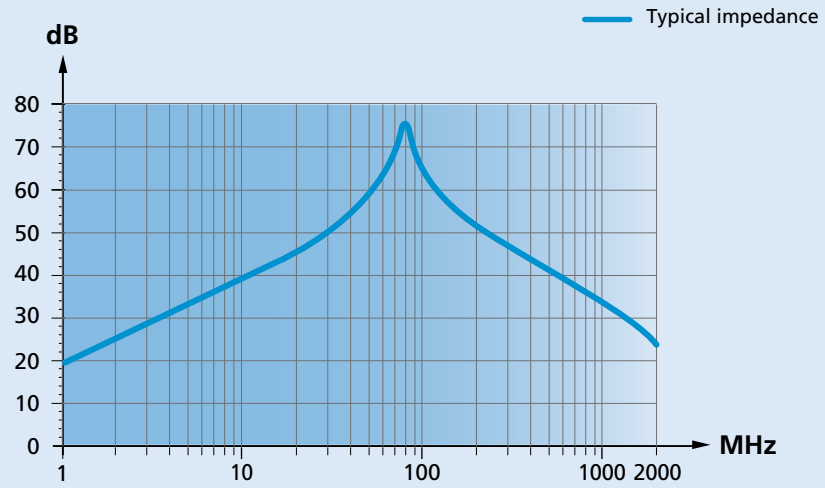

Circuit diagram / Connection diagram

Circuit diagram

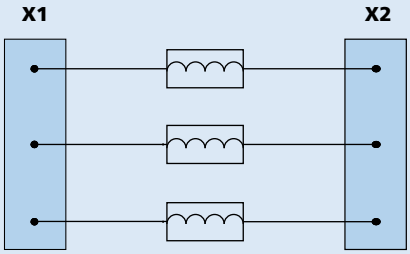

Connection diagram

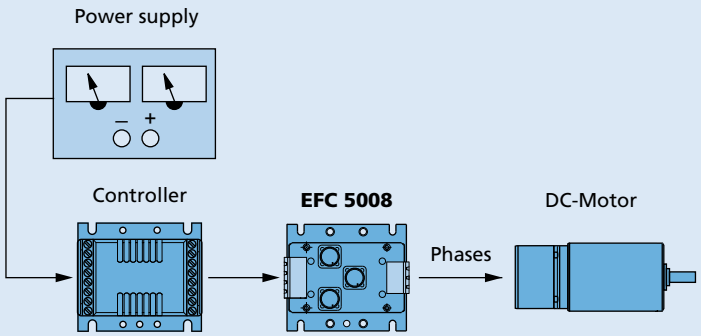

© DR. FRITZ FAULHABER GMBH & CO. KG
Specifications subject to change without notice.
www.faulhaber.com

Dimensional drawing and connection information

Scale reduced

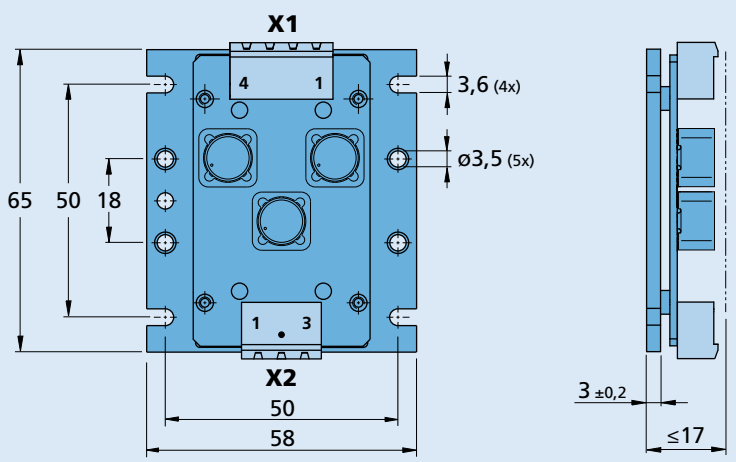

EFC 5008 S

Connection information

X1	EFC 5008 S input
1	Motor C
2	Motor B
3	Motor A
4	GND

X2	Motor output
1	Motor A
2	Motor B
3	Motor C

Product combination

Electronic Filters	Speed Controller	Motion Controller V3.0	
EFC 5008 S	SC 1801 P SC 1801 F SC 1801 S SC 2402 P SC 2804 S SC 5004 P SC 5008 S	MC 5004 P MC 5005 S MC 5010 S	

© DR. FRITZ FAULHABER GMBH & CO. KG
Specifications subject to change without notice.
www.faulhaber.com

Accessories

Electronic filters

EFM 5001 / 5003 / 5008

		EFM 5001 S	EFM 5003 S	EFM 5008 S	
Power supply	U_P	0 ... 50	0 ... 50	0 ... 50	V
Max. continuous power losses [1]	P_{cont}	50	150	350	W
Continuous output current	I_{cont}	1	3	8	A
Max. peak current [2]	I_{max}	3	9	24	A
Inductance		39	47	39	µH
Operating temperature range		-25 ... + 65			°C
Storage temperature range		-25 ... + 85			°C
Dimensions (L x W x H)		65 x 58 x 18	65 x 58 x 18	105 x 75 x 43	mm
Mass		66	66	254	g

[1] at 22°C ambient temperature
[2] S2 operation for max. 3s

General information

These filters remove the PWM for the motors by means of DC mean value formation.

They are designed for a maximum motor supply voltage with a nominal value of 50V and allow a nominal motor current of 1, 3 or 8 ampere.

With DC-motors, the supply line RMS value can be used.

For the proper filter effect, all PWM filters require a 0V connection, which must be connected as short as possible to the ground connection of the motor supply.

Note: The filters of the EFM series are not compatible with MC2.5 controllers.

Typical impedance

Typical impedance describes the attenuation of the filter for compensation of high-frequency interference at the semiconductor output stage.

The motor filters are suitable only for high PWM frequencies.
Lower PWM frequencies increase the power loss.

Details on use of the filter are given in the respective technical manual.

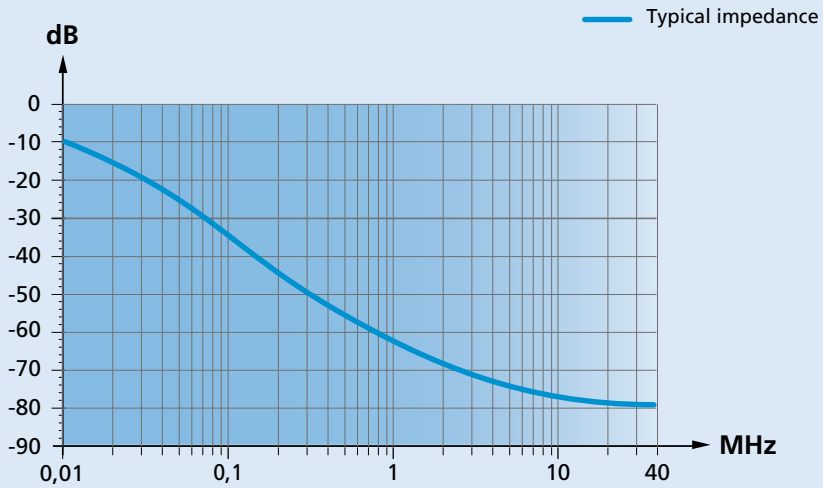

Circuit diagram / Connection diagram

Circuit diagram

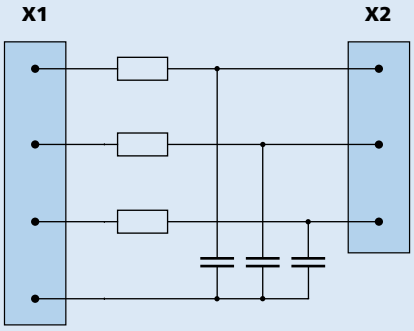

Connection diagram

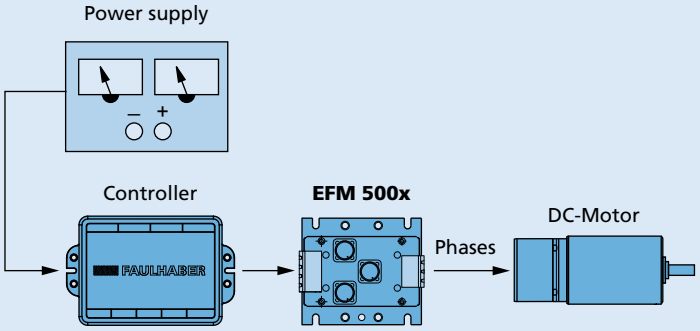

© DR. FRITZ FAULHABER GMBH & CO. KG
Specifications subject to change without notice.
www.faulhaber.com

Dimensional drawing and connection information

Scale reduced

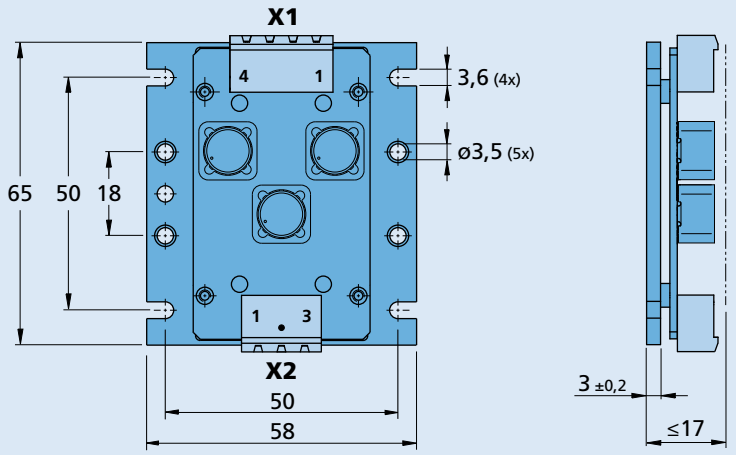

EFM 5001 S / EFM 5003 S

Connection information

X1	EFM 50xx S input
1	Motor C
2	Motor B
3	Motor A
4	GND

X2	Motor output
1	Motor A
2	Motor B
3	Motor C

Dimensional drawing and connection information

Scale reduced

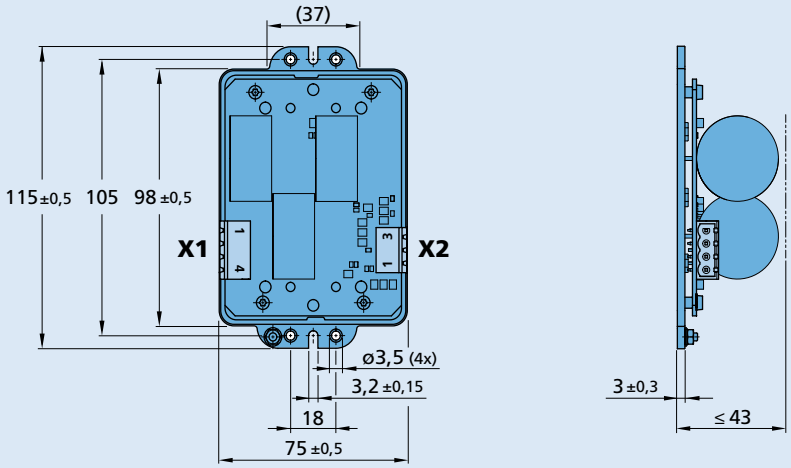

EFM 5008 S

Connection information

X1	EFM 5008 S input
1	Motor C
2	Motor B
3	Motor A
4	GND

X2	Motor output
1	Motor A
2	Motor B
3	Motor C

Product combination

Electronic Filters	Speed Controller	Motion Controller V3.0	Motion Control Systems
EFM 5001 S	SC 1801 P SC 1801 F SC 1801 S		
EFM 5003 S	SC 2402 P SC 2804 S SC 5004 P	MC 5004 P MC 5005 S	
EFM 5008 S	SC 5004 P SC 5008 S	MC 5005 S MC 5010 S	

© DR. FRITZ FAULHABER GMBH & CO. KG
Specifications subject to change without notice.
www.faulhaber.com

Accessories

Electronic filters

EFS 5004 / 3004

		EFS 5004 S	EFS 3004 S	
Power supply	U_P	0 ... 50	0 ... 30	V
Continuous output current	I_{cont}	4		A
Max. peak current [1]	I_{max}	12		A
Operating temperature range		-25 … + 65		°C
Storage temperature range		-25 … + 85		°C
Dimensions (L x W x H)		65 x 58 x 18		mm
Mass		67		g

[1] S2 operation for max. 3s

General information

These filters are special for applications that either cannot use the motor filter (e.g., integrated controllers) or in which the filtering by the ferrite-based motor filters is not sufficient.

Functional principle:

Discharge of common-mode interferences with a common-mode choke, a low-pass filter and capacitors between functional earth and DC power supply.

Typical attenuation

Common-mode attenuation describes the attenuation of the filter for compensation of high-frequency interference at the semiconductor output stage.

Differential-mode attenuation indicates how much current, caused by low motor PWM or high currents, can be attenuated.

Details on use of the filter are given in the respective technical manual.

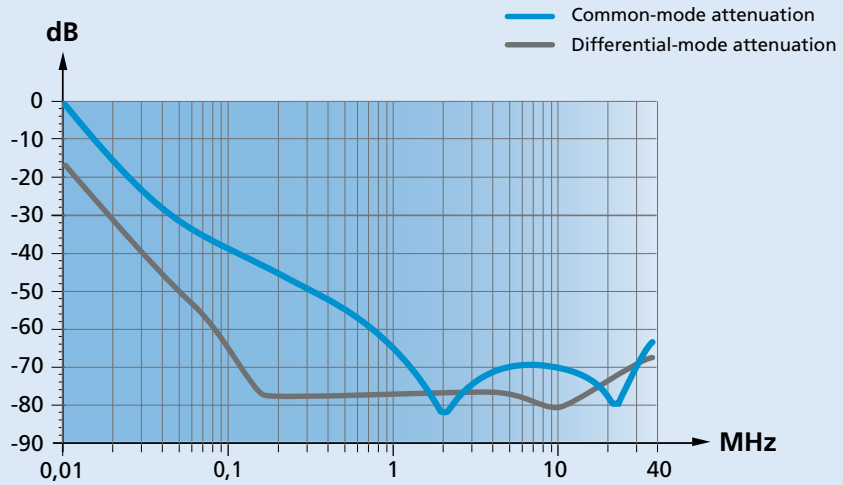

Circuit diagram / Connection diagram

Circuit diagram

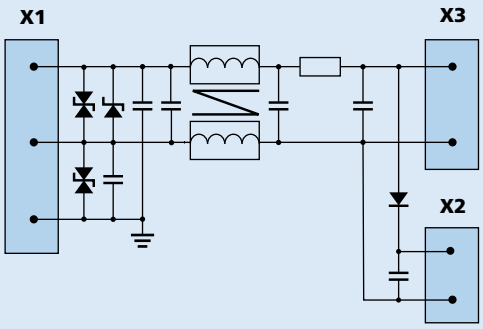

Connection diagram

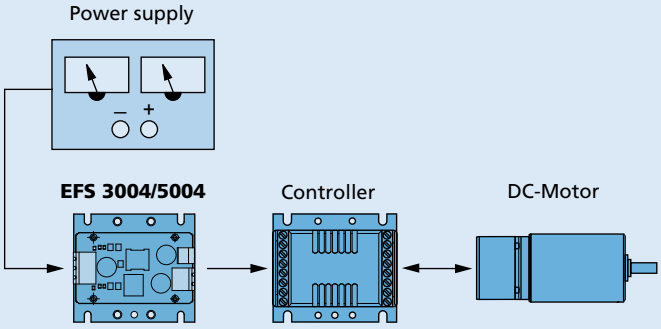

© DR. FRITZ FAULHABER GMBH & CO. KG
Specifications subject to change without notice.
www.faulhaber.com

Dimensional drawing and connection information

Scale reduced

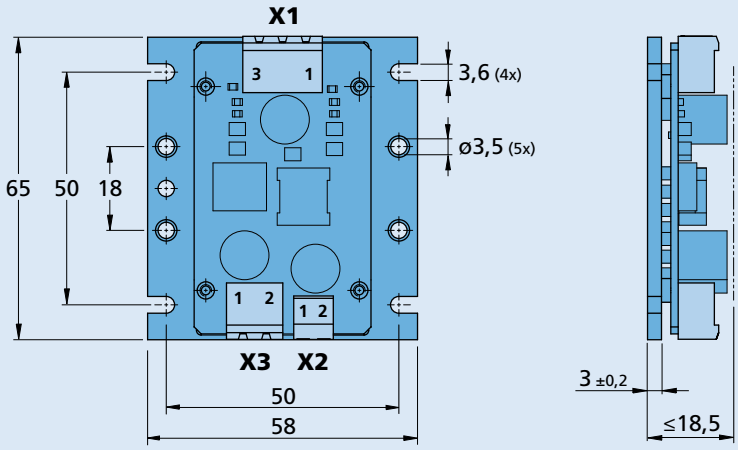

EFS 3004 S / EFS 5004 S

Connection information

No.	X1 Input power supply
1	GND
2	Up
3	PE / FE Housing GND

No.	X2 Electronic power supply
1	GND
2	Up

No.	X3 Motor power supply
1	GND
2	Umot

Product combination

Electronic Filters	Speed Controller	Motion Controller	Motion Control Systems
EFS 3004 S	SC 1801 P SC 1801 F SC 1801 S SC 2402 P SC 2804 S		3242 ... BX4 3268 ... BX4 MCS 3242 ... BX4 MCS 3268 ... BX4 MCS 3274 ... BP4
EFS 5004 S	SC 5004 P SC 5008 S	MC 5004 P MC 5005 S MC 5010 S	MCS 3242 ... BX4 MCS 3268 ... BX4 MCS 3274 ... BP4

© DR. FRITZ FAULHABER GMBH & CO. KG
Specifications subject to change without notice.
www.faulhaber.com

Brakes

Electromagnetically Released System

For combination with
DC-Micromotors
Brushless DC-Servomotors

Series MBZ

Values at 22°C	MBZ		12V	22V	24V	
Supply voltage (DC) ±10%	U_N		12	22	24	V
Resistance	R		24	81	96	Ω
Current	I		0,5	0,27	0,25	A
Power	$P_{2\ max.}$		6	6	6	W
Mechanical response times: [1]						
– Coupling time		13				ms
– Disconnection time		27				ms
Static torque rating [2]		400				mNm
Moment of inertia		10				gcm^2
Max. permissible speed		16 000				min^{-1}
Temperature range: [3]						
– Operating temperature		-5 ... +120				°C
– Storage temperature		-25 ... +120				°C
Mass		50				g

[1] Depending on the requirements, a Switch-off voltage-limitation function can be applied using an anti-parallel diode, varistor or other. However, this will influence the brake switching time.
[2] Under dry operation conditions, absolutely oil-free.
[3] Non condensing atmosphere.

Product combination

Dimensional drawing A	L1 [mm]	Dimensional drawing D	L1 [mm]
2342 ... CR	72,5	4490 ... B	125,2
2642 ... CXR	72,5	4490 ... BS	125,2
2642 ... CR	72,5		
2657 ... CXR	87,5	**Dimensional drawing E**	**L1 [mm]**
2657 ... CR	87,5	3274 ... BP4	104,0
2668 ... CR	98,5		
		Dimensional drawing F	**L1 [mm]**
Dimensional drawing B	**L1 [mm]**	2444 ... B	73,7
3242 ... CR	72,5	3056 ... B	87,5
3257 ... CR	87,5	3564 ... B	98,0
3272 ... CR	102,5		
		Dimensional drawing G	**L1 [mm]**
Dimensional drawing C	**L1 [mm]**	3242 ... BX4 3692	72,5
3863 ... CR	95,0	3268 ... BX4 3692	98,5
3890 ... CR	121,0		

Note: 3242 ... BX4 and 3268 ... BX4 can be combined with Speed Controller or Motion Controller 3.0 only.
For combinations of several components, please contact your responsible sales consultant.
Due to the thermal losses of the brake the continuous power of the combination out of motor and brake might be reduced compared to the motor datasheet.

Features

The brakes are designed as DC operated permanentmagnet single-surface brakes characterised by the fact that the braking effect is produced by a permanentmagnetic field (electromagnetically released system). This means that the required braking force is generated when voltage is removed.

In order to neutralise the braking effect, the permanentmagnetic field is counteracted by an opposing electromagnetic field.

The brakes are intended only for use as holding brakes (unsuitable for braking rotating motor shaft).

© DR. FRITZ FAULHABER GMBH & CO. KG
Specifications subject to change without notice.
www.faulhaber.com

Option, Cable and connection information

Example product designation: **3242G024CR MBZ22V**

Option	Type	Description

Connection

Function	Colour
Brakes +	red
Brakes -	blue

Standard cable
Single wires, material FEP

Dimensional drawing A

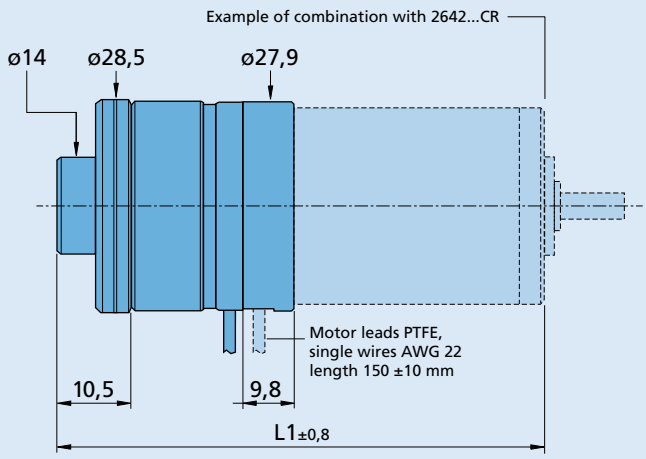

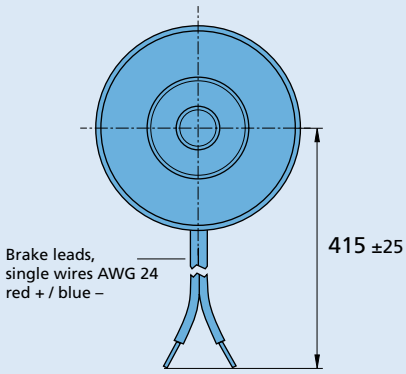

MBZ

Dimensional drawing B

Scale reduced

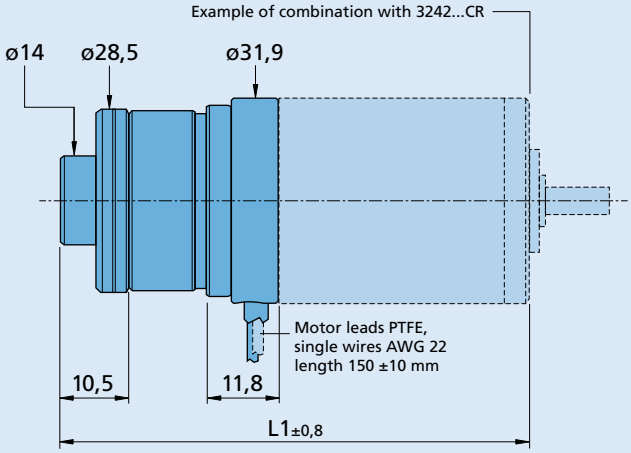

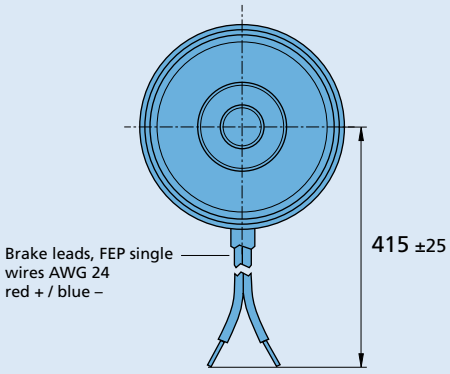

MBZ

© DR. FRITZ FAULHABER GMBH & CO. KG
Specifications subject to change without notice.
www.faulhaber.com

Dimensional drawing C

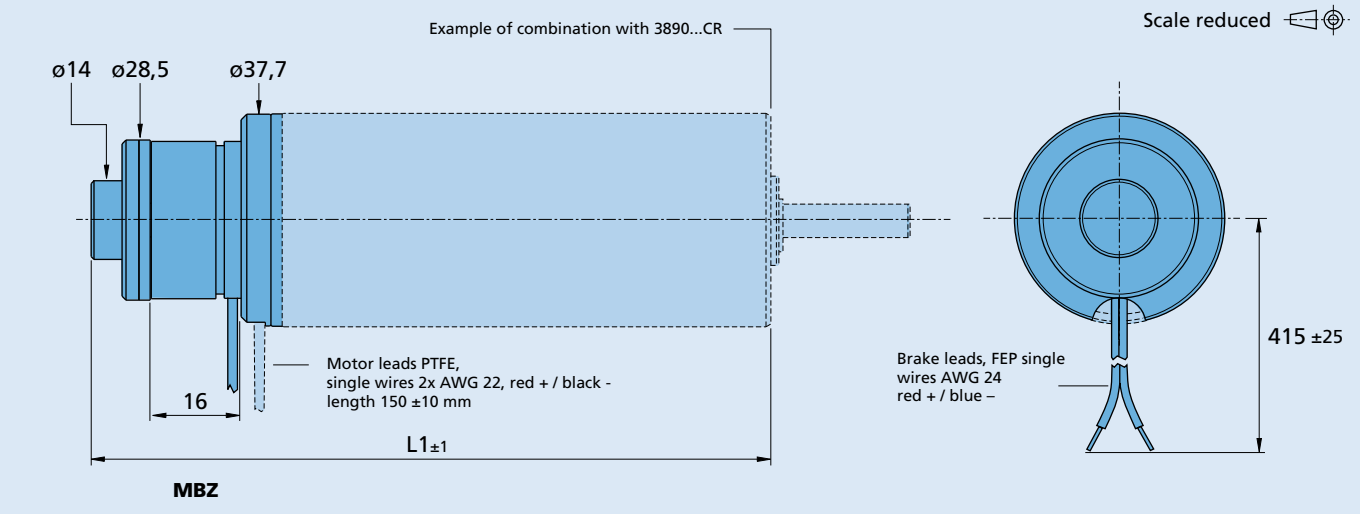

Dimensional drawing D

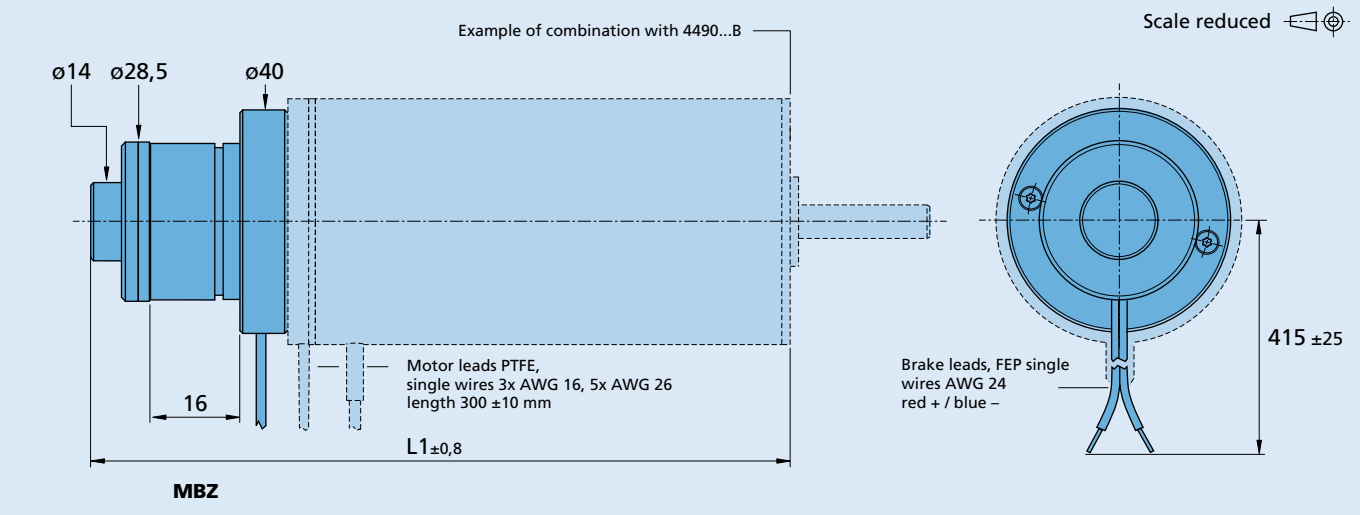

Dimensional drawing E

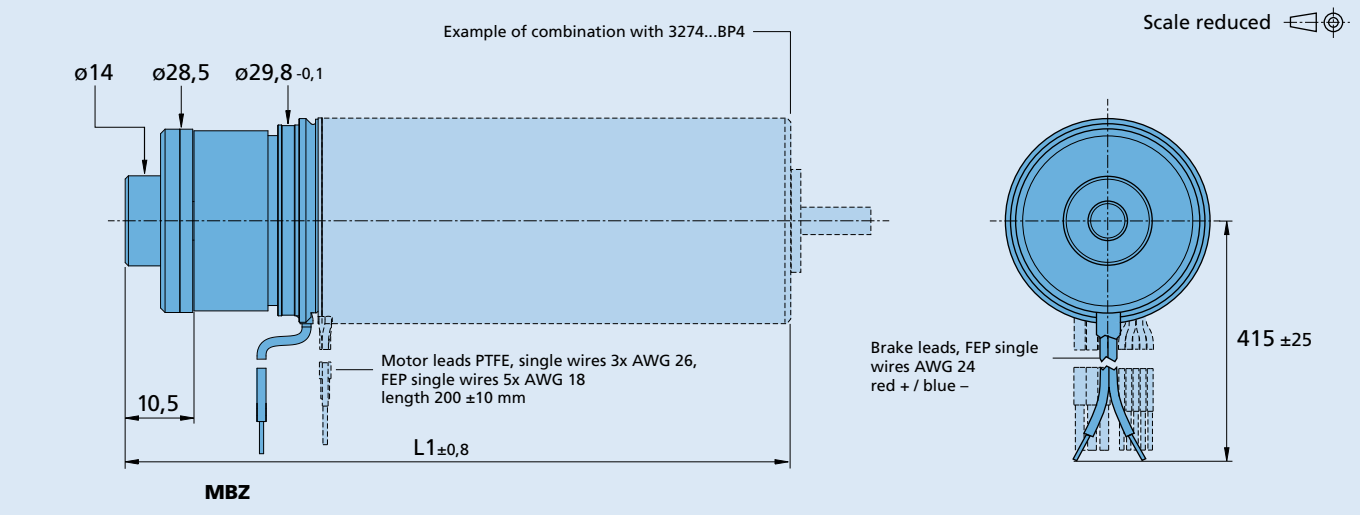

© DR. FRITZ FAULHABER GMBH & CO. KG
Specifications subject to change without notice.
www.faulhaber.com

Dimensional drawing F

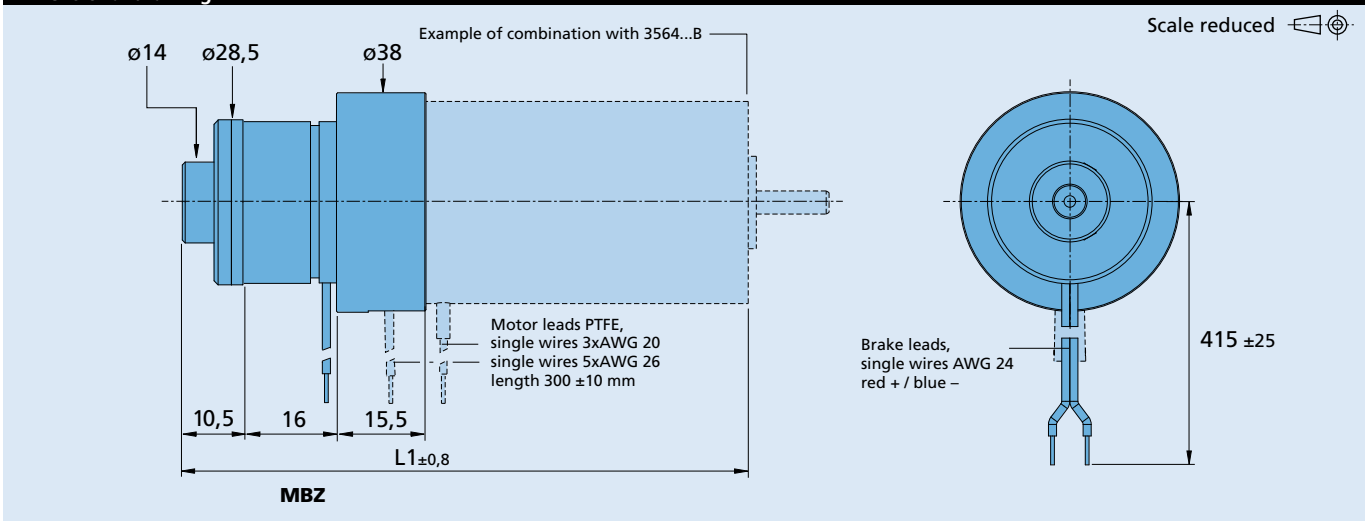

Dimensional drawing G

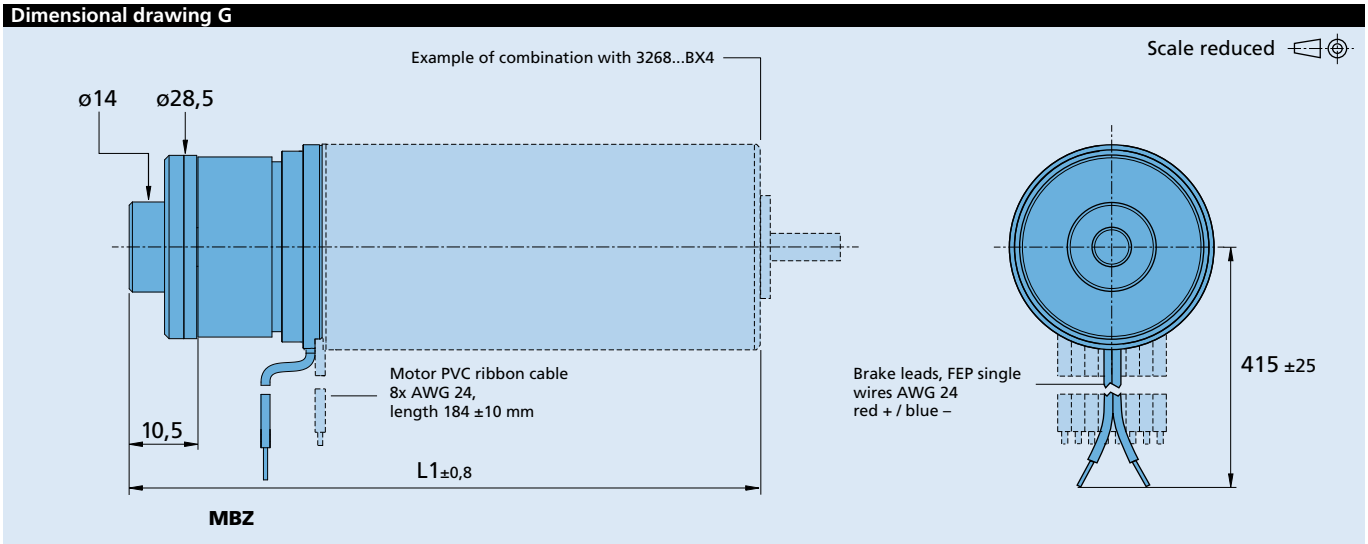

© DR. FRITZ FAULHABER GMBH & CO. KG
Specifications subject to change without notice.
www.faulhaber.com

NEW

FAULHABER

Brakes

Electromagnetically Released System

For combination with
Brushless DC-Servomotors

Series PMB32

Values at 22°C	PMB32		12V	24V	
Rated voltage (DC) ±10% smoothed	U_N		12	24	V
Resistance	R		50	100	Ω
Current	I		0,48	0,24	A
Rated power	P_n		6	6	W
Mechanical response times: [1]					
– Coupling time		13			ms
– Disconnection time		24			ms
Rated holding torque [2]		400			mNm
Moment of inertia		19			gcm^2
Max. permissible speed (without braking)		10 000			min^{-1}
Temperature range: [3]					
– Operating temperature		-15 ... +120			°C
– Storage temperature		-15 ... +120			°C
Mass		100			g

[1] Depending on the requirements, a Switch-off voltage-limitation function can be applied using an anti-parallel diode, varistor or other. However, this will influence the brake switching time.
[2] Under dry operation conditions, absolutely oil-free.
[3] Non condensing atmosphere.

Product combination

Dimensional drawing A	L1 [mm]
3216 ... BXTH	50,9
4221 ... BXTH	56,2

Dimensional drawing B	L1 [mm]
3216 ... BXTH -IEF3	56,4
4221 ... BXTH -IEF3	61,4

Note: For combinations of several components, please contact your responsible sales consultant.
Due to the thermal losses of the brake the continuous power of the combination out of motor and brake might be reduced compared to the motor datasheet.

Features

The brakes are designed as DC operated permanentmagnet brakes (electromagnetically released system).

The brakes are intended only for use as holding brakes (unsuitable for braking rotating motor shaft).

Caution
Brake gets hot during operation - take protection measures.

To maintain and to reach rated holding torque a break-in process within the application is recommended.

© DR. FRITZ FAULHABER GMBH & CO. KG
Specifications subject to change without notice.
www.faulhaber.com

Option, Cable and connection information

Example product designation: **3216W024BXTH-IEF3 PMB3224V**

Option	Type	Description

Connection

Function	Colour
Brakes +	red
Brakes -	blue

Standard cable
AWG24 FEP

Dimensional drawing A

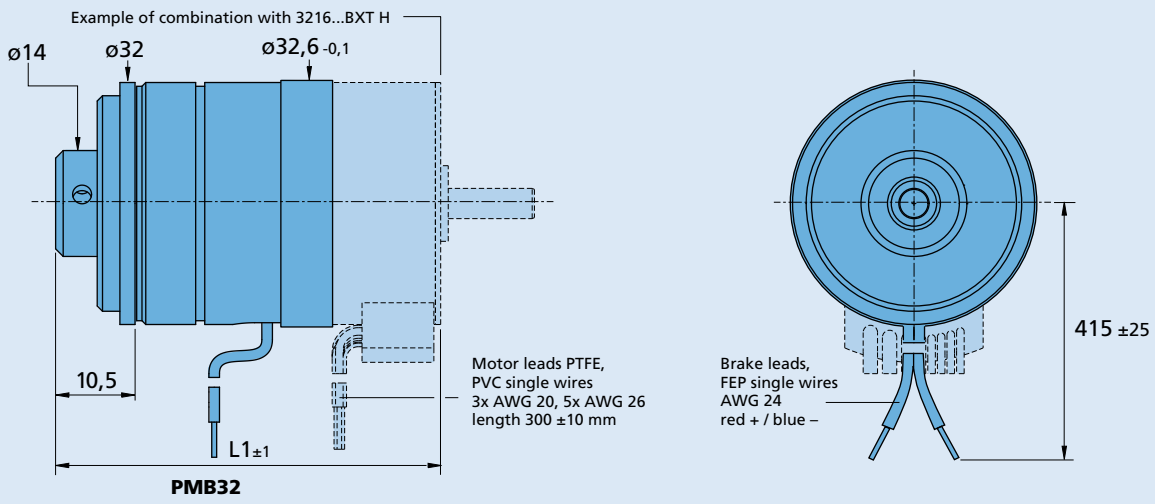

Dimensional drawing B

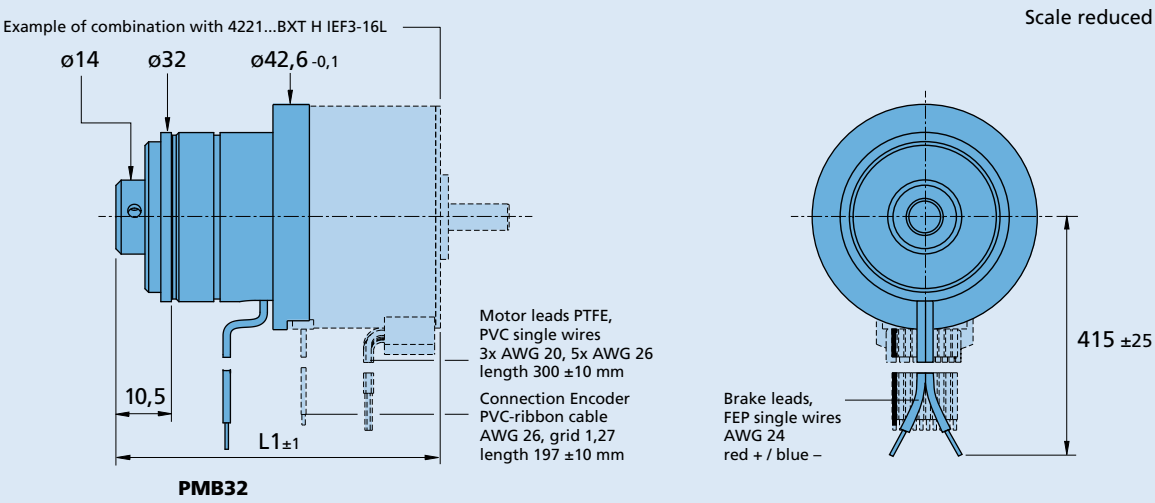

© DR. FRITZ FAULHABER GMBH & CO. KG
Specifications subject to change without notice.
www.faulhaber.com

Accessories

Braking chopper

Series BC 5004

		BC 5004	
Power supply		16 ... 50	V
Switching threshold	V_{th}	28 / 56	V
Max. continuous power losses [1]	P_{cont}	10	W
Max. peak current [1]		10	A
Total standby current, max.		20	mA
Temperature range:			
– Operating temperature		-25 … +60	°C
– Storage temperature		-25 … +85	°C
– Dimensions (L x W x H)		65 x 58 x 22	mm
– Mass		160	g

[1] at 22°C ambient temperature

General information

The function of the braking chopper BC 5004 is to limit the supply voltage of 4 quadrant controllers and other ancillary devices such as programming adapters. When braking the drive, a voltage is generated and these controllers can feed this voltage back into the power supply.

Typical power supplies do not have the ability to absorb this energy and this can lead to an overvoltage and damage to the power supply. The braking chopper limits this voltage to an allowable level. The resulting energy losses are converted into heat by the braking resistors. In this way, damage to the power supply and other devices can be prevented.

The braking chopper can be used with 24V and 48V power supplies. The voltage limit can be adjusted using the jumper included with the braking chopper.

Description of jumper setting:

Mode 24V	Jumper between IN 1 and IN 2 installed for 24V power supply, switching threshold V_{th} 28V
Mode 48V	Jumper between IN 1 and IN 2 **not** installed for 48V power supply, switching threshold V_{th} 56V

Status description:

The LED's indicate the status of the braking chopper.

LED A (green), LED B (red)

	LED A	LED B	LED A	LED B
Mode	24V		48V	
Not active	On	Off	On	On
Active	Blinking	Off	Blinking	On
Error	On	Blinking	On	Blinking

"Not active"	Switching threshold not reached
"Active"	Switching threshold exceeded; braking chopper limitation on
"Error"	Overload; braking chopper limitation off

Connection diagram

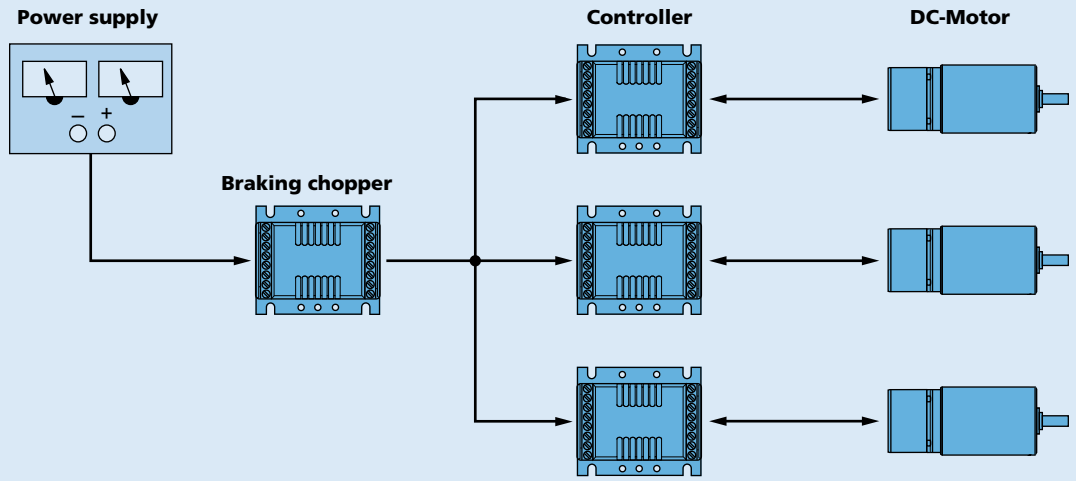

For detailed information regarding FAULHABER accessories please refer to the instruction manuals.

Edition 2020 Feb. 18

© DR. FRITZ FAULHABER GMBH & CO. KG
Specifications subject to change without notice.

www.faulhaber.com

Dimensional drawing

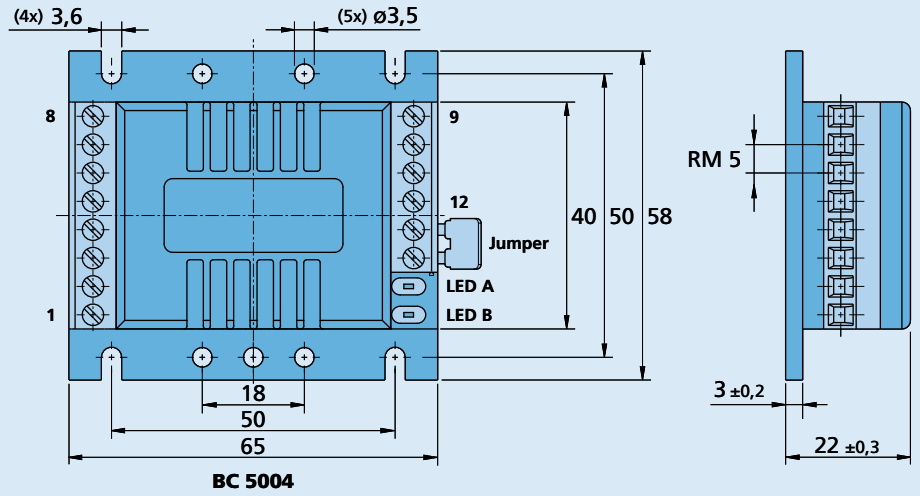

Scale reduced

Pin assignment

No.	Connection
1	GND
2	GND
3	GND
4	GND
5	U_{mot}
6	U_{mot}
7	U_{mot}
8	U_{mot}
9	U_{mot}
10	U_{mot}
11	GND
12	GND
13	IN 1
14	IN 2

© DR. FRITZ FAULHABER GMBH & CO. KG
Specifications subject to change without notice.
www.faulhaber.com